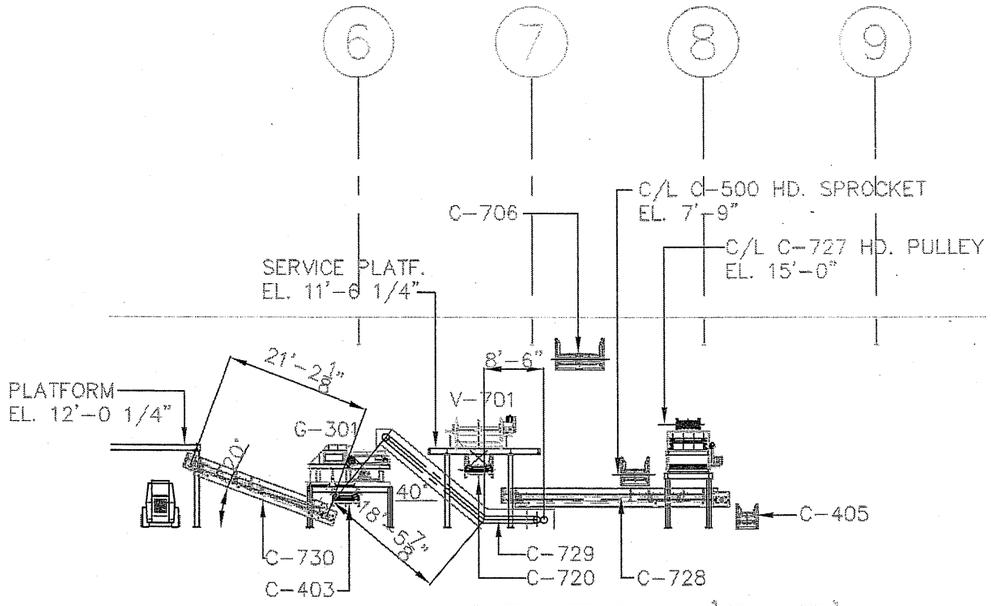

SECTION 'E-E'

"DRAWING IN PROGRESS - UNDER REVIEW"

PRELIMINARY TO REV. C 6/2/06

NOT FOR CONSTRUCTION

REV	DESCRIPTION	DATE BY CHK
C	ISSUED FOR BID	5-22-06 RS

PROPRIETARY DATA
THIS DOCUMENT IS THE PROPERTY OF ENVIRO-SERVICES & CONSTRUCTORS, INC. AND CONTAINS CONFIDENTIAL INFORMATION. ANY REPRODUCTION OR UNAUTHORIZED USE WITHOUT WRITTEN CONSENT OF ENVIRO-SERVICES & CONSTRUCTORS, INC. WILL BE SUBJECT TO PROSECUTION.

RRT Design & Construction
ENGINEERING • ARCHITECTURE • CONSTRUCTION

RRT DESIGN & CONSTRUCTION
A Service of Enviro-Services & Constructors, Inc.

CITY OF SUNNYVALE
SUNNYVALE SMART STATION RETROFIT

PROCESS EQUIPMENT
SECTION 'E-E'

	BY	DATE
DRAWN	RS	5/22/06
CHECKED	NE	
DESIGNED	RS	5/22/06
APPROVED		

PROJ. No: 559-002
SCALE: 3/32" = 1'-0"
DWG. NO: PM-7
C
CAD FILE: Review Issue

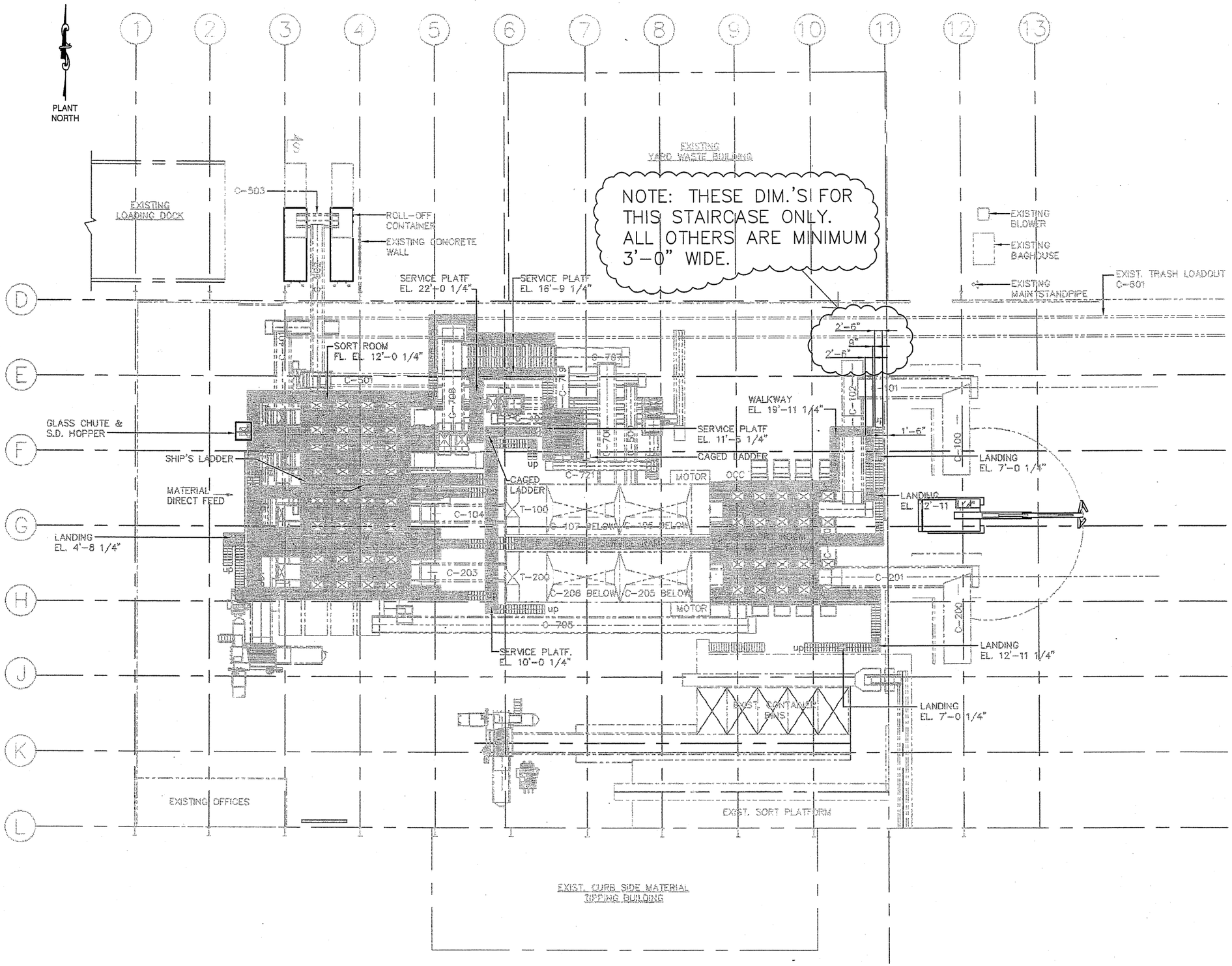

SORT & SERVICE PLATFORM GENERAL ARRANGEMENT

"DRAWING IN PROGRESS - UNDER REVIEW"
PRELIMINARY TO REV. C 5/23/06
NOT FOR CONSTRUCTION

REV	DESCRIPTION	DATE BY CHK
C	ISSUED FOR BID	

RRT DESIGN & CONSTRUCTION
A Service of Enviro-Services & Constructors, Inc.

CITY OF SUNNYVALE
SUNNYVALE SMART STATION RETROFIT
Sunnyvale, CA

SORT ROOM & SERVICE PLATFORM GENERAL ARRANGEMENT

PROPRIETARY DATA
THIS DOCUMENT IS THE PROPERTY OF ENVIRO-SERVICES & CONSTRUCTORS, INC. AND CONTAINS CONFIDENTIAL INFORMATION. ANY REPRODUCTION OR UNAUTHORIZED USE WITHOUT WRITTEN CONSENT OF ENVIRO-SERVICES & CONSTRUCTORS, INC. WILL BE SUBJECT TO PROSECUTION.

	BY	DATE
DRAWN	RS	5/16/06
CHECKED	NE	5/16/06
DESIGNED	RS	5/16/06
APPROVED		

PROJ. No: 559-002 SCALE: 1/16" = 1'-0"
DWG. NO: PM-8 C
CAD FILE: Traffic Flow

RRT Design & Construction
ENGINEERING•ARCHITECTURE•CONSTRUCTION

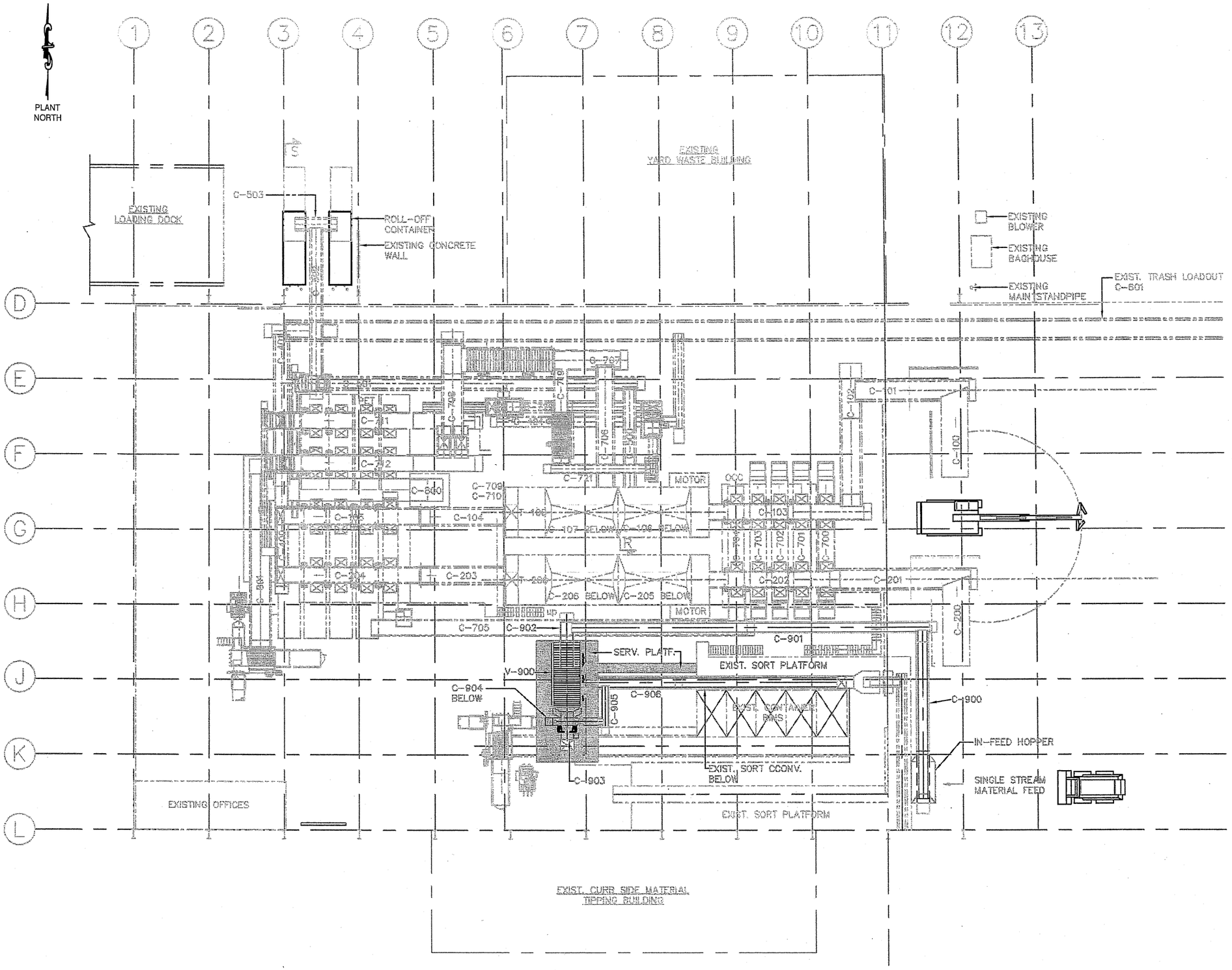

OPTIONAL SINGLE STREAM EQUIPMENT

"DRAWING IN PROGRESS - UNDER REVIEW"
PRELIMINARY TO REV. C 5/23/06
NOT FOR CONSTRUCTION

RRT DESIGN & CONSTRUCTION
A Service of Enviro-Services & Constructors, Inc.

CITY OF SUNNYVALE
SUNNYVALE SMART STATION RETROFIT
Sunnyvale, CA

REV	DESCRIPTION	DATE BY CHK
C	ISSUED FOR BID	

OPTIONAL SINGLE STREAM EQUIPMENT
GENERAL ARRANGEMENT

PROPRIETARY DATA
THIS DOCUMENT IS THE PROPERTY OF ENVIRO-SERVICES & CONSTRUCTORS, INC. AND CONTAINS CONFIDENTIAL INFORMATION. ANY REPRODUCTION OR UNAUTHORIZED USE WITHOUT WRITTEN CONSENT OF ENVIRO-SERVICES & CONSTRUCTORS, INC. WILL BE SUBJECT TO PROSECUTION.

	BY	DATE
DRAWN	RS	5/16/06
CHECKED	NE	5/16/06
DESIGNED	RS	5/16/06
APPROVED		

PROJ. No: 559-002 SCALE: 1/16" = 1'-0"
DWG. NO: PM-9 C
CAD FILE: Traffic Flow

RRT Design & Construction
ENGINEERING • ARCHITECTURE • CONSTRUCTION

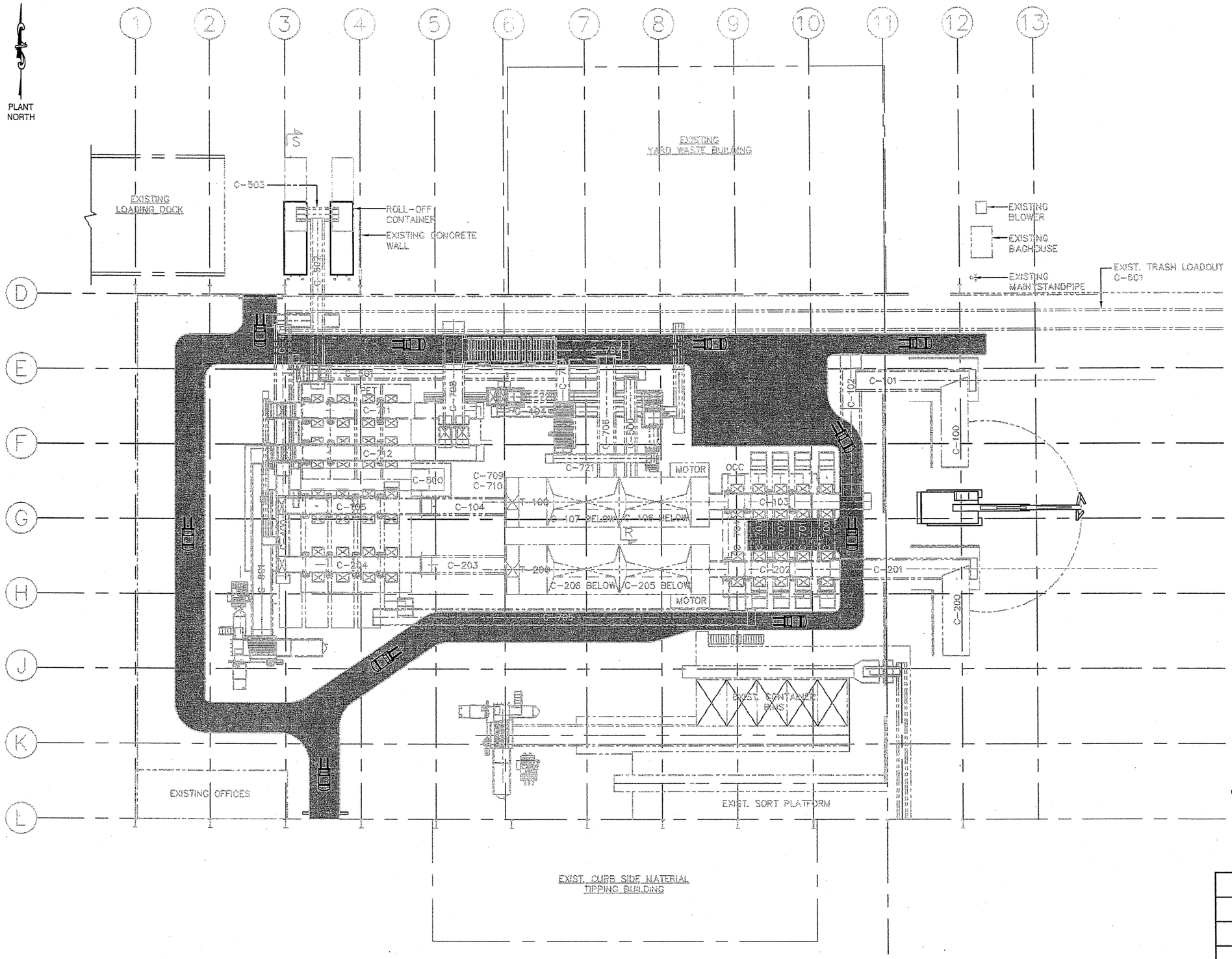

"DRAWING IN PROGRESS - UNDER REVIEW"
PRELIMINARY TO REV. C 5/23/06
NOT FOR CONSTRUCTION

MOBILE EQUIPMENT ACCESS AISLE

REV	DESCRIPTION	DATE	BY	CHK
C	ISSUED FOR BID			

RRT DESIGN & CONSTRUCTION
A Service of Enviro-Services & Constructors, Inc.

CITY OF SUNNYVALE
SUNNYVALE SMART STATION RETROFIT
Sunnyvale, CA

MOBILE EQUUIPMENT ACCESS AISLE

PROPRIETARY DATA
THIS DOCUMENT IS THE PROPERTY OF ENVIRO-SERVICES & CONSTRUCTORS, INC. AND CONTAINS CONFIDENTIAL INFORMATION. ANY REPRODUCTION OR UNAUTHORIZED USE WITHOUT WRITTEN CONSENT OF ENVIRO-SERVICES & CONSTRUCTORS, INC. WILL BE SUBJECT TO PROSECUTION.

RRT Design & Construction
ENGINEERING • ARCHITECTURE • CONSTRUCTION

	BY	DATE
DRAWN	RS	5/16/06
CHECKED	NE	5/16/06
DESIGNED	RS	5/16/06
APPROVED		

PROJ. No: 559-002 SCALE: 1/16" = 1'-0"
DWG. NO: PM-10 C
CAD FILE: Traffic Flow

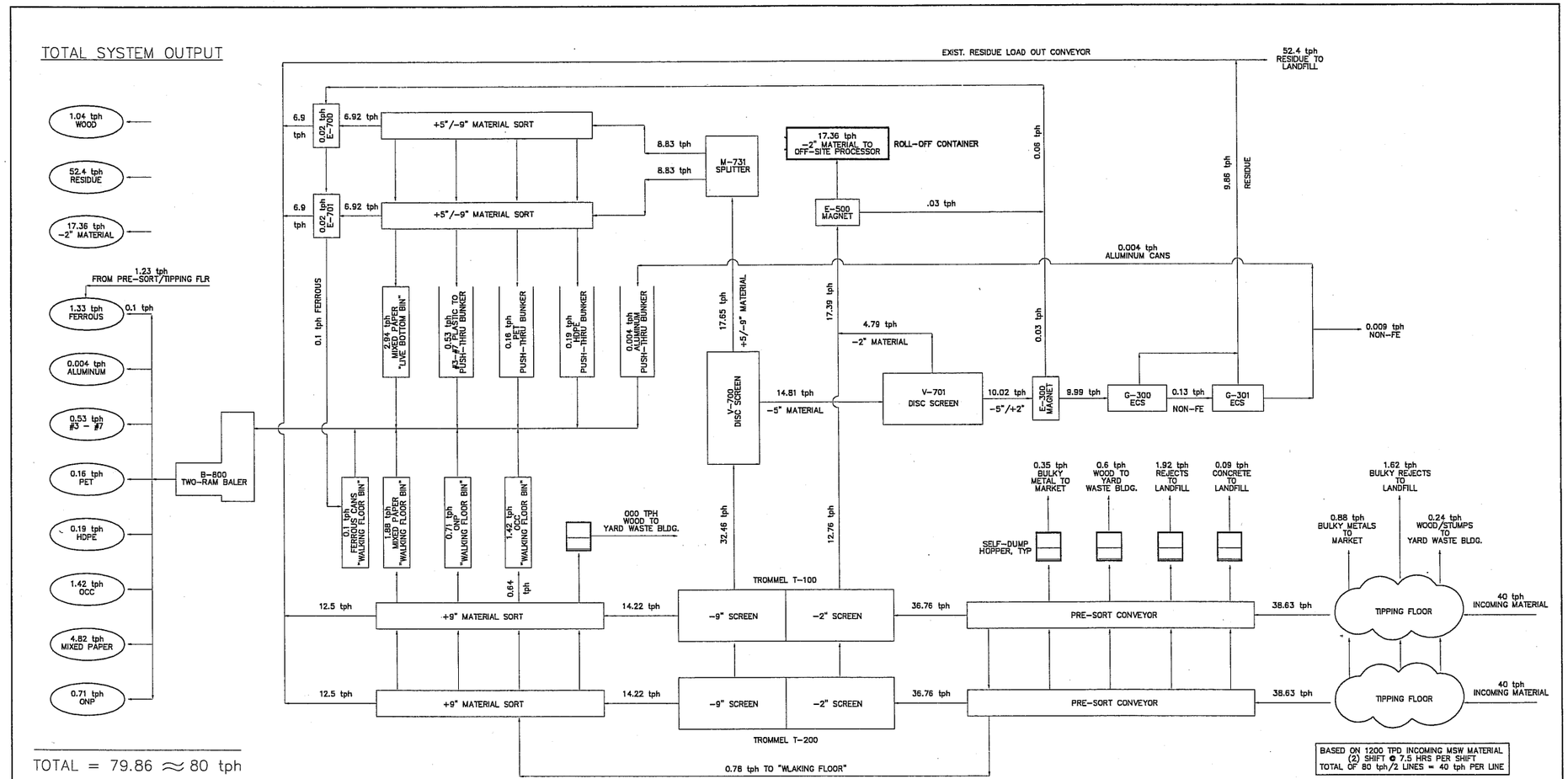

ESTIMATED MASS FLOW IS BASED ON THE WASTE COMPOSITION FURNISHED BY THE CITY OF SUNNYVALE.

MASS BALANCE BREAKDOWN		
MATERIAL	EST. tph	PERCENT
-2" MATERIAL	17.4	22%
RECYCLABLE MATERIAL	10.2	12%
RESIDUE	52.4	66%
TOTALS	80	100%

MASS BALANCE UNDER REVIEW
DRAWING IN PROGRESS
PRELIMINARY TO REV 'C' – 5/30/06
NOT FOR CONSTRUCTION

RRT Engineering, LLC.
An Affiliate of Enviro-Services & Constructors, Inc.

CITY OF SUNNYVALE
MATERIAL RECOVERY FACILITY
CALIFORNIA

REV	DESCRIPTION	DATE	BY	CHK
C	ISSUED FOR BID	5-29-06	RS	

PROCESS SYSTEM
MATERIAL FLOW & MASS BALANCE

PROPRIETARY DATA
THIS DOCUMENT IS THE PROPERTY OF RRT ENGINEERING, LLC, AND CONTAINS CONFIDENTIAL INFORMATION. ANY REPRODUCTION OR UNAUTHORIZED USE WITHOUT WRITTEN PERMISSION FROM RRT ENGINEERING, LLC. WILL BE SUBJECT TO PROSECUTION.

	BY	DATE
DRAWN	RS	5-29-06
CHECKED		
DESIGNED	RS	5-29-06
APPROVED	:	
APPROVED	:	

PROJ. No: 559-002 SCALE: NO SCALE
DWG. NO: PM-11 C
CAD FILE: Process Flow.dwg
SHEET SIZE: D-24x36 REV

RRT Engineering, LLC.
110 Rawlins Road
Medford, NJ 08107
phone 609-654-1900
fax 609-654-0464

SMaRT STATION
EQUIPMENT REPLACEMENT
PROJECT SCHEDULE

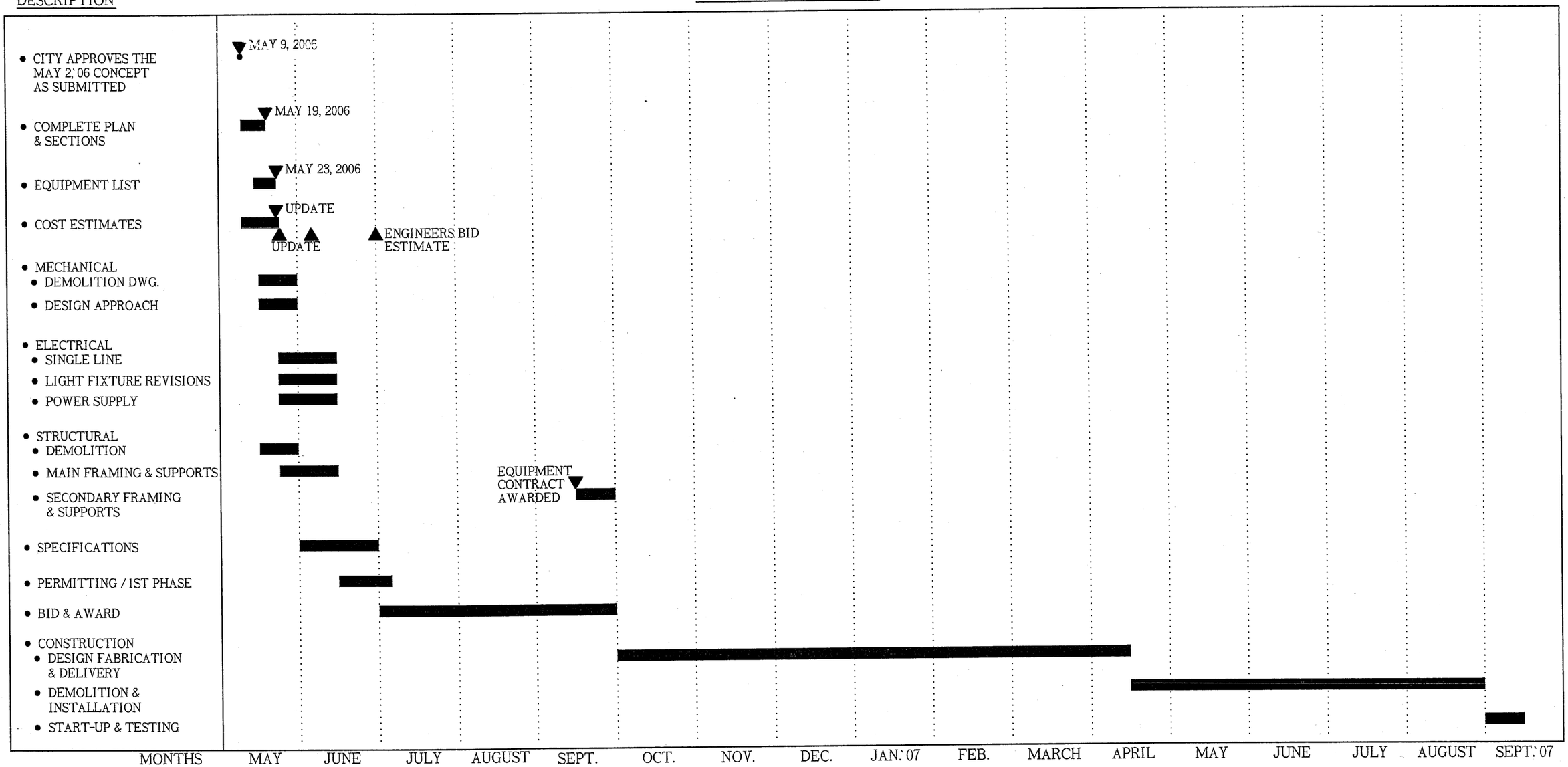

i:\Sunnyvale Study\CAD\EQ-REPLACEMENTSCHEDULE.dwg Jun 05, 2006 - 3:21pm