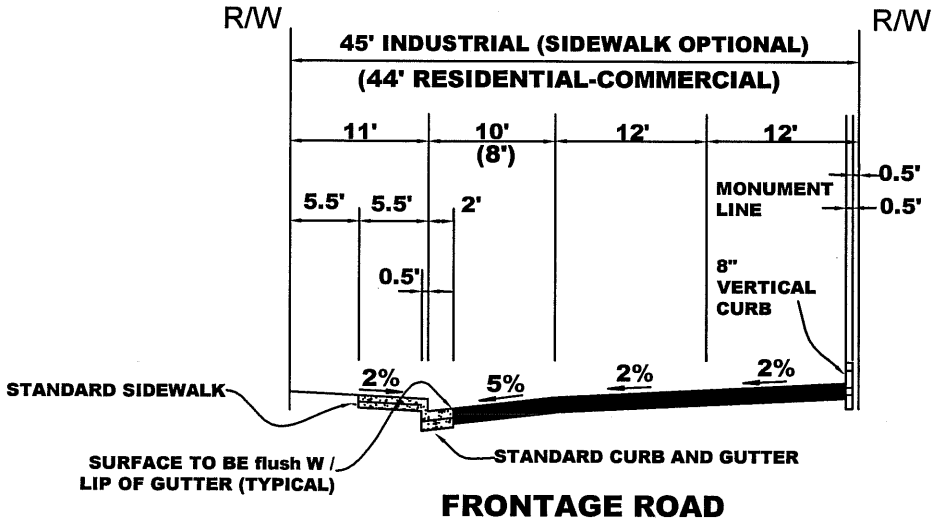

FRONTAGE ROAD

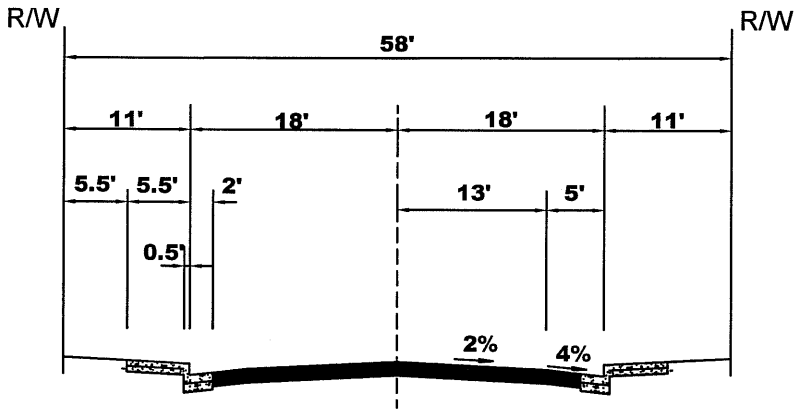

MINOR STREET - SINGLE FAMILY RESIDENTIAL

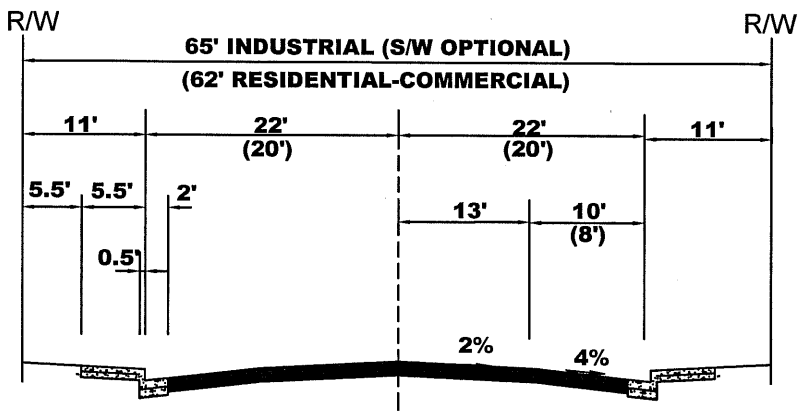

TWO LANE STREET

NOTE:

PAVEMENT SECTIONS TO BE MIN. 6" DEEP LIFT ASPHALTIC CONCRETE, UNLESS OTHERWISE SPECIFIED.

2 - LANE STREET SECTIONS	APPROVED BY:	
	DATE : JUNE 30, 2006	DWG. 1C

2006 STANDARD DETAILS

4 & 6 LANES STREET SECTIONS

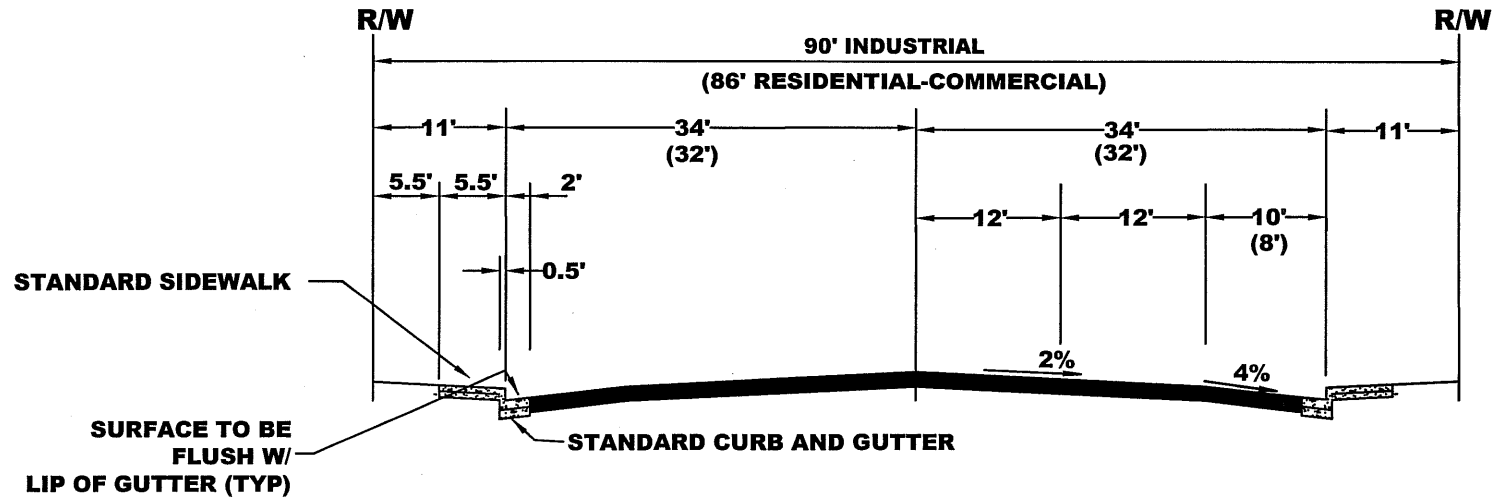

FOUR LANE STREET

NO SCALE

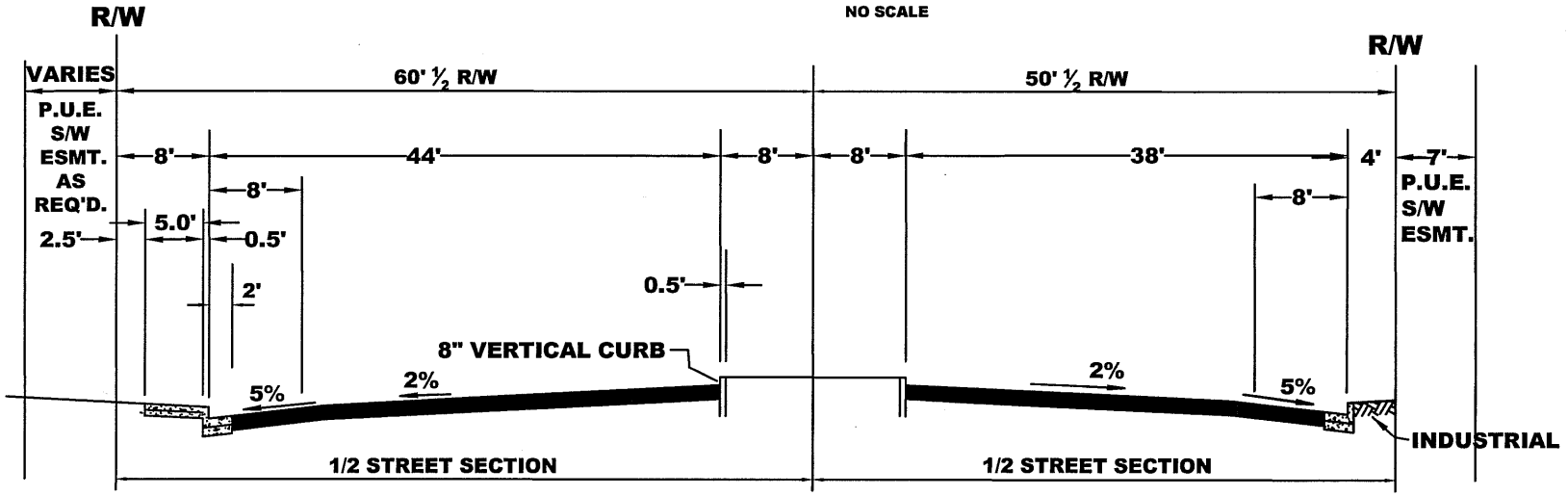

SIX LANE STREET

NO SCALE

NOTE:

1. PAVEMENT SECTIONS TO BE MIN. 6" DEEPLIFT ASPHALTIC CONCRETE, UNLESS OTHERWISE SPECIFIED. PAVEMENT DESIGN REQUIRED
2. SIDEWALK IN COMMERCIAL / INDUSTRIAL TO BE 10'

DATE : JUNE 30, 2006

DWG. 2C

APPROVED BY:

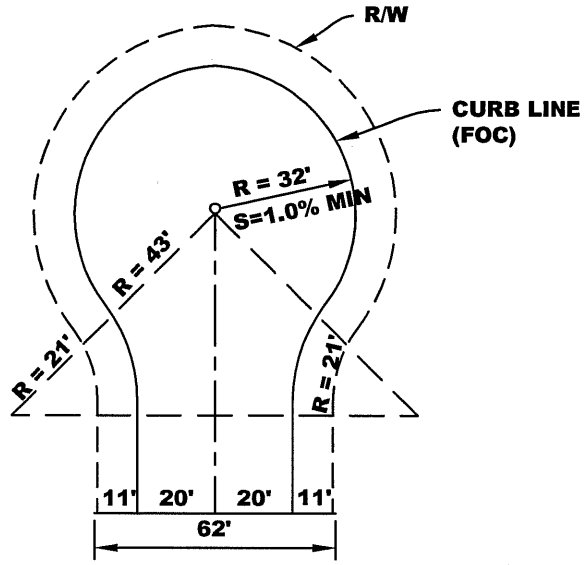

RESIDENTIAL

CURB RADIUS = 32'

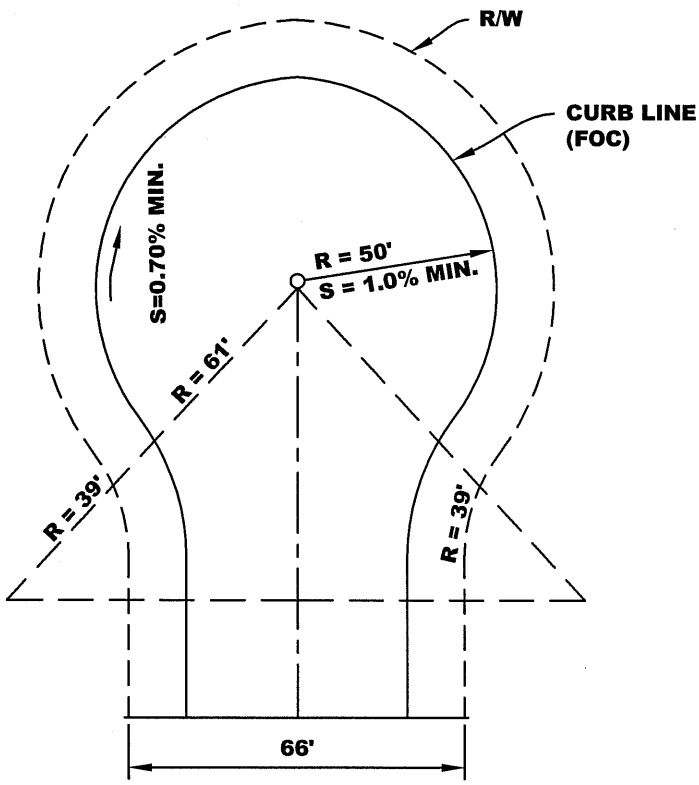

INDUSTRIAL

CURB RADIUS = 50'

CUL DE SAC DETAILS

APPROVED BY:

DATE : JUNE 30, 2006

DWG. 3C

2006 STANDARD DETAILS

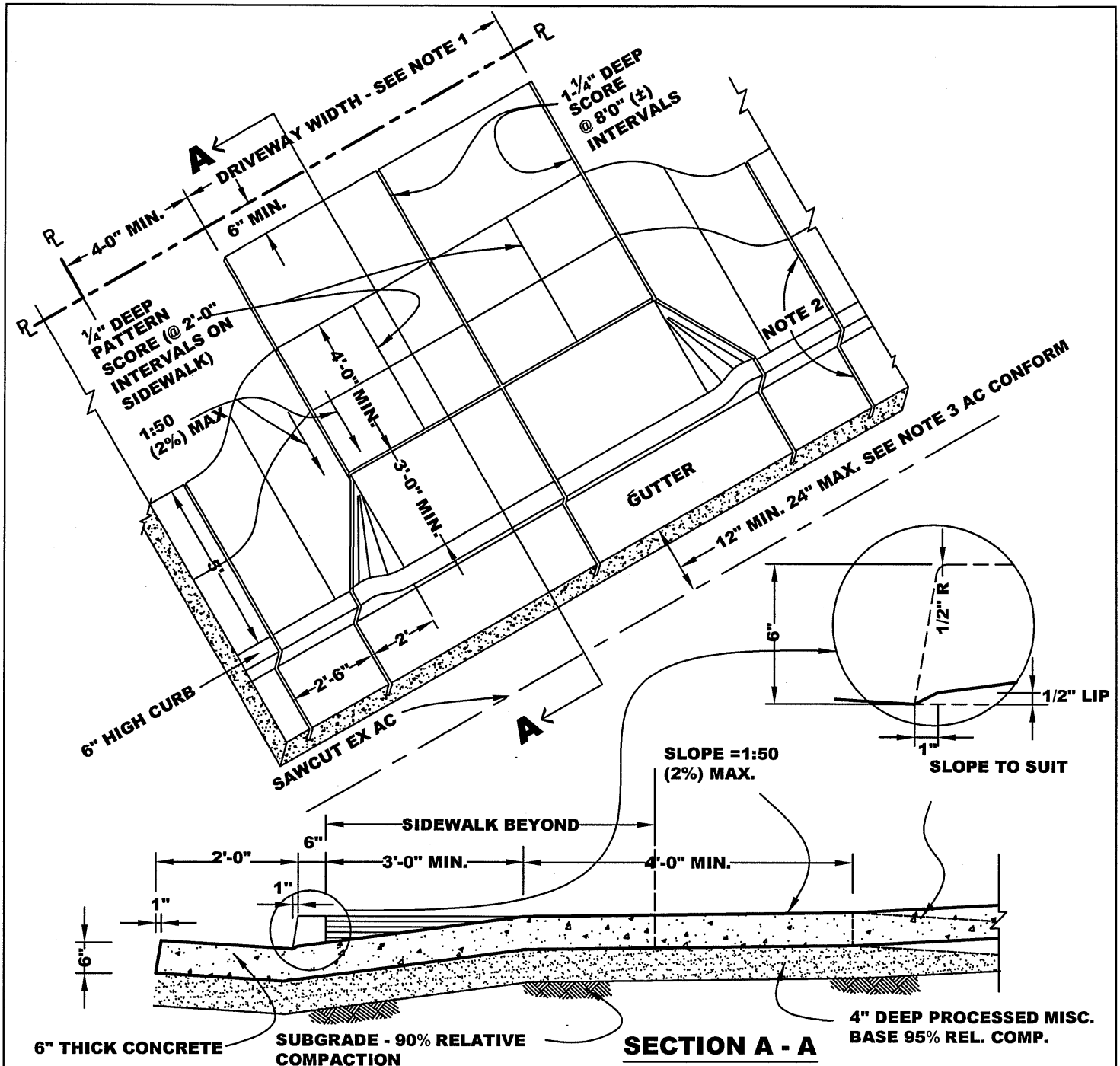

SECTION A - A

NOTES:

1. DRIVEWAY WIDTH. SINGLE 10'-0" MIN,16'0" MAX. DOUBLE 18'-0" MIN, 24'-0" MAX. WIDTH INCREMENTS SHALL BE IN MULTIPLES OF 2'-0". NOTE THAT FOR REQUIRED FIRE LANES, MINIMUM WIDTHS MAY BE GREATER.
2. IF CONSTRUCTING NEW DRIVEWAY IN EXISTING CURB, GUTTER & SIDEWALK, SAWCUT TO NEAREST SCORED JOINT OR CONTROL JOINT.
3. IF CONSTRUCTING NEW DRIVEWAY IN EXISTING CURB, GUTTER & SIDEWALK, SAWCUT AC & REMOVE. REPLACE WITH NEW AC AFTER CONSTRUCTION OF DRIVEWAY. AC THICKNESS = 6" MIN.; 12" MAX. ON ARTERIALS
4. LIGHT BROOM FINISH ALL SURFACES. USE 1PT LAMPBLACK PER CY
5. MATCH EXISTING SCORE PATTERNS OR EXISTING JOINTS IN SIDEWALK. SOME VARIATION IN DIMENSIONING IS PERMITTED, PROVIDED SPECIFIED MAX / MIN SLOPES/DIMENSIONS ARE NOT VIOLATED.
6. IF RIGHT - OF - WAY WIDTH IS INSUFFICIENT TO ALLOW THE USE OF THIS DETAIL, STANDARD DETAIL 5C - 2 MAY BE USED.

RESIDENTIAL DRIVEWAY APPROACH IN MONOLITHIC CURB, GUTTER AND SIDEWALK. (1 OF 2)	APPROVED BY:	
	DATE: JUNE 30, 2006	DWG. 5C-1

2006 STANDARD DETAILS

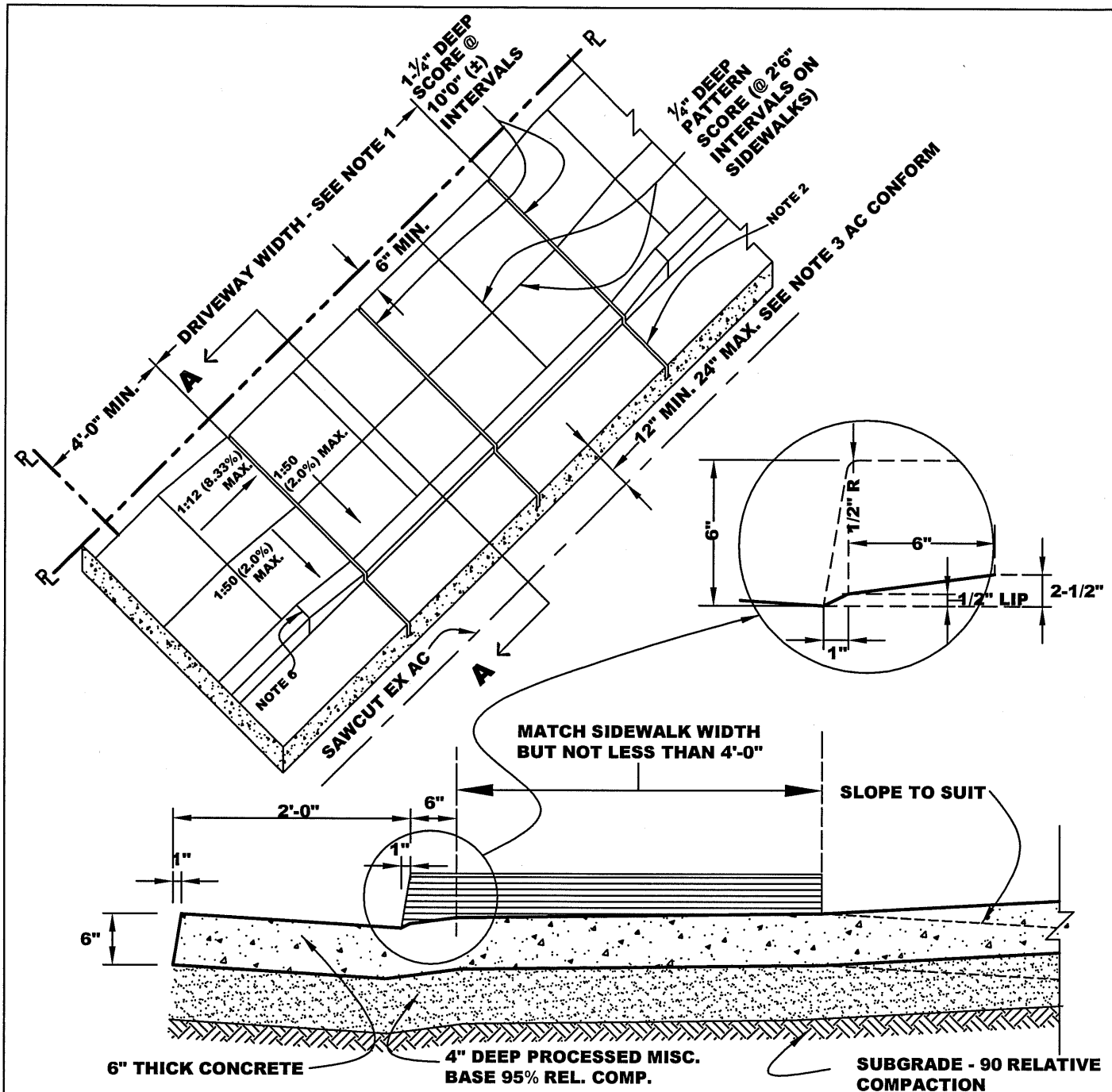

SECTION A - A

NOTES:

1. DRIVEWAY WIDTH. SINGLE 10'-0" MIN,15'-0" MAX. DOUBLE 17'-6" MIN, 25'-0" MAX. WIDTH INCREMENTS SHALL BE IN MULTIPLES OF 2'-6".NOTE THAT FOR REQUIRED FIRE LANES, MINIMUM WIDTHS MAY BE GREATER.
2. IF CONSTRUCTING NEW DRIVEWAY IN EXISTING CURB, GUTTER & SIDEWALK, SAWCUT TO NEAREST SCORED JOINT OR CONTROL JOINT.
3. IF CONSTRUCTING NEW DRIVEWAY IN EXISTING CURB, GUTTER & SIDEWALK, SAWCUT AC & REMOVE. REPLACE WITH NEW AC AFTER CONSTRUCTION OF DRIVEWAY. AC THICKNESS = 6" MIN.; 12" MAX. ON ARTERIALS
4. LIGHT BROOM FINISH ALL SURFACES. USE 1 PT LAMPBLACK PER CY
5. MATCH EXISTING SCORE PATTERNS OR EXISTING JOINTS IN SIDEWALK. SOME VARIATION IN DIMENSIONING IS PERMITTED, PROVIDED SPECIFIED MAX / MIN SLOPES/DIMENSIONS ARE NOT VIOLATED.
6. MIN. OF 4'-0" TO EDGE OF ADJACENT DRIVEWAY APPROACH.
7. THIS STANDARD DETAIL IS TO BE USED ONLY IF RIGHT - OF - WAY WIDTH IS INSUFFICIENT TO ALLOW THE USE OF STANDARD DETAIL 5C - 1.

RESIDENTIAL DRIVEWAY APPROACH IN MONOLITHIC CURB, GUTTER AND SIDEWALK. (2 OF 2)	APPROVED BY:	
	DATE: JUNE 30, 2006	DWG. 5C-2

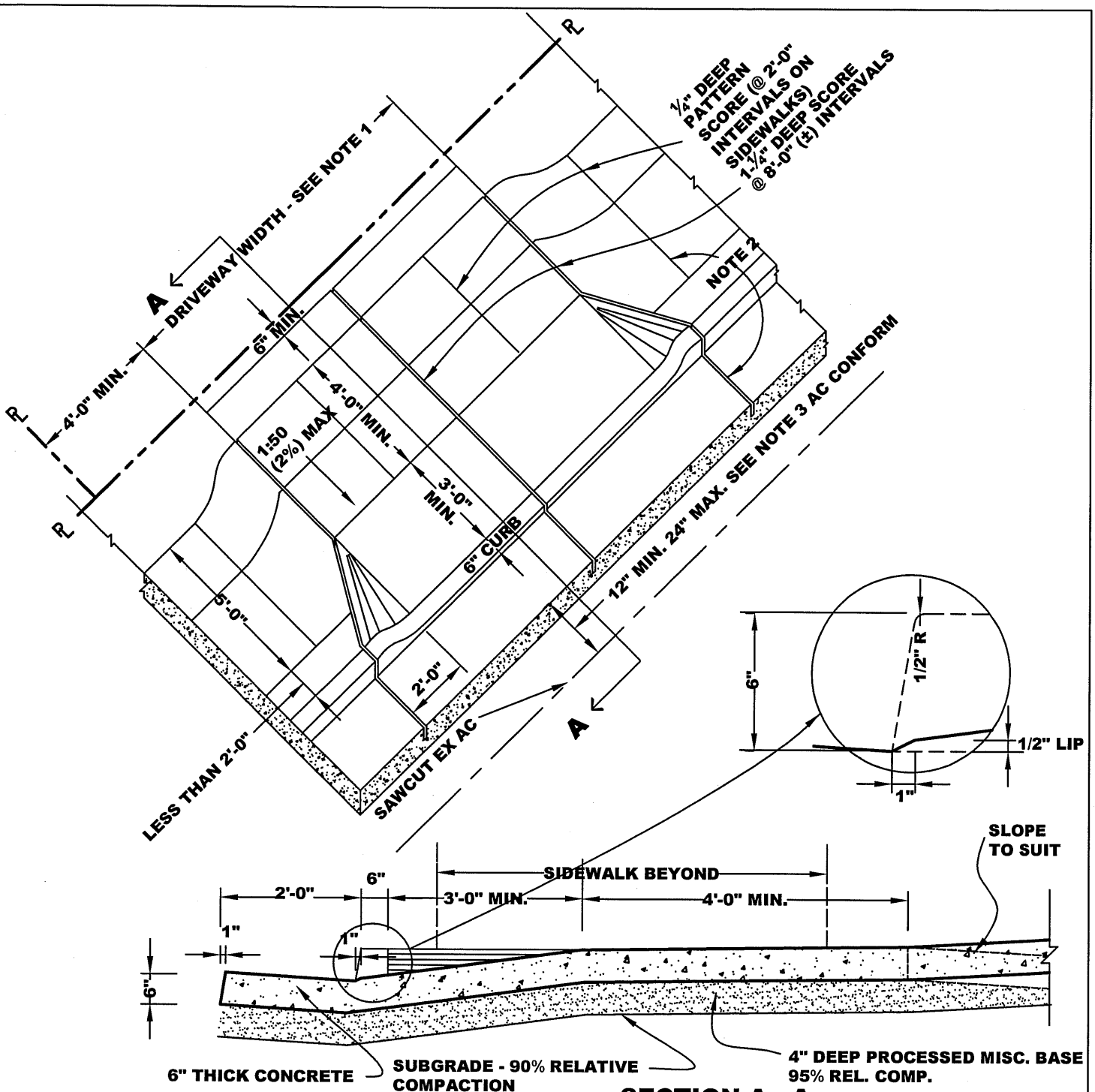

SECTION A - A

NOTES:

1. DRIVEWAY WIDTH. SINGLE 10'-0" MIN,16'-0" MAX. DOUBLE 18'-0" MIN, 24'-0" MAX. WIDTH INCREMENTS SHALL BE IN MULTIPLES OF 2'-0". NOTE THAT FOR REQUIRED FIRE LANES, MINIMUM WIDTHS MAY BE GREATER.
2. IF CONSTRUCTING NEW DRIVEWAY IN EXISTING CURB, GUTTER & SIDEWALK, SAWCUT TO NEAREST SCORED JOINT OR CONTROL JOINT.
3. IF CONSTRUCTING NEW DRIVEWAY IN EXISTING CURB, GUTTER & SIDEWALK, SAWCUT AC & REMOVE. REPLACE WITH NEW AC AFTER CONSTRUCTION OF DRIVEWAY. AC THICKNESS = 6" MIN.; 12" MAX. ON ARTERIALS
4. LIGHT BROOM FINISH ALL SURFACES. USE 1 1PT LAMPBLACK PER CY
5. MATCH EXISTING SCORE PATTERNS OR EXISTING JOINTS IN SIDEWALK. SOME VARIATION IN DIMENSIONING IS PERMITTED, PROVIDED SPECIFIED MAX / MIN SLOPES/DIMENSIONS ARE NOT VIOLATED.

RESIDENTIAL DRIVEWAY APPROACH IN NON MONOLITHIC CURB, GUTTER AND SIDEWALK,WITH PARK-STRIP LESS THAN 2'0" WIDE.	APPROVED BY:	
	DATE: JUNE 30, 2006	DWG. 5C-3

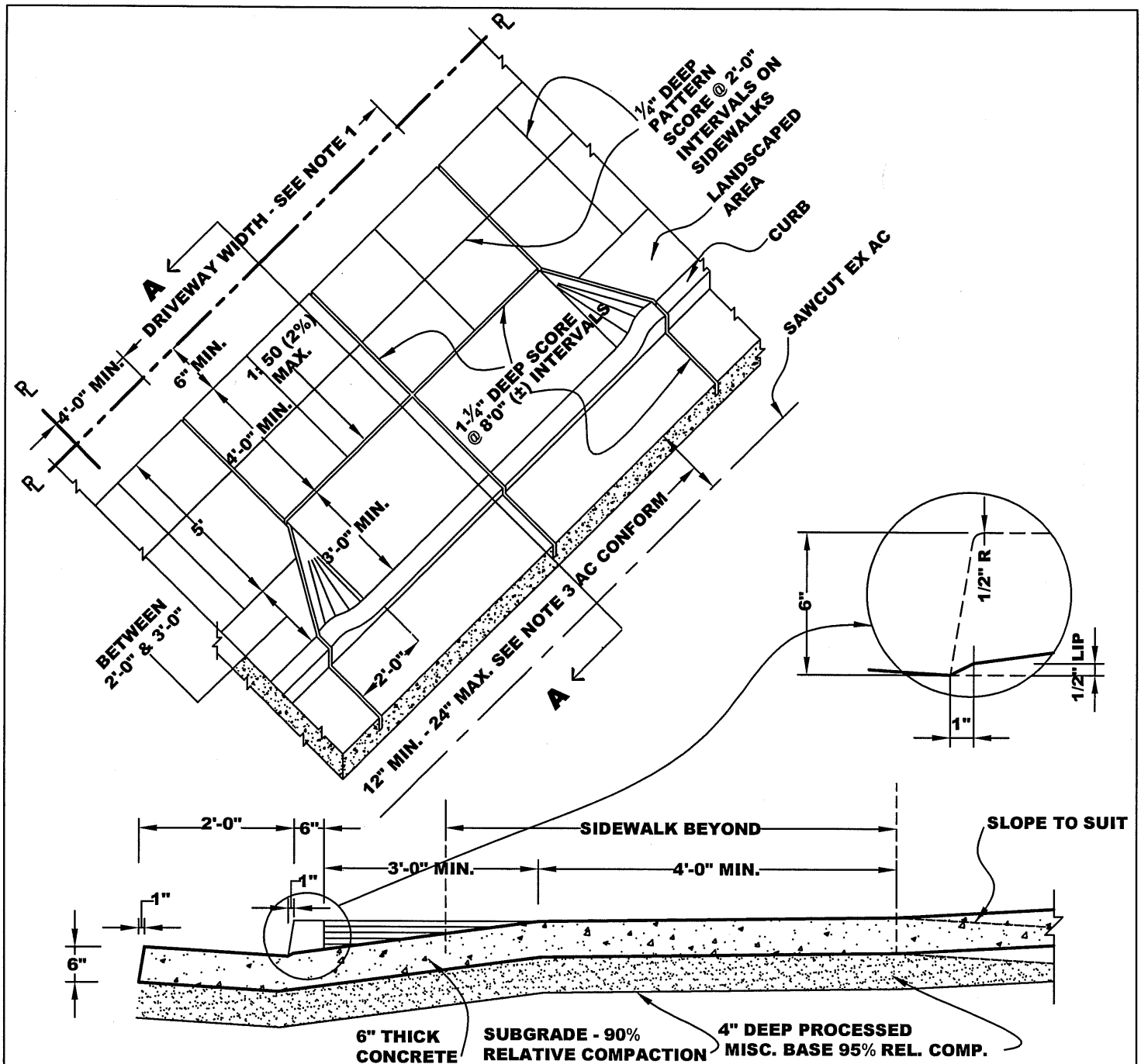

SECTION A - A

NOTES:

1. DRIVEWAY WIDTH. SINGLE 10'-0" MIN,16'-0" MAX. DOUBLE 18'-0" MIN, 24'-0" MAX. WIDTH INCREMENTS SHALL BE IN MULTIPLES OF 2'-0". NOTE THAT FOR REQUIRED FIRE LANES, MINIMUM WIDTHS MAY BE GREATER.
2. IF CONSTRUCTING NEW DRIVEWAY IN EXISTING CURB, GUTTER & SIDEWALK, SAWCUT TO NEAREST SCORED JOINT OR CONTROL JOINT.
3. IF CONSTRUCTING NEW DRIVEWAY IN EXISTING CURB, GUTTER & SIDEWALK, SAWCUT AC & REMOVE. REPLACE WITH NEW AC AFTER CONSTRUCTION OF DRIVEWAY. AC THICKNESS = 6"MIN.; 12"MAX. ON ARTERIALS.
4. LIGHT BROOM FINISH ALL SURFACES. USE 1PT LAMPBLACK PER CY
5. MATCH EXISTING SCORE PATTERNS OR EXISTING JOINTS IN SIDEWALK. SOME VARIATION IN DIMENSIONING IS PERMITTED, PROVIDED SPECIFIED MAX / MIN SLOPES/DIMENSIONS ARE NOT VIOLATED.

RESIDENTIAL DRIVEWAY APPROACH IN NON MONOLITHIC CURB, GUTTER AND SIDEWALK,WITH PARK-STRIP WIDTH GREATER THAN 2'-0" BUT LESS THAN 3'-0".	APPROVED BY:	
	DATE: JUNE 30, 2006	DWG. 5C-4

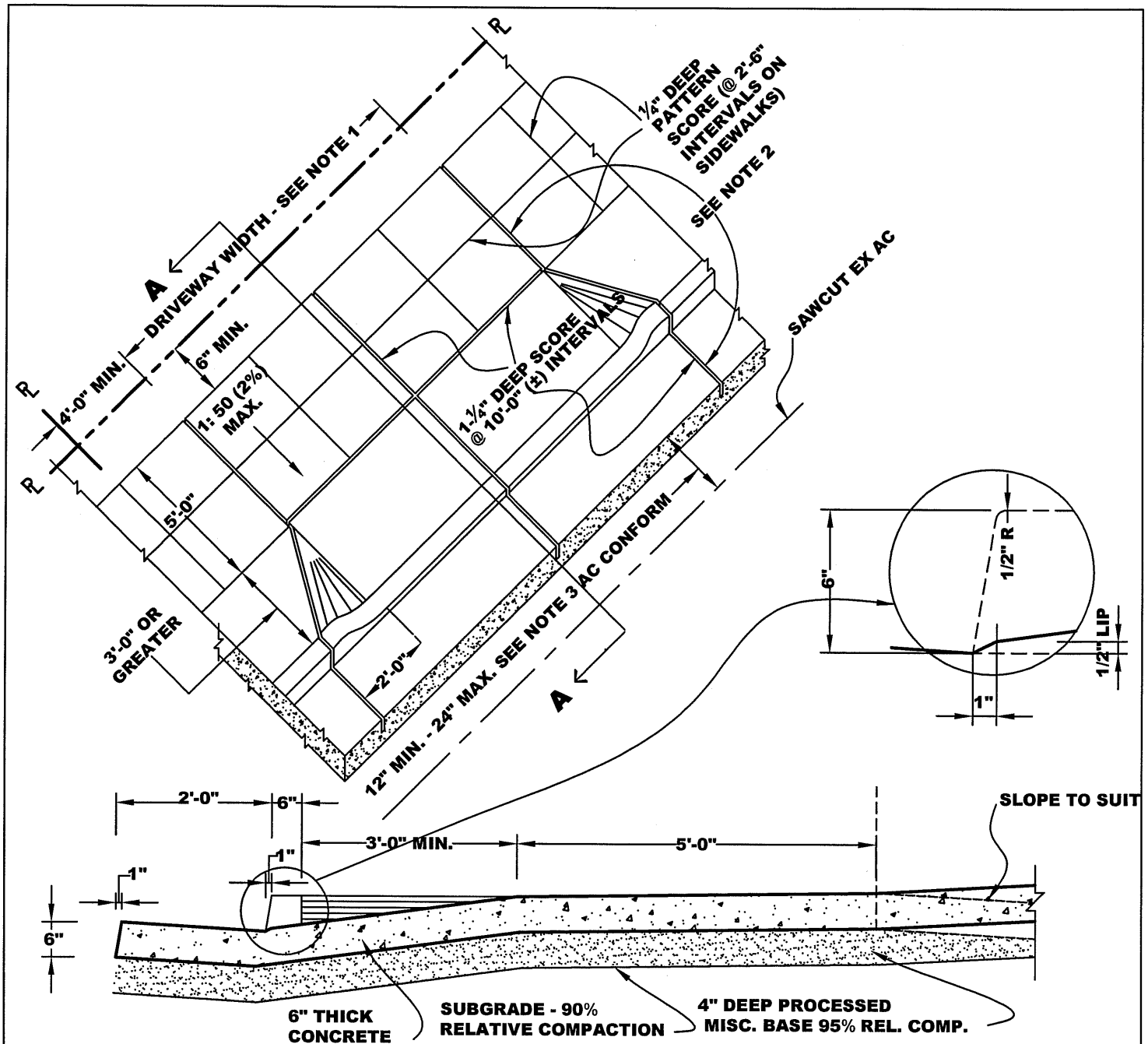

NOTES:

1. DRIVEWAY WIDTH. SINGLE 10'-0" MIN,15'-0" MAX. DOUBLE 17'-6" MIN, 25'-0" MAX. WIDTH INCREMENTS SHALL BE IN MULTIPLES OF 2'-6". NOTE THAT FOR REQUIRED FIRE LANES, MINIMUM WIDTHS MAY BE GREATER.
2. IF CONSTRUCTING NEW DRIVEWAY IN EXISTING CURB, GUTTER & SIDEWALK, SAWCUT TO NEAREST SCORED JOINT OR CONTROL JOINT.
3. IF CONSTRUCTING NEW DRIVEWAY IN EXISTING CURB, GUTTER & SIDEWALK, SAWCUT AC & REMOVE. REPLACE WITH NEW AC AFTER CONSTRUCTION OF DRIVEWAY. AC THICKNESS = 6" MIN.; 12" MAX. ON ARTERIALS.
4. LIGHT BROOM FINISH ALL SURFACES. USE 1PT LAMPBLACK PER CY
5. MATCH EXISTING SCORE PATTERNS OR EXISTING JOINTS IN SIDEWALK. SOME VARIATION IN DIMENSIONING IS PERMITTED, PROVIDED SPECIFIED MAX / MIN SLOPES/DIMENSIONS ARE NOT VIOLATED.

RESIDENTIAL DRIVEWAY APPROACH IN NON MONOLITHIC CURB, GUTTER AND SIDEWALK,WITH PARK-STRIP GREATER THAN 3'-0" WIDE	APPROVED BY:	
	DATE: JUNE 30, 2006	DWG. 5C-5

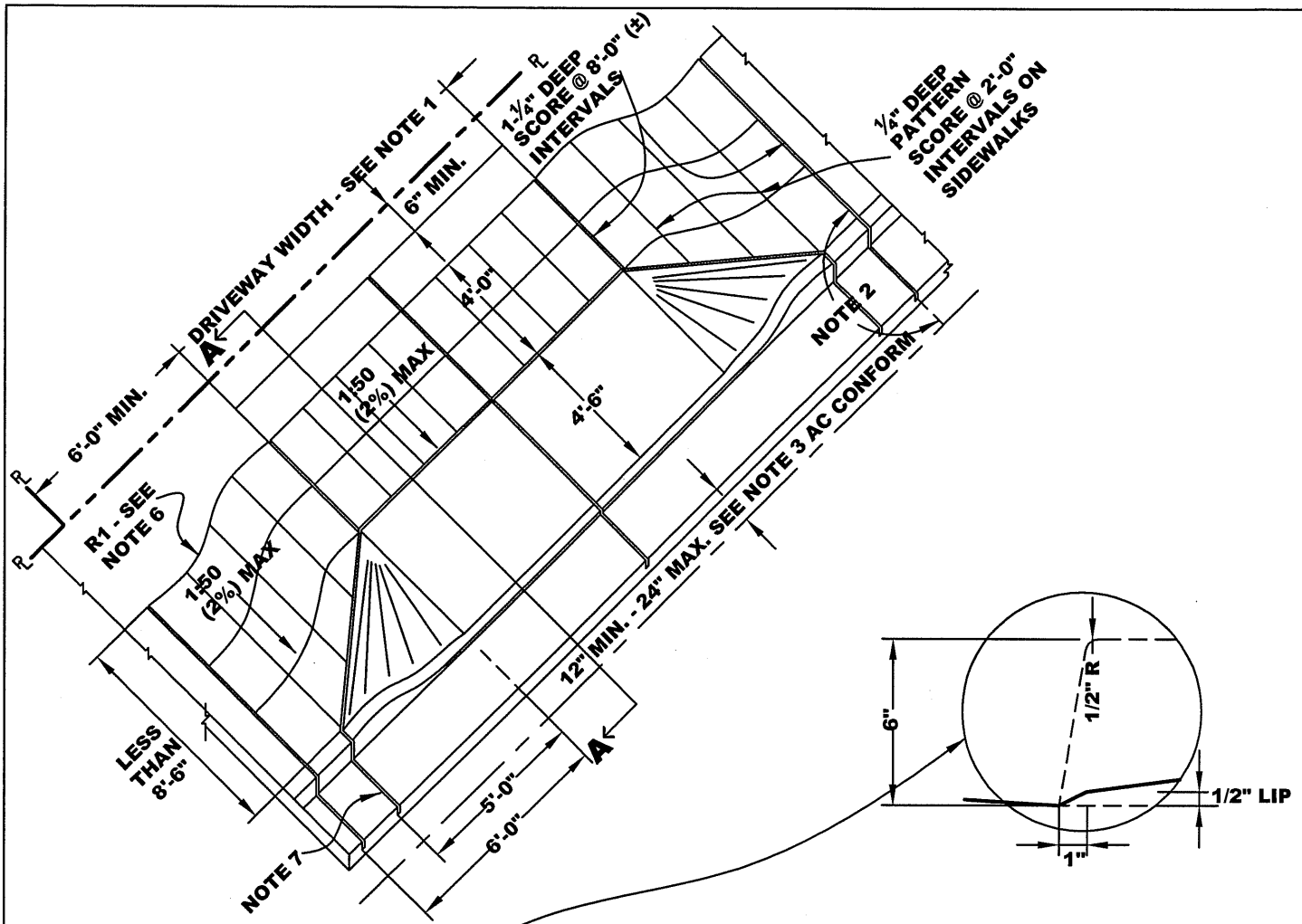

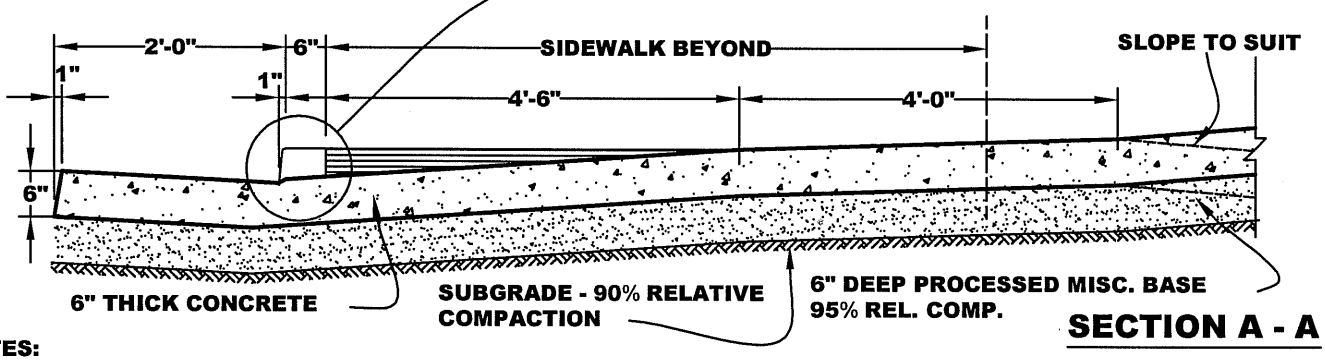

SECTION A - A

NOTES:

1. DRIVEWAY WIDTH. SINGLE 12'-0" MIN,18'-0" MAX. DOUBLE 20'-0" MIN, 42'-0" MAX. WIDTH INCREMENTS SHALL BE IN MULTIPLES OF 2'-0". NOTE THAT FOR REQUIRED FIRE LANES, MINIMUM WIDTHS MAY BE GREATER.
2. IF CONSTRUCTING NEW DRIVEWAY IN EXISTING CURB, GUTTER & SIDEWALK, SAWCUT TO NEAREST SCORED JOINT OR CONTROL JOINT.
3. IF CONSTRUCTING NEW DRIVEWAY IN EXISTING CURB, GUTTER & SIDEWALK, SAWCUT AC & REMOVE. REPLACE WITH NEW AC AFTER CONSTRUCTION OF DRIVEWAY. AC THICKNESS = 6" MIN.; 12" MAX. ON ARTERIALS.
4. LIGHT BROOM FINISH ALL SURFACES. USE 1 PT LAMPBLACK PER CY
5. MATCH EXISTING SCORE PATTERNS OR EXISTING JOINTS IN SIDEWALK. SOME VARIATION IN DIMENSIONING IS PERMITTED, PROVIDED SPECIFIED MAX / MIN SLOPES/DIMENSIONS ARE NOT VIOLATED.
6. R1 IS A FUNCTION OF EXISTING SIDEWALK WIDTH. SELECT TO CREATE SMOOTH TRANSITION.
7. MIN. OF 4'-0" TO EDGE OF FLARE OF ADJACENT DRIVEWAY APPROACH.

COMMERCIAL AND INDUSTRIAL DRIVEWAY APPROACH IN MONOLITHIC CURB, GUTTER AND SIDEWALK, LESS THAN 8'-6" WIDE	APPROVED BY:	
	DATE: JUNE 30, 2006	DWG. 6C-1

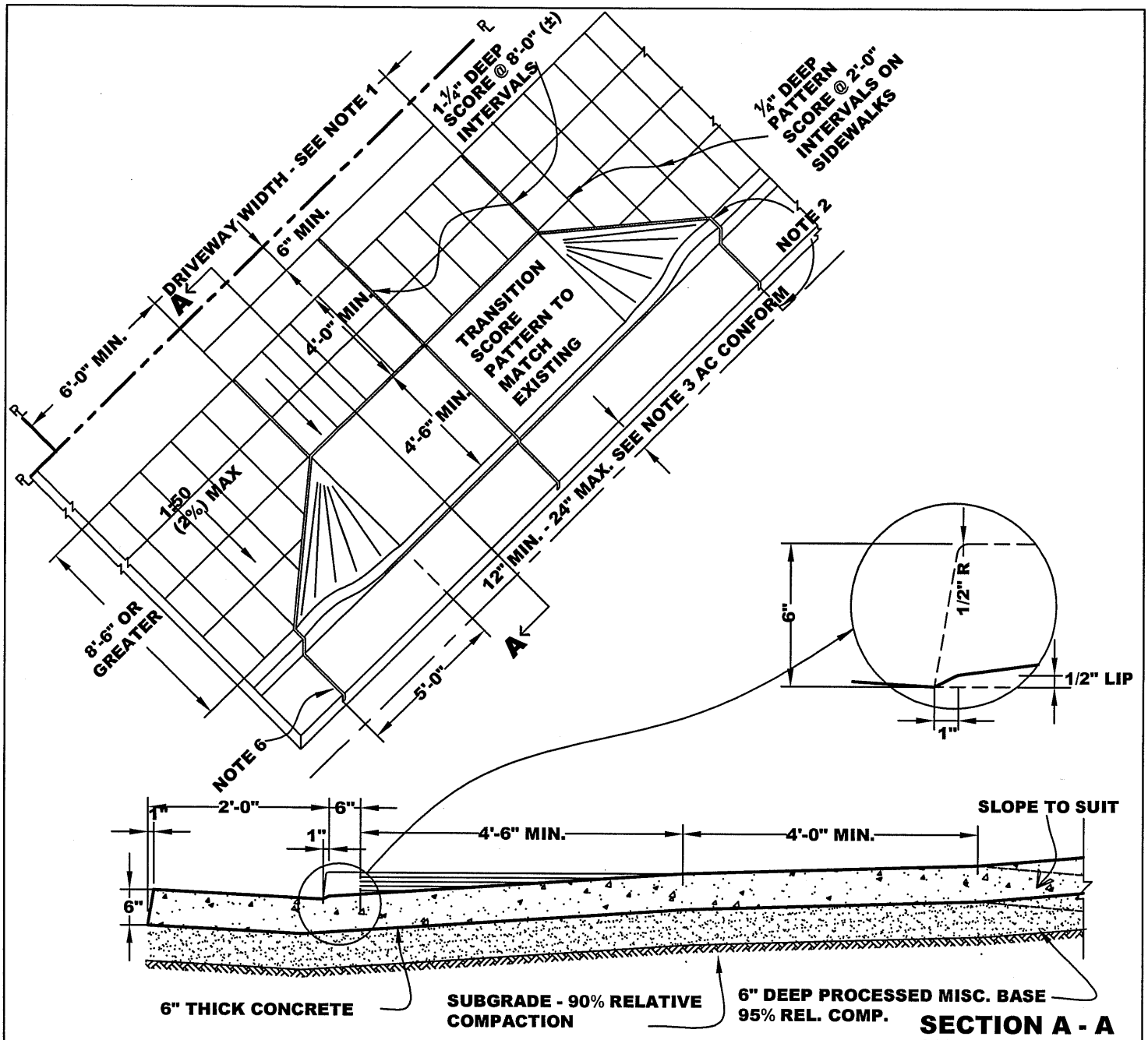

SECTION A - A

NOTES:

1. DRIVEWAY WIDTH. SINGLE 12'-0" MIN,18'-0" MAX. DOUBLE 20'-0" MIN, 42'-0" MAX. WIDTH INCREMENTS SHALL BE IN MULTIPLES OF 2'-0". NOTE THAT FOR REQUIRED FIRE LANES, MINIMUM WIDTHS MAY BE GREATER.
2. IF CONSTRUCTING NEW DRIVEWAY IN EXISTING CURB, GUTTER & SIDEWALK, SAWCUT TO NEAREST SCORED JOINT OR CONTROL JOINT.
3. IF CONSTRUCTING NEW DRIVEWAY IN EXISTING CURB, GUTTER & SIDEWALK,SAWCUT AC & REMOVE. REPLACE WITH NEW AC AFTER CONSTRUCTION OF DRIVEWAY. AC THICKNESS = 6" MIN.; 12" MAX. ON ARTERIALS
4. LIGHT BROOM FINISH ALL SURFACES. USE 1 PT LAMPBLACK PER CY
5. MATCH EXISTING SCORE PATTERNS OR EXISTING JOINTS IN SIDEWALK. SOME VARIATION IN DIMENSIONING IS PERMITTED, PROVIDED SPECIFIED MAX / MIN SLOPES/DIMENSIONS ARE NOT VIOLATED.
6. MIN. OF 4'-0" TO EDGE OF FLARE OF ADJACENT DRIVEWAY APPROACH.

COMMERCIAL AND INDUSTRIAL DRIVEWAY APPROACH IN MONOLITHIC CURB, GUTTER AND SIDEWALK, GREATER THAN 8'-6" WIDE.	APPROVED BY:	
	DATE: JUNE 30, 2006	DWG. 6C-2

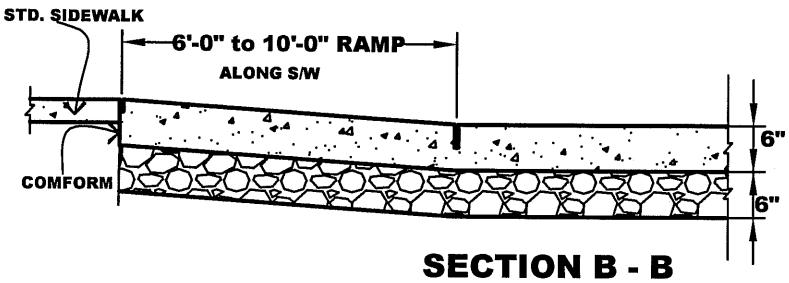

SECTION B - B

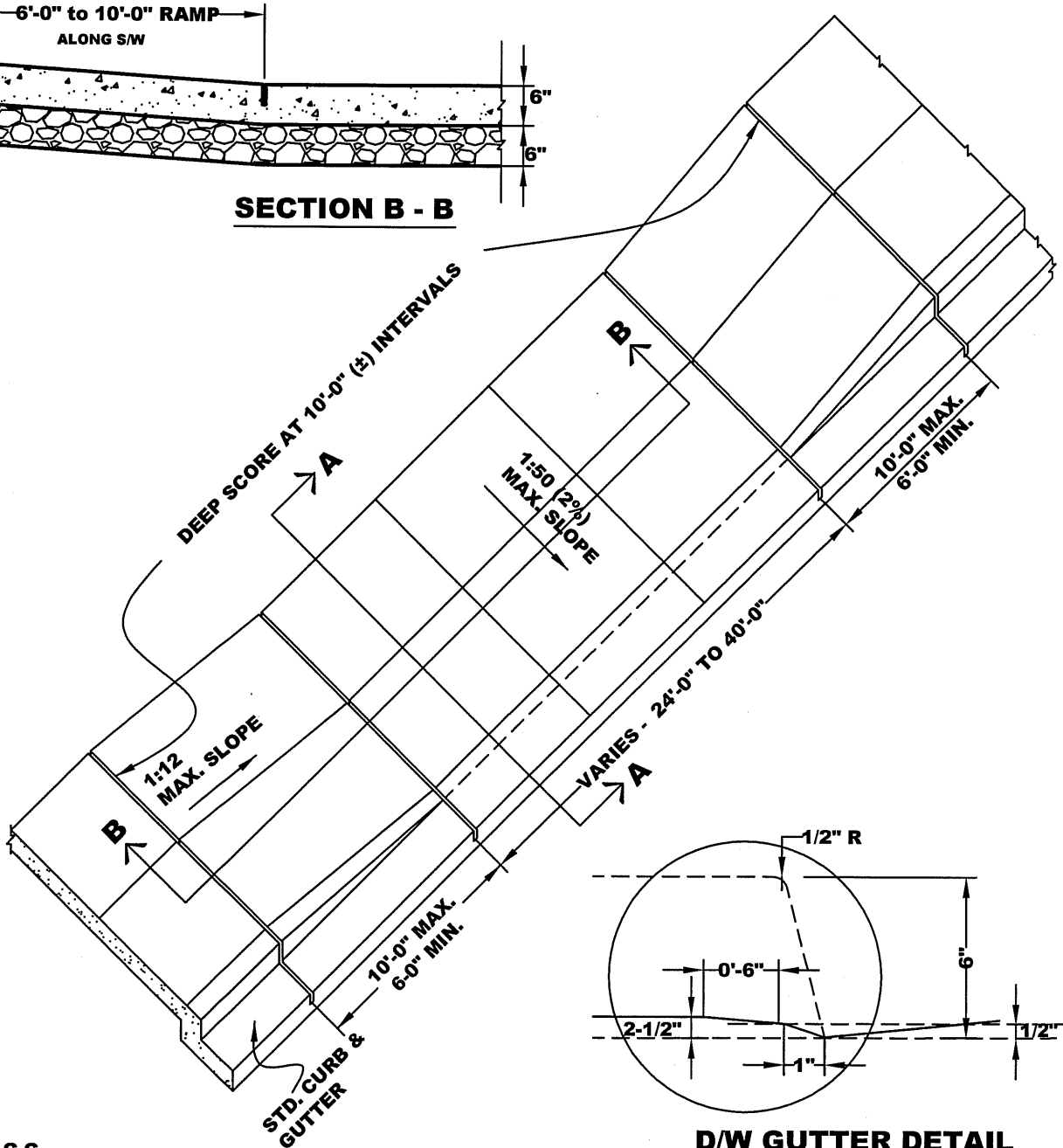

D/W GUTTER DETAIL

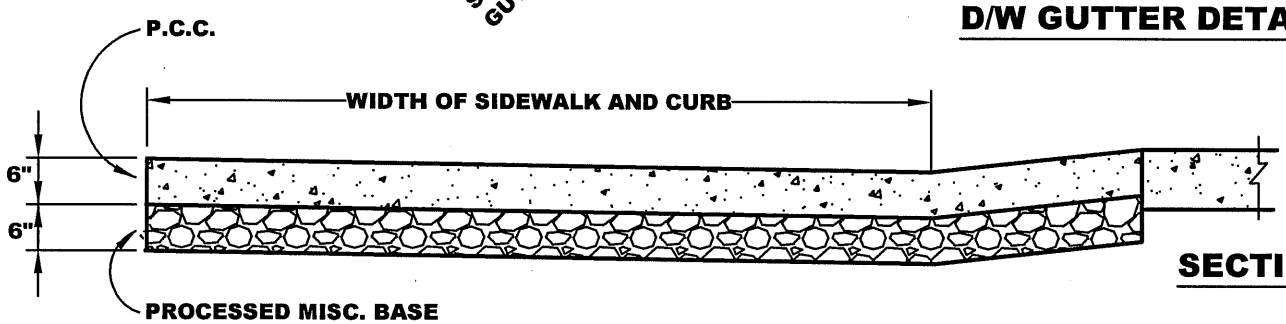

SECTION A -A

COMMERCIAL AND INDUSTRIAL DRIVEWAY -SIDEWALK RAMP TYPE	APPROVED BY:	
	DATE: JUNE 30, 2006	DWG. 6C-3

2006 STANDARD DETAILS

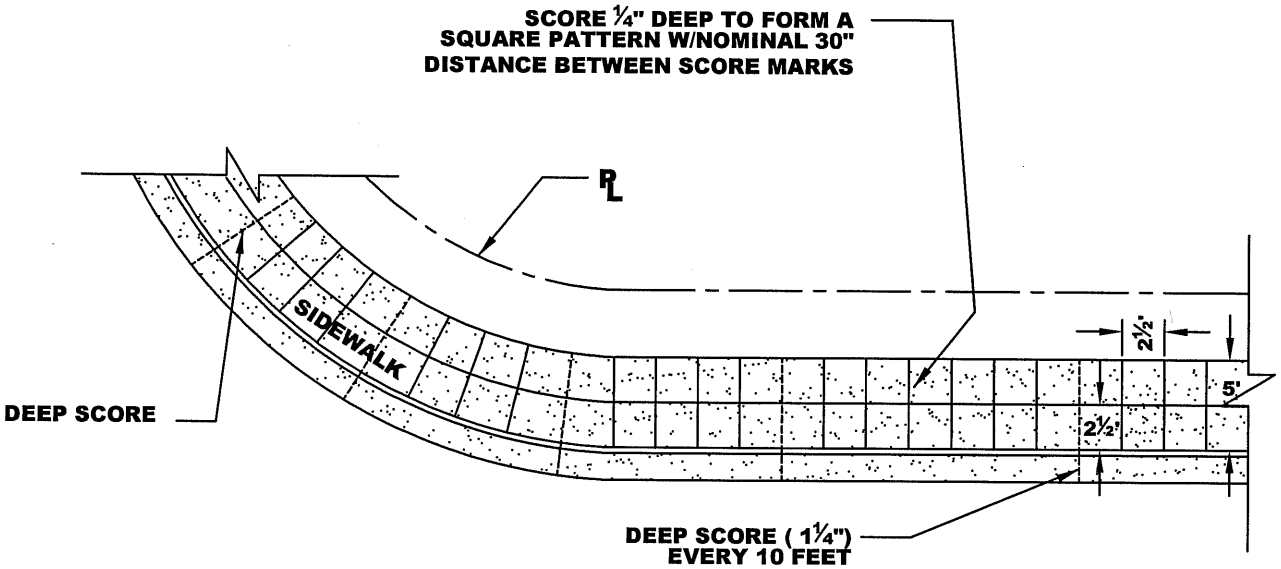

PLAN VIEW
NO SCALE

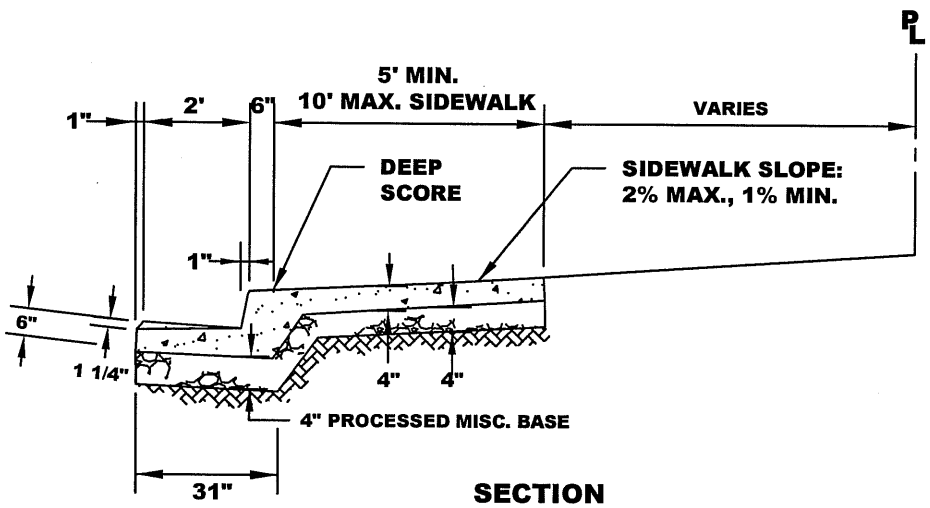

SECTION

NOTE: SEE STANDARD DETAILS 13F & 14F FOR INSTALLATION OF ROOT BARRIER, IF CITY DETERNINES ROOT BARRIER IS NECESSARY.

WHEN REPLACING EXISTING CURB W/ NEW, REPLACE PRE-EXISTING CURB MARKS & PAINT (ESPECIALY THOSE MARKS IDENTIFYING SEWER OR VALVE FEATURES).
USE 1 PINT LAMPBLACK PER CUBIC YARD OF CONCRETE

MONOLITHIC CURB, GUTTER & SIDEWALK SECTION	APPROVED BY:	
	DATE : JUNE 30, 2006	DWG. 9C

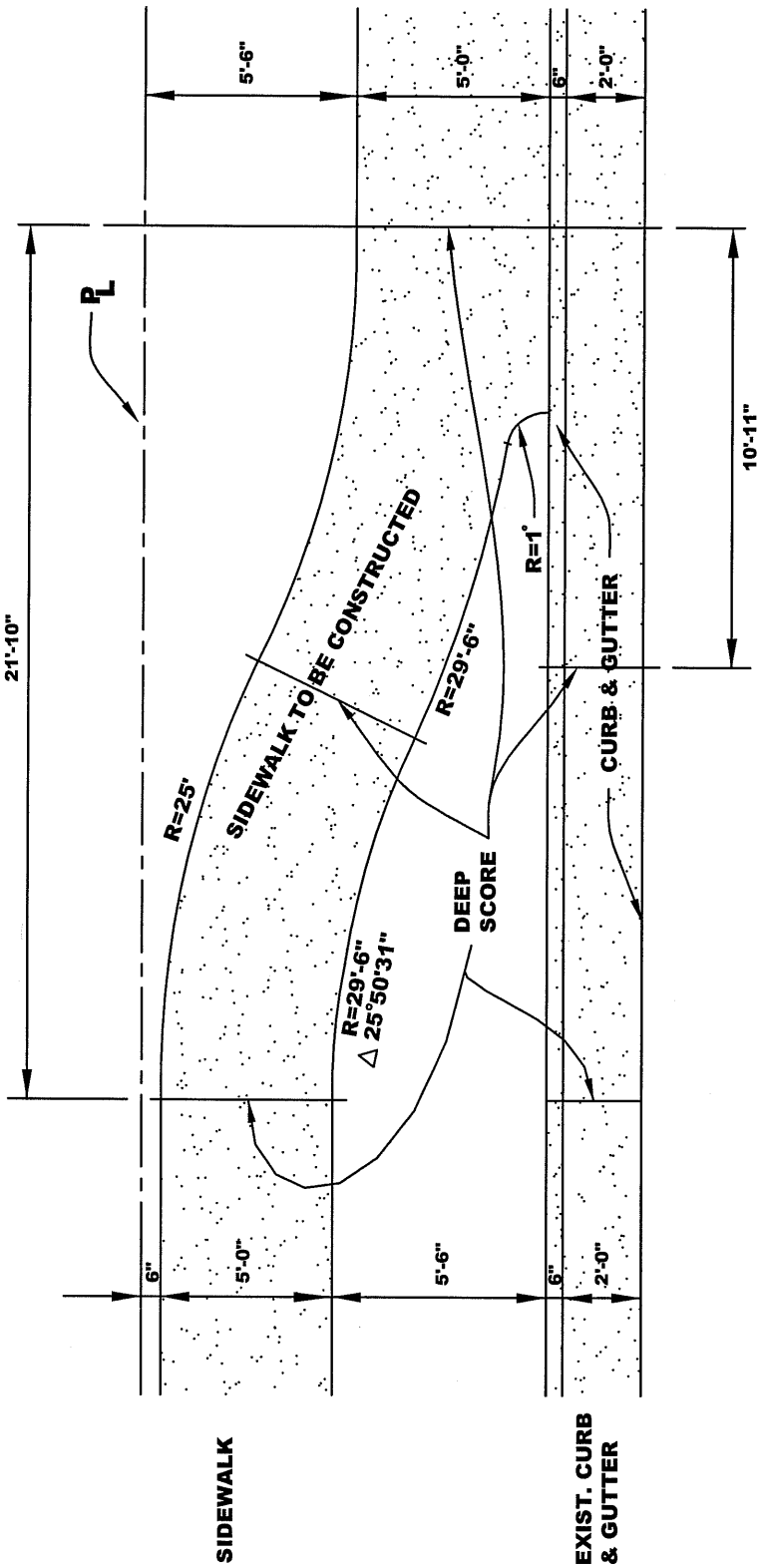

NOTE: SEE STANDARD DETAILS 13F & 14F FOR INSTALLATION OF ROOT BARRIER, IF CITY DETERMINES ROOT BARRIER IS NECESSARY

SIDEWALK TRANSITION DETAIL	APPROVED BY:	
	DATE : JUNE 30, 2006	DWG. 10C

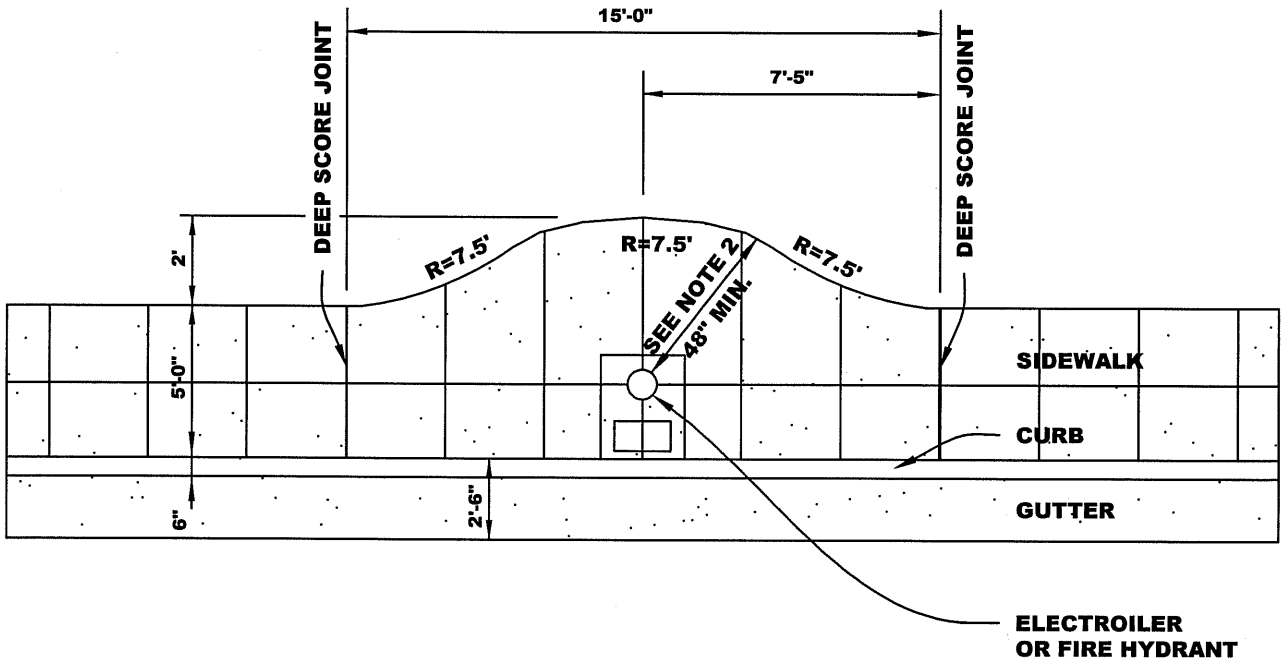

NOTE:

1. SEE STANDARD DETAILS 13F & 14F FOR INSTALLATION OF ROOT BARRIER, IF CITY DETERMINES ROOT BARRIER IS NECESSARY.
2. DIMENSION RELATING TO BACK OF SIDEWALK MAY NEED TO BE ADJUSTED & ENSURE A MINIMUN 4'-0" CLEARANCE.

SIDEWALK TRANSITION AROUND EXISTING ELECTROILERS OR FIRE HYDRANT	APPROVED BY:	
	DATE : JUNE 30, 2006	DWG. 11C

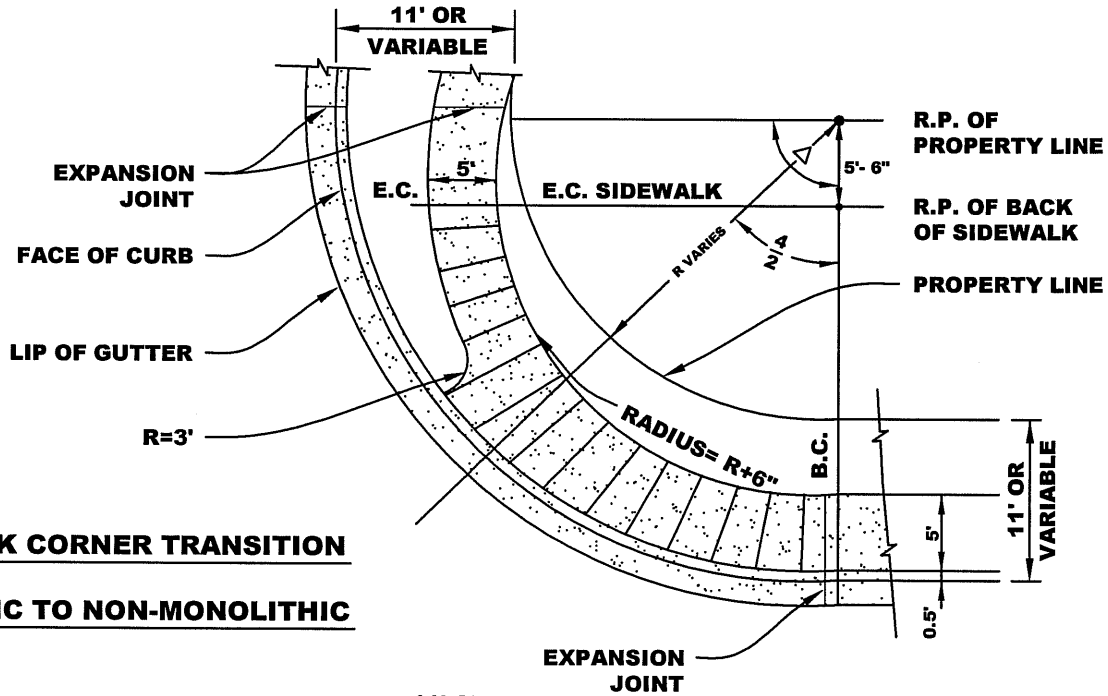

SIDEWALK CORNER TRANSITION

MONOLITIC TO NON-MONOLITHIC

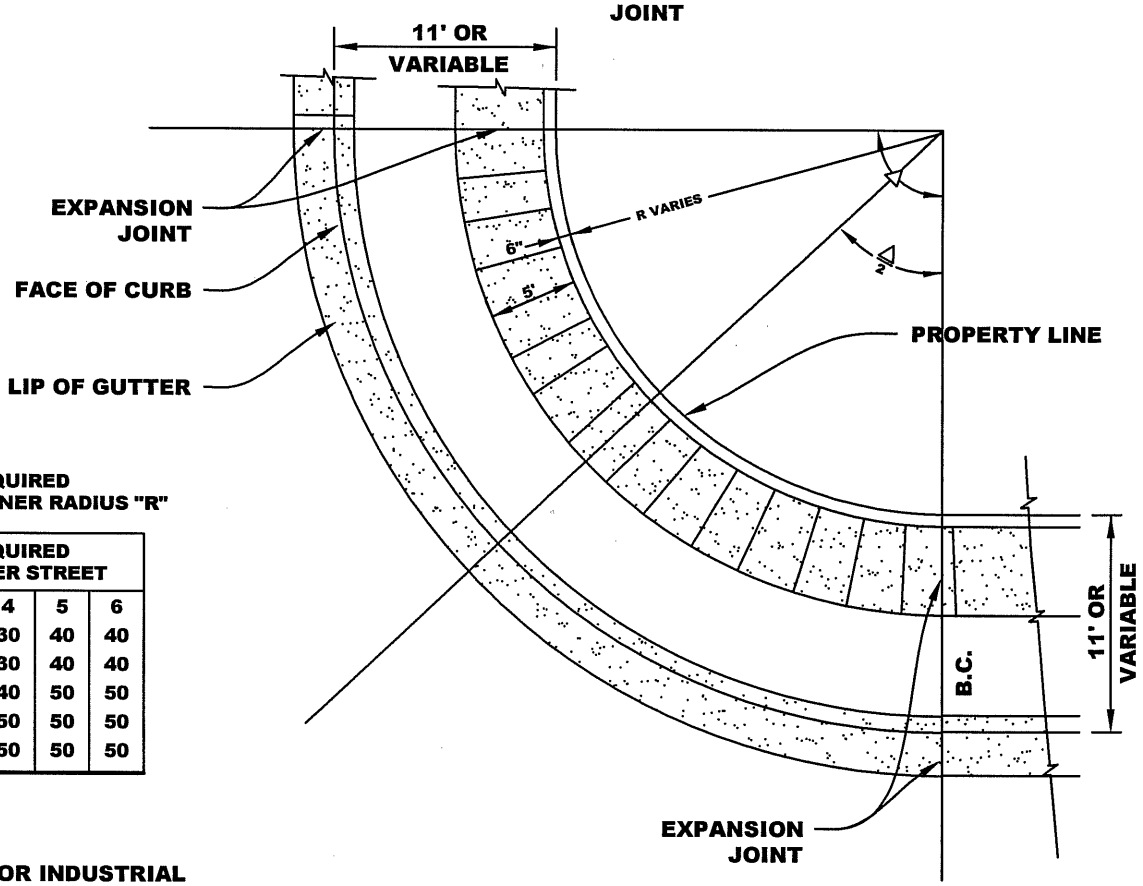

CHART FOR REQUIRED PROPERTY CORNER RADIUS "R"

NUMBER OF PROPOSED LANES ON OTHER STREET	CHART FOR REQUIRED LANES ON OTHER STREET				
	2	3	4	5	6
2	20	20	30	40	40
3	20	20	30	40	40
4	30	30	40	50	50
5	40	40	50	50	50
6	40	40	50	50	50

NOTE:

1. 30' MIN. RADIUS FOR INDUSTRIAL
2. THIS DRAWING DOES NOT ADDRESS CURB RAMP REQUIREMENTS AT STREET INTERSECTIONS.
3. SEE STANDARD DETAILS 13F & 14F FOR INSTALLATION OF ROOT BARRIER, IF CITY DETERMINES ROOT BARRIER IS NECESSARY.

SIDEWALK INTERSECTION

APPROVED BY:

DATE : JUNE 30, 2006

DWG. 12C

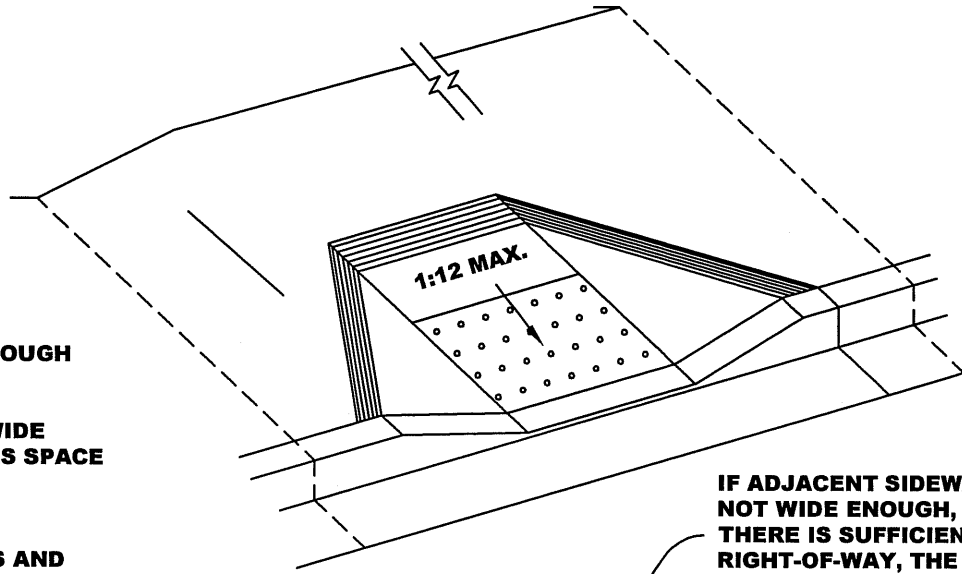

NOTES:

1. THE SUFACE SHALL BE ROUGH BROOM FINISH.
2. THERE SHALL BE A 12" WIDE BORDER OF 1/4" GROOVES SPACE AT APPROX. 3/4" O.C. (SEE GROOVE DETAIL).
3. IF THE MAXIMUM SLOPES AND MINIMUM DIMENSION CANNOT BE ACHIEVED, THE SIDEWALK SHALL BE DEPRESSED AS DETAILED IN STD. DWG. 13C-3.
4. IF CONSTRUCTING NEW CURB RAMP IN EXISTING CURB, GUTTER, AND SIDEWALK, SAWCUT AC AND REMOVE. REPLACE WITH NEW AC AFTER CONSTRUCTION OF CURB RAMP. AC THICKNESS = 6" MIN.; 12" MAX. ON ARTERIALS
5. 1 PT LAMP BACK / CY.

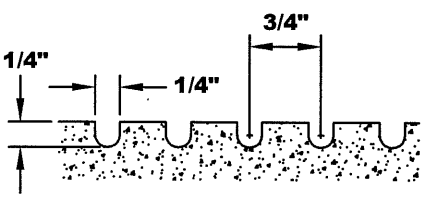

GROOVING DETAIL

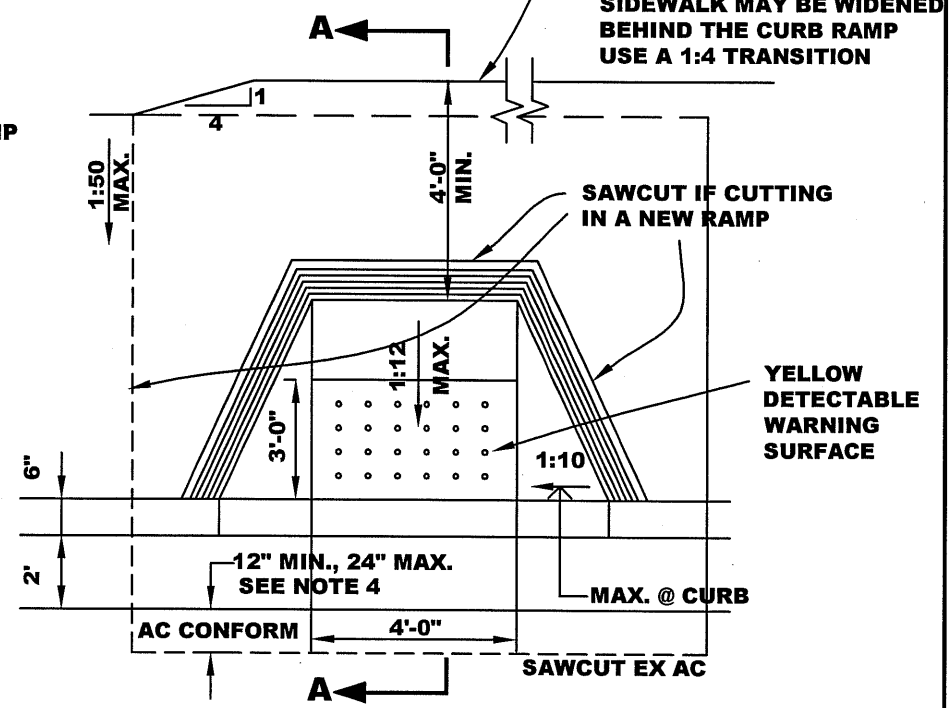

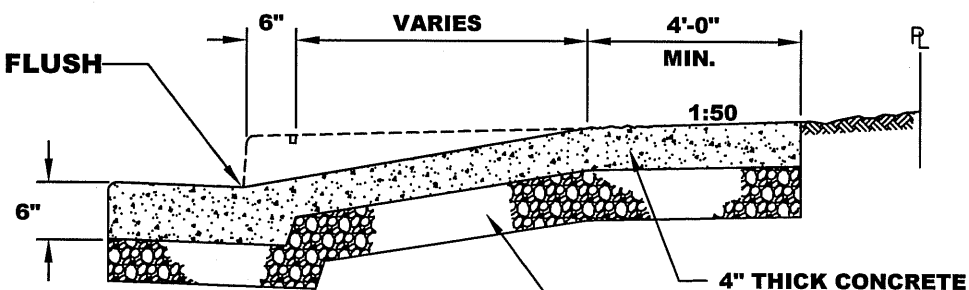

SECTION A - A

PERPENDICULAR CURB RAMP EXTRA WIDE SIDEWALK	APPROVED BY:	
	DATE : JUNE 30, 2006	DWG. 13C-1

2006 STANDARD DETAILS

NOTES:

1. THE SURFACE SHALL BE ROUGH BROOM FINISH.
2. THERE SHALL BE A 12" WIDE BORDER OF 1/4" GROOVES SPACED AT APROX. 3/4" O.C. AS SHOWN.
3. FOR GROOVE DETAILS SEE 13C-1.
4. 1PT LAMP BACK PER CY
5. IF CONSTRUCTING NEW CURB RAMP IN EXISTING CURB, GUTTER AND SIDEWALK, SAWCUT AC AND REMOVE. REPLACE WITH NEW AC AFTER CONSTRUCTION OF CURB RAMP. AC THICKNESS 6" MIN.; 12" MAX. ON ARTERIALS.

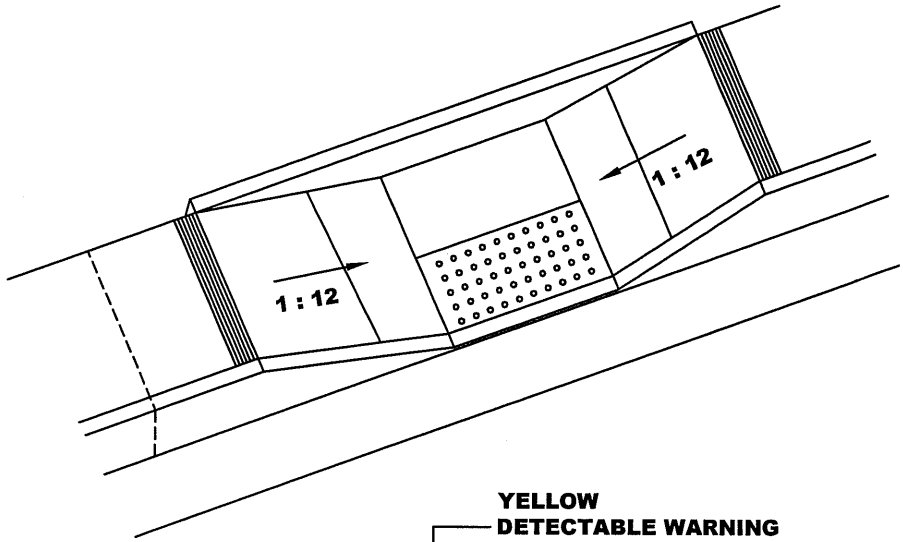

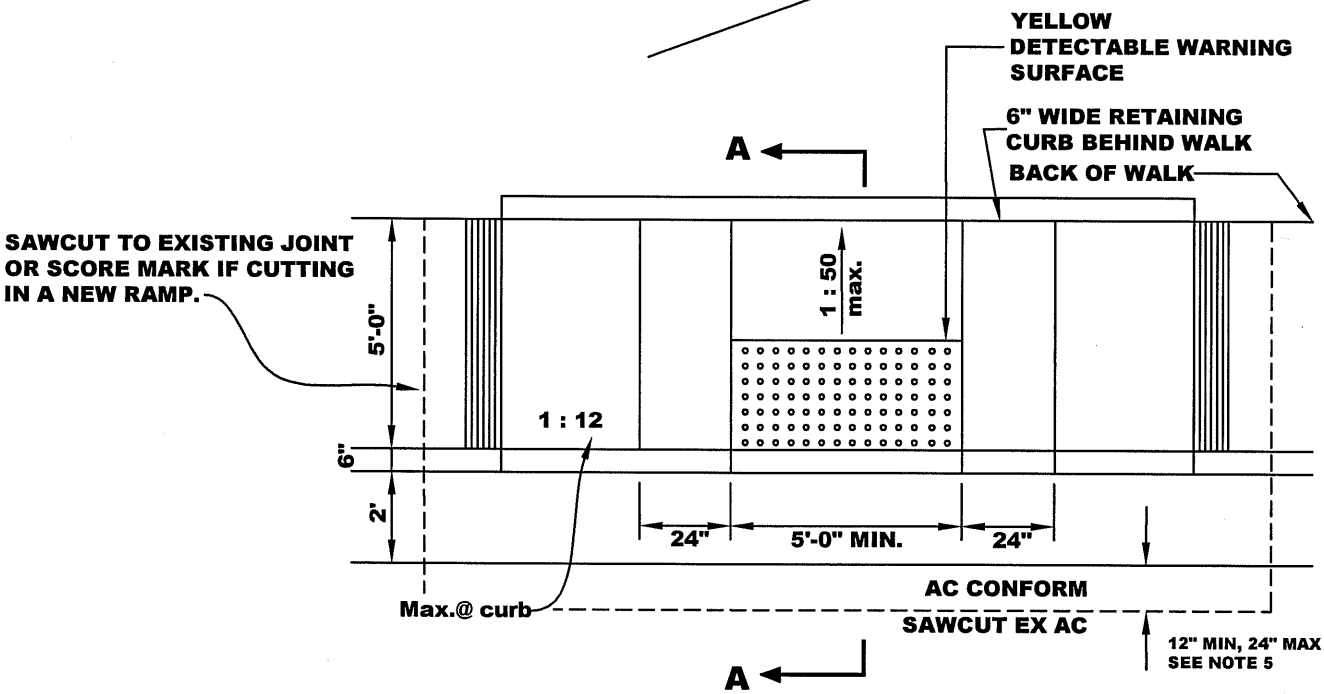

PLAN VIEW

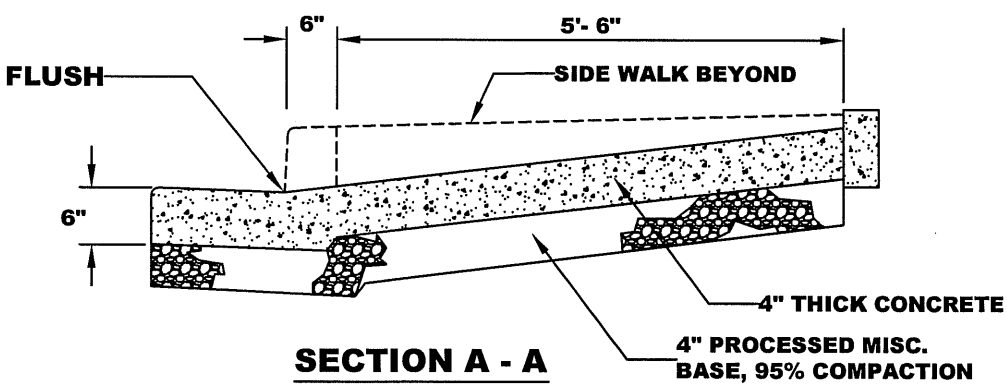

SECTION A - A

PARALLEL CURB RAMP MONOLITHIC SIDEWALK	APPROVED BY:	
	DATE : JUNE 30, 2006	DWG. 13C-2

2006 STANDARD DETAILS

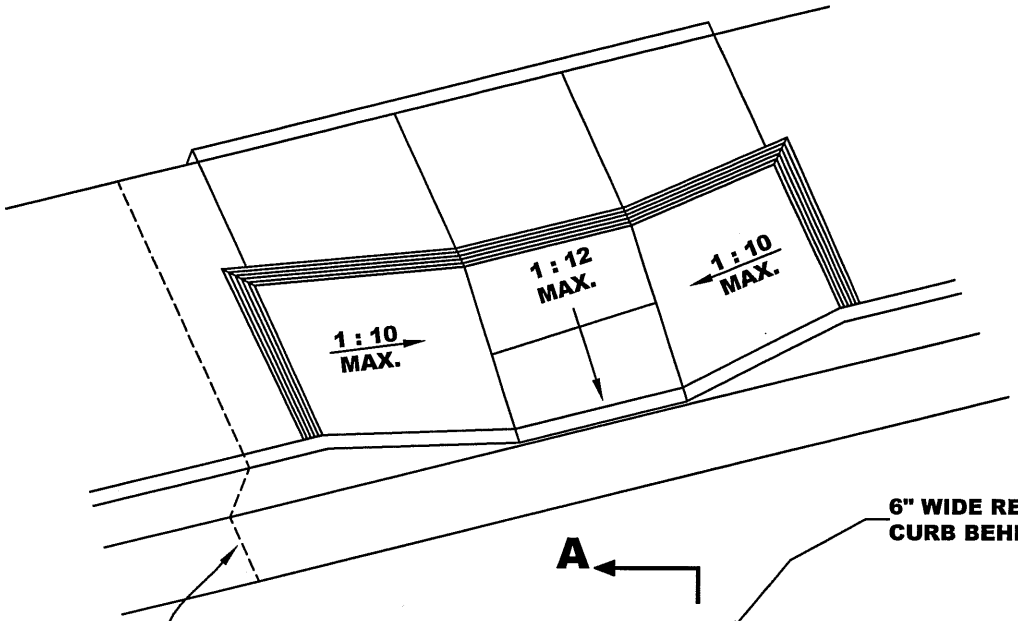

NOTES:

1. THE SURFACE SHALL BE ROUGH BROOM FINISH.
2. FOR GROOVE DETAILS, SEE STD DRAWING 13C-1.
3. IF CONSTRUCTING NEW CURB RAMP IN EXISTING CURB, GUTTER AND SIDEWALK, SAWCUT AC AND REMOVE. REPLACE WITH NEW AC AFTER CONSTRUCTION OF CURB RAMP. AC THICKNESS = 6" MIN.; 12" MAX. ON ARTERIALS.
4. 1 PT LAMP BLACK / CY

SAWCUT TO EXISTING JOINT OR SCORE MARK IF CUTTING IN A NEW RAMP.

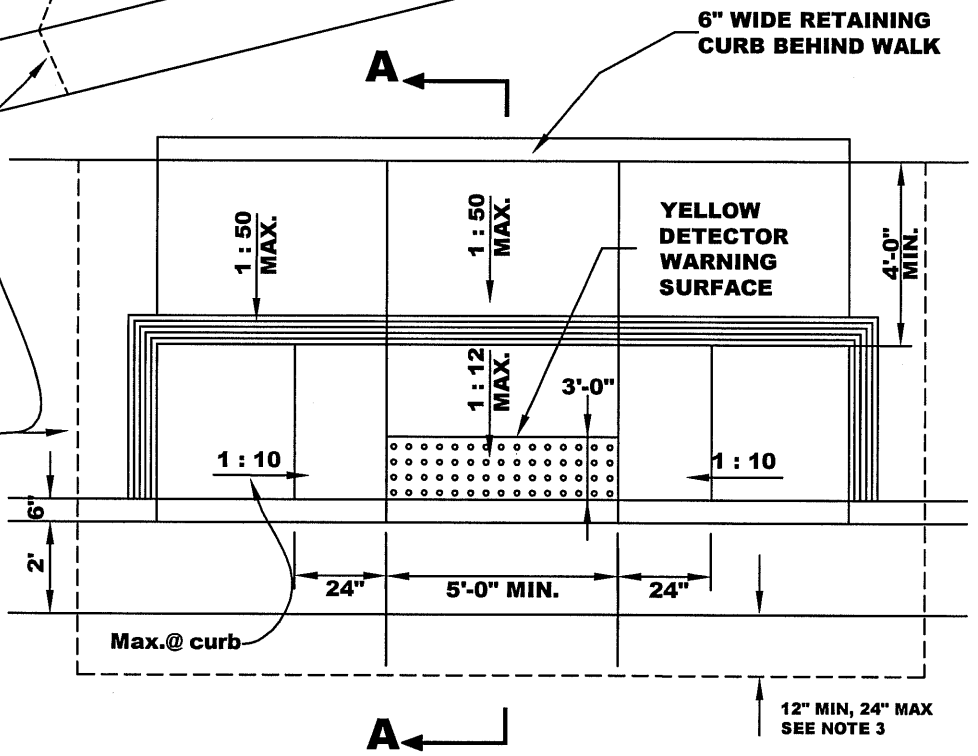

PLAN VIEW

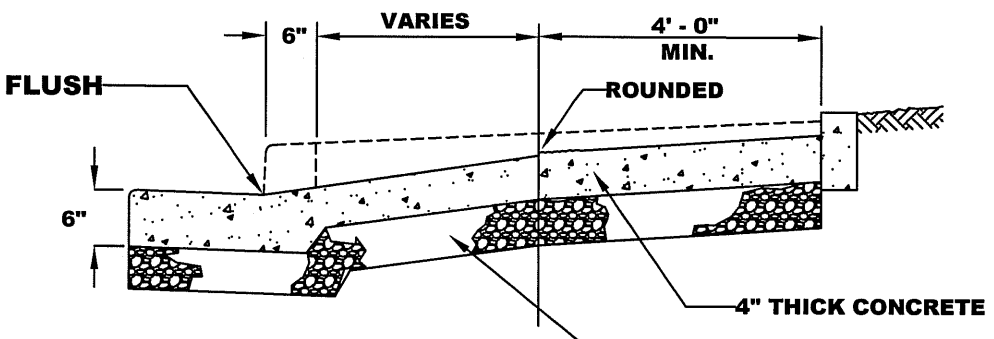

SECTION A - A

COMBINED PARALLEL/PERPENDICULAR CURB RAMP, EXTRA WIDE SIDEWALK	APPROVED BY:	
	DATE : JUNE 30, 2006	DWG. 13C-3

2006 STANDARD DETAILS

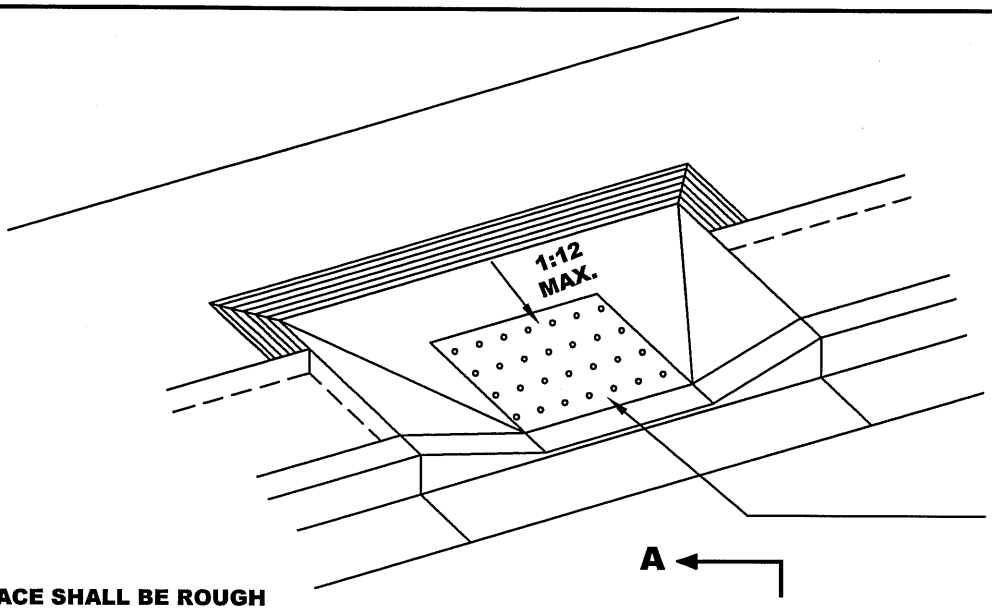

NOTES:

1. THE SUFACE SHALL BE ROUGH BROOM FINISH
2. FOR GROOVE DETAILS, SEE STD DRAWING 13C-1.
3. IF CONSTRUCTING NEW CURB RAMP IN EXISTING CURB, GUTTER AND SIDEWALK, SAWCUT AC AND REMOVE. REPLACE WITH NEW AC AFTER CONSTRUCTION OF CURB RAMP. AC THICKNESS 6" MIN.; 12" MAX. ON ARTERIALS.
4. 1 PT LAMP BACK / CY

NOTE

IF THE MAX. SLOPES AND MIN. DIMENSIONS CANNOT BE ACHIEVED, THE SIDEWALK SHALL BE DEPRESSED AS DETAILED IN STD DWG 13C-5

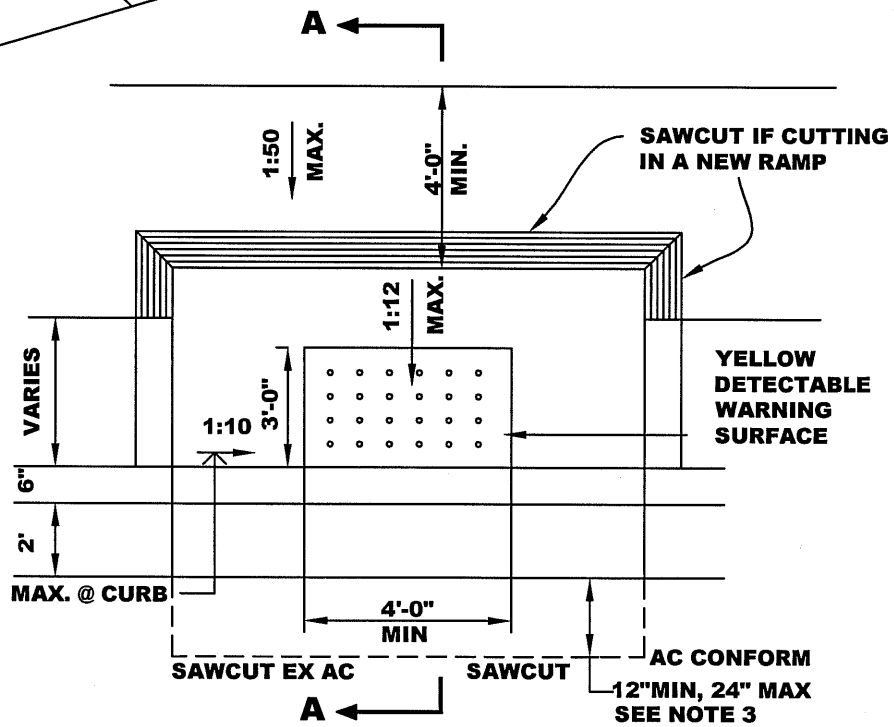

PLAN VIEW

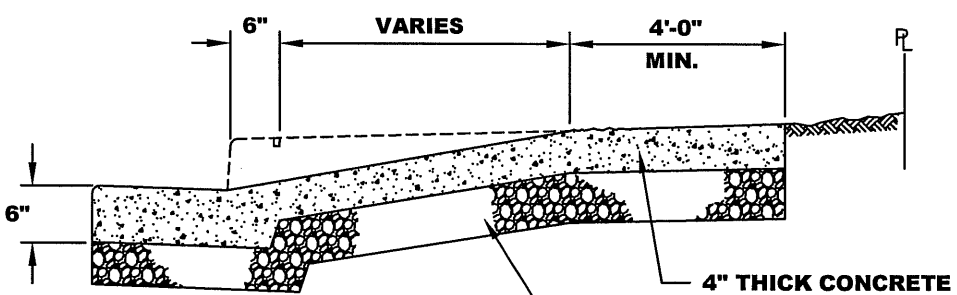

SECTION A - A

PERPENDICULAR CURB RAMP SEPARATED SIDEWALK	APPROVED BY:	
	DATE : JUNE 30, 2006	DWG. 13C-4

2006 STANDARD DETAILS

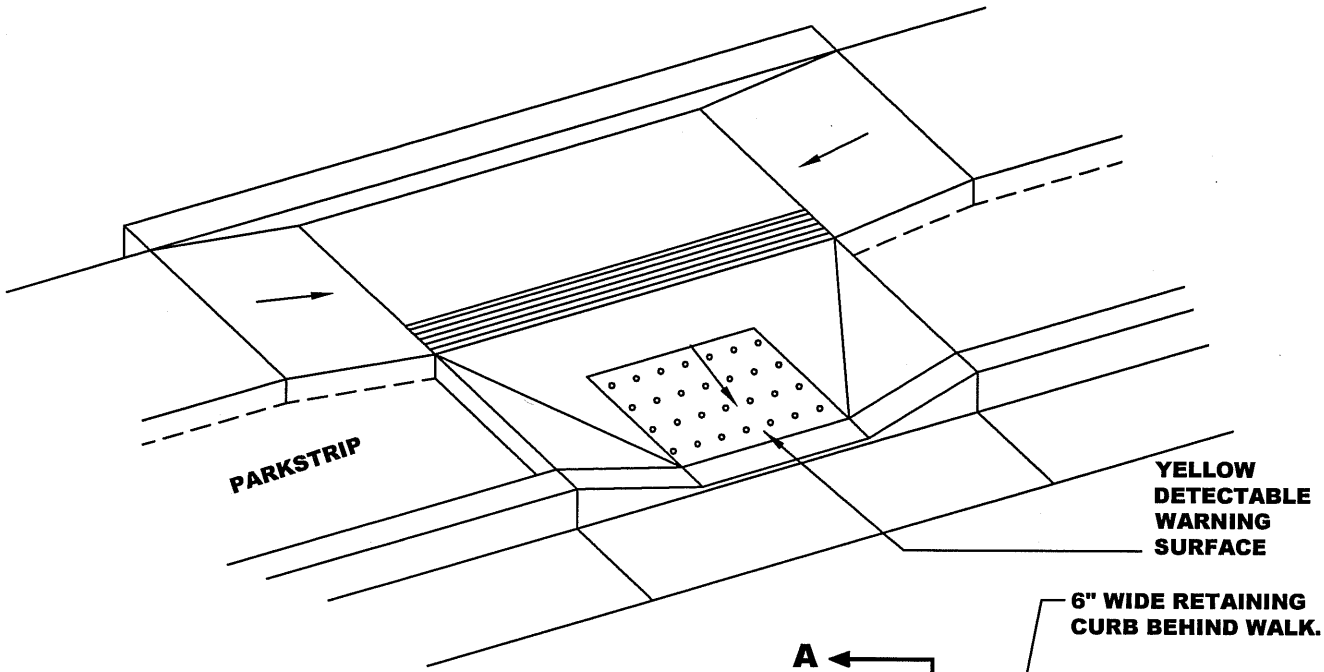

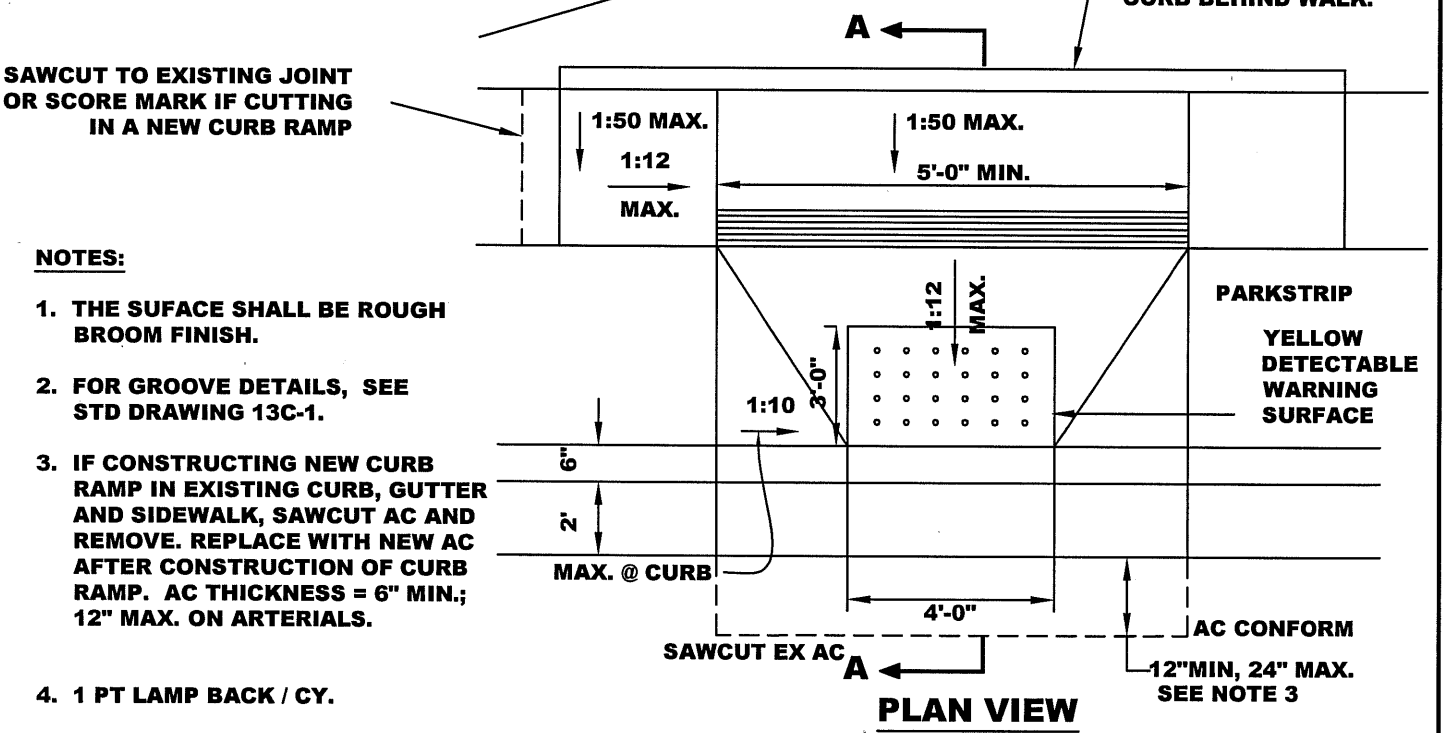

PLAN VIEW

NOTES:

1. THE SUFACE SHALL BE ROUGH BROOM FINISH.
2. FOR GROOVE DETAILS, SEE STD DRAWING 13C-1.
3. IF CONSTRUCTING NEW CURB RAMP IN EXISTING CURB, GUTTER AND SIDEWALK, SAWCUT AC AND REMOVE. REPLACE WITH NEW AC AFTER CONSTRUCTION OF CURB RAMP. AC THICKNESS = 6" MIN.; 12" MAX. ON ARTERIALS.
4. 1 PT LAMP BACK / CY.

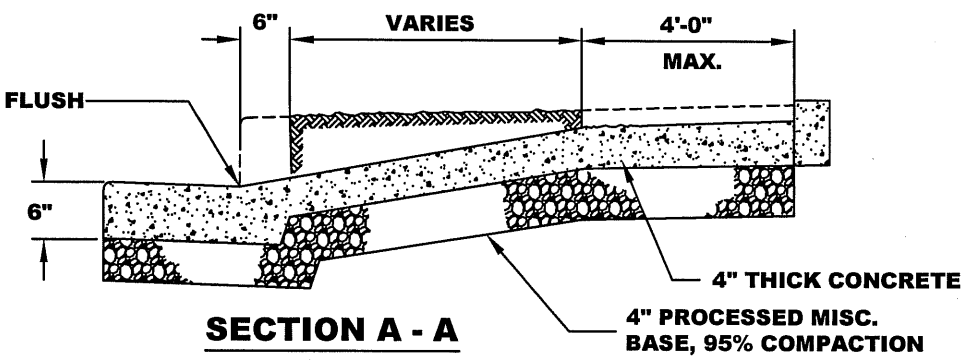

SECTION A - A

COMBINED PARALLEL / PERPENDICULAR CURB RAMPS SEPARATED SIDEWALK	APPROVED BY:	
	DATE : JUNE 30, 2006	DWG. 13C-5

2006 STANDARD DETAILS

A 3" HIGH LETTER "S" OR "W" IS TO BE PLACED ON TOP OF CURB AT PROPER LOCATIONS OVER LATERALS.

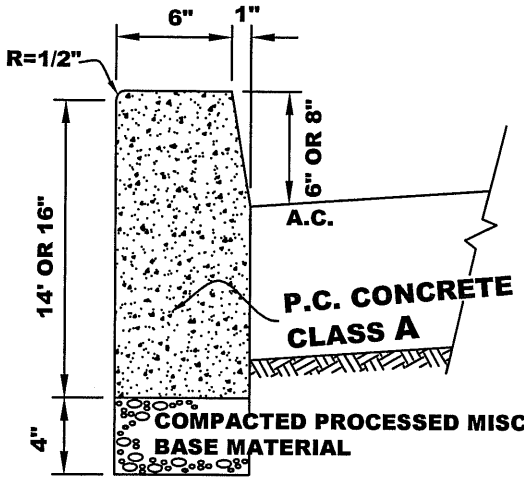

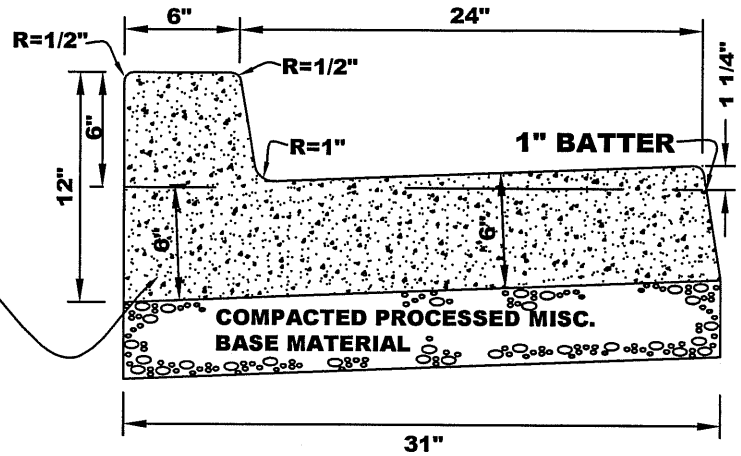

NOTE: PROVIDE 1 PINT LAMPBLACK / CUBIC YARD IN PCC

TYPE I-6 AND I-8 CURB **TYPE II CURB**

APPLY ON APPROVED PRESSURE SENSITIVE ADHESIVE TO BOTH SURFACES

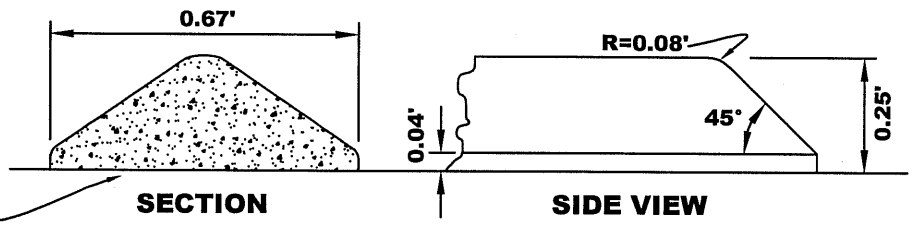

STD. RAISED TRAFFIC BARS

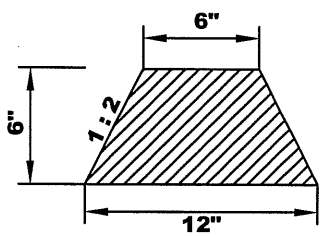

A.C. DIKE

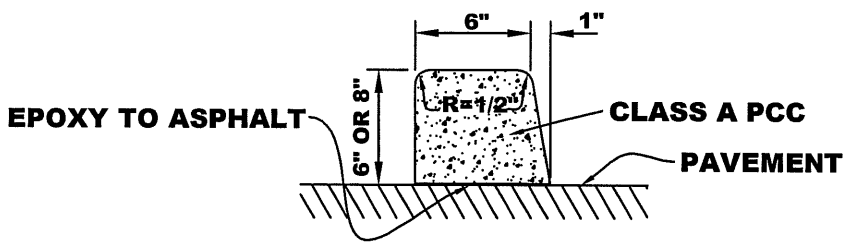

TYPE III-6 AND III-8 CURB

CURBS: TYPES I-6, I-8, III-6, III-8 AC DIKE, AND TRAFFIC BARS	APPROVED BY:	
	DATE : JUNE 30, 2006	DWG. 15C

2006 STANDARD DETAILS

NOTE :

THIS DRAWING DOES NOT ADDRESS SIDEWALK OR CURB RAMP REQUIREMENTS AT STREET INTERSECTIONS.

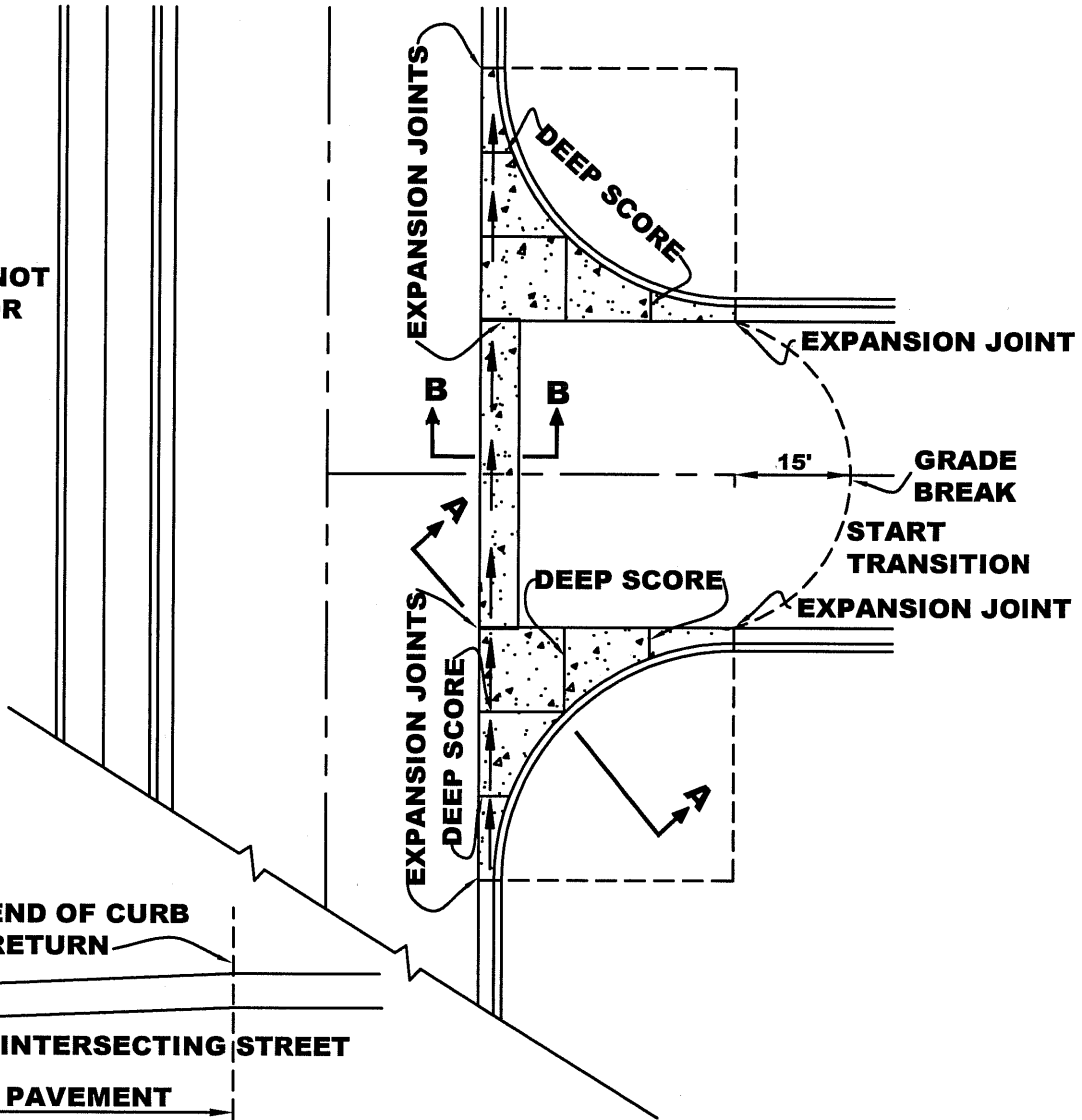

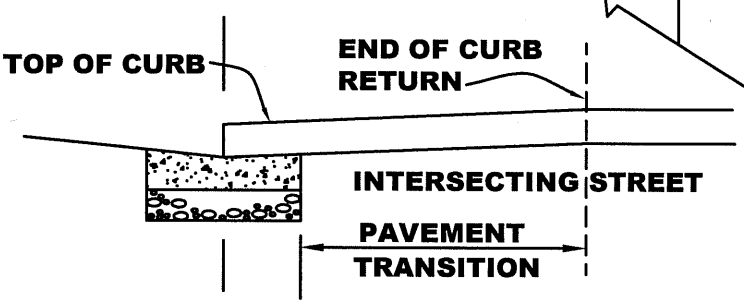

SECTION B-B

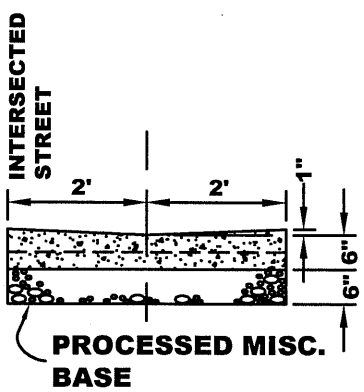

TYPICAL SECTION

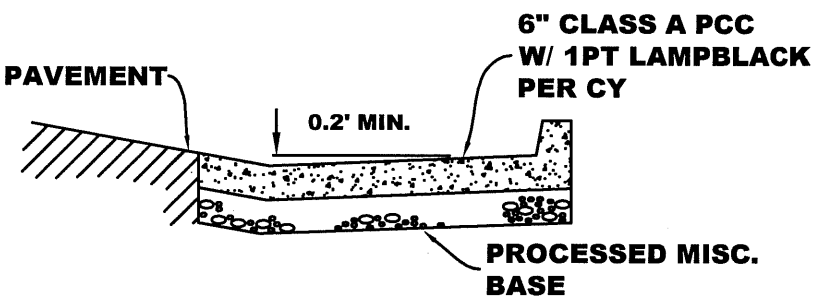

SECTION A-A

VALLEY GUTTER AT STREET INTERSECTION	APPROVED BY:	
	DATE : JUNE 30, 2006	DWG. 16C

2006 STANDARD DETAILS

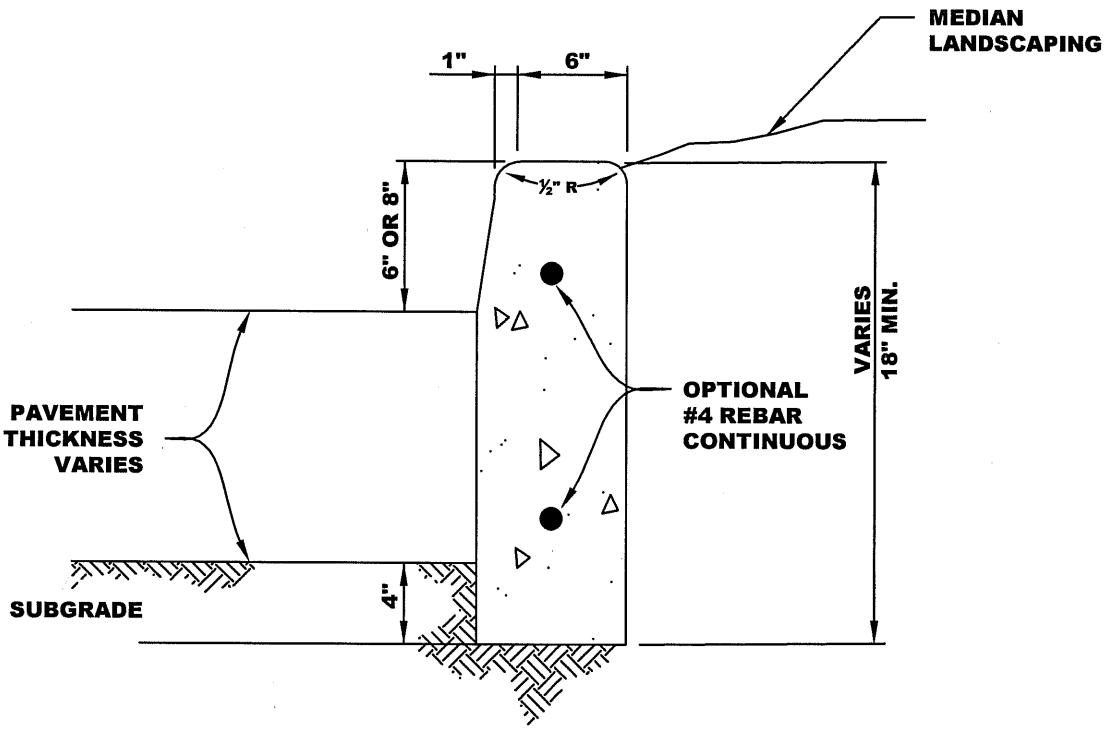

TYPE IV - 6 & IV - 8 DEEP VERTICAL. CURB

APPROVED BY:

DATE : JUNE 30, 2006

DWG. 17C

2006 STANDARD DETAILS

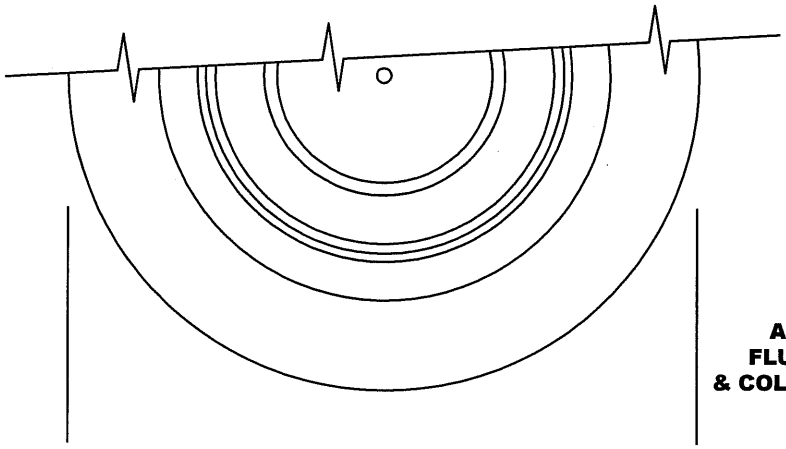

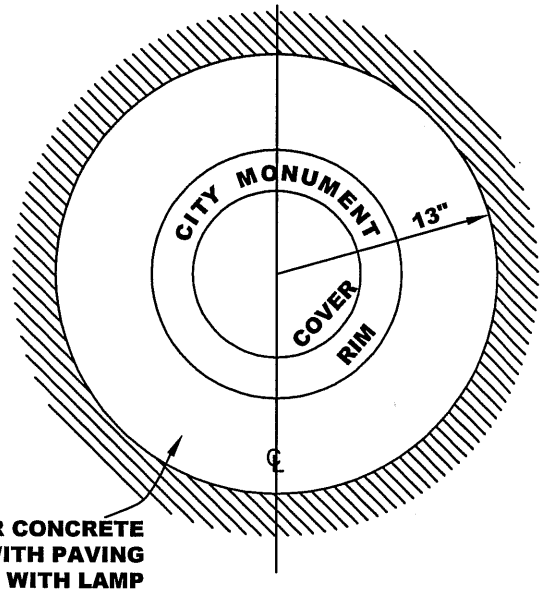

A.C. OR CONCRETE FLUSH WITH PAVING & COLORED WITH LAMP BLACK

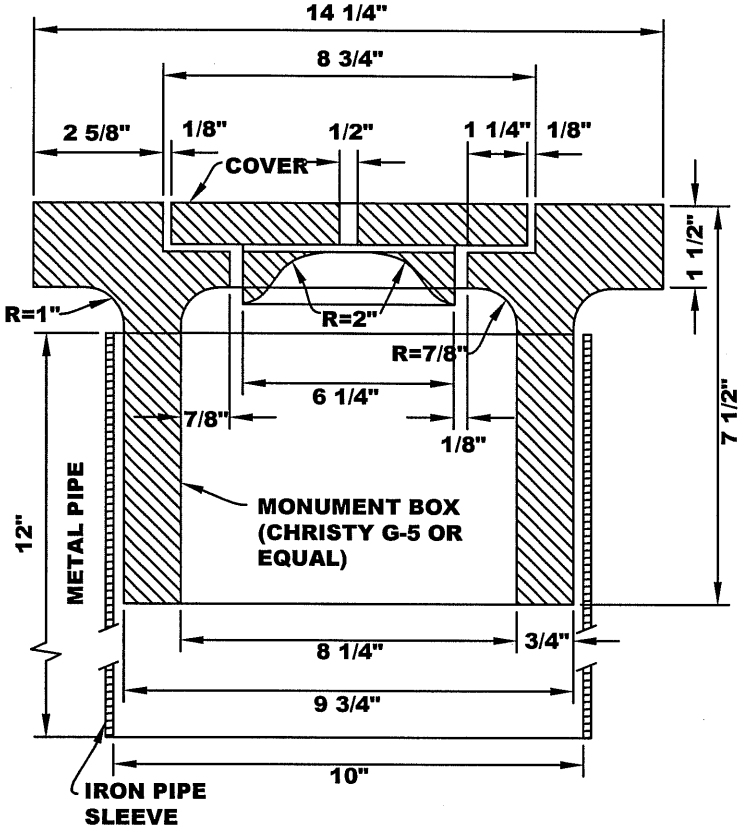

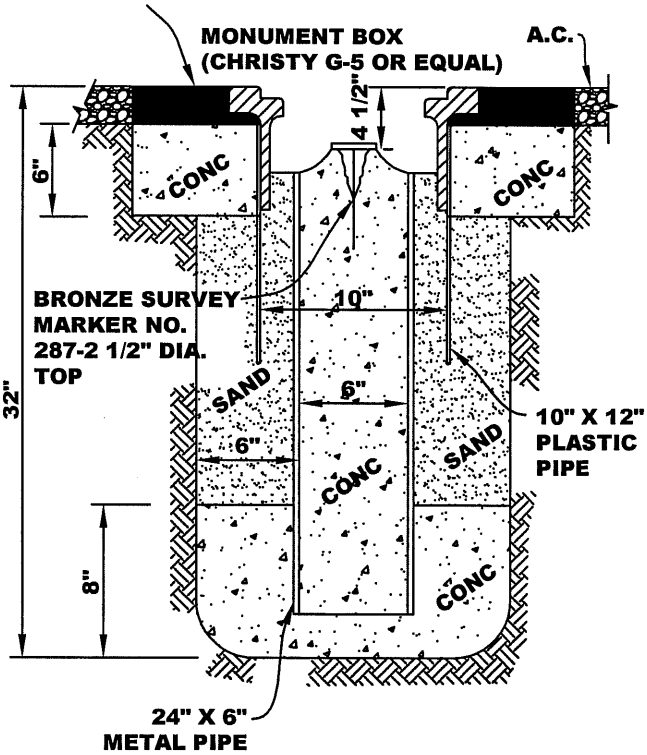

MONUMENT INSTALLATION DETAIL

2006 STANDARD DETAILS

STREET MONUMENT AND MONUMENT BOX	APPROVED BY:	
	DATE : JUNE 30, 2006	DWG. 21C

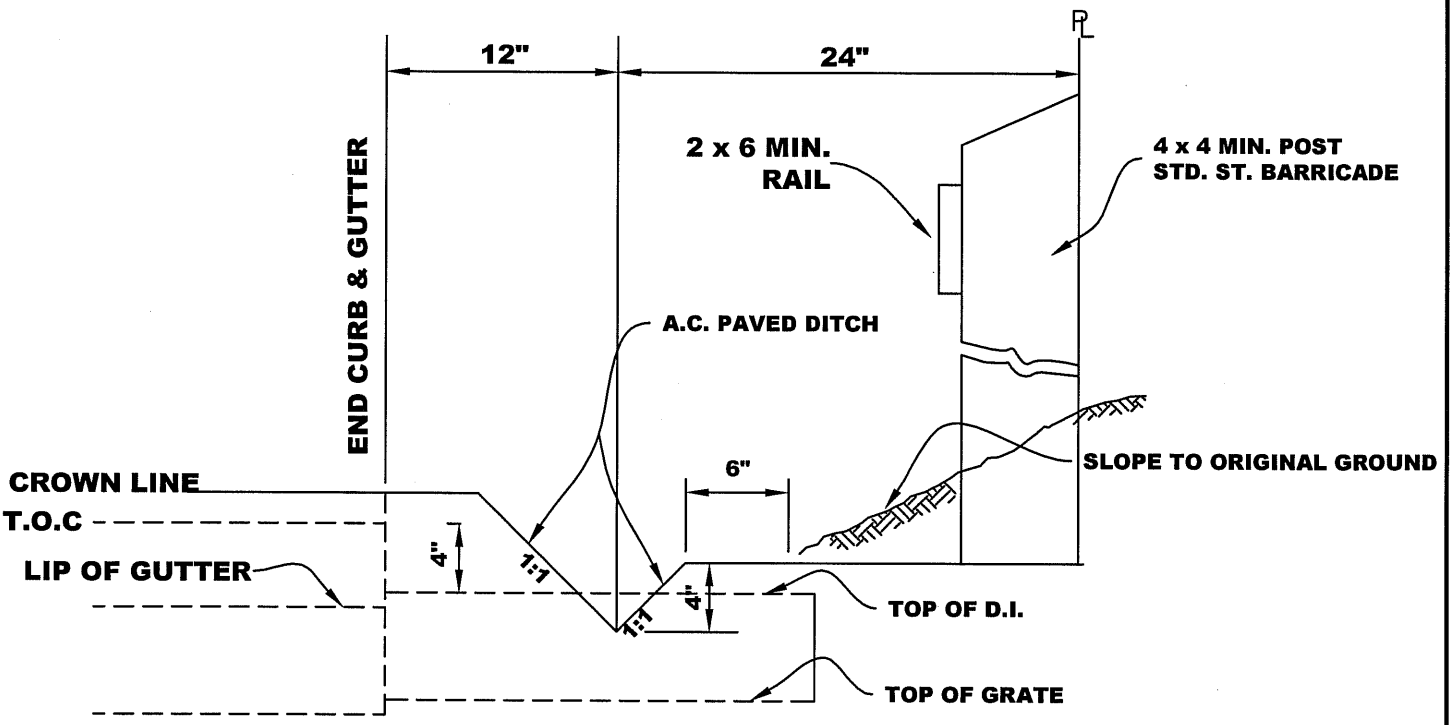

SECTION A - A

NO SCALE

NOTES:

1. END CURB & GUTTER 3' FROM PROPERTY LINE.
2. TOP OF D.I. TO BE 4" BELOW TOP OF CURB GRADE.

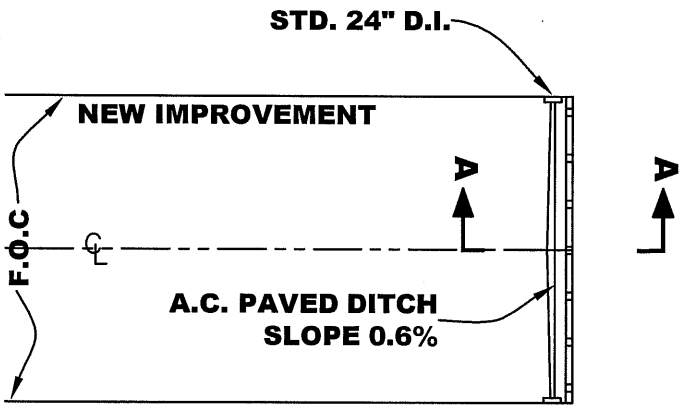

PLAN VIEW

TEMPORARY DEAD END STREET	APPROVED BY:	
	DATE : JUNE 30, 2006	DWG. 22C

2006 STANDARD DETAILS