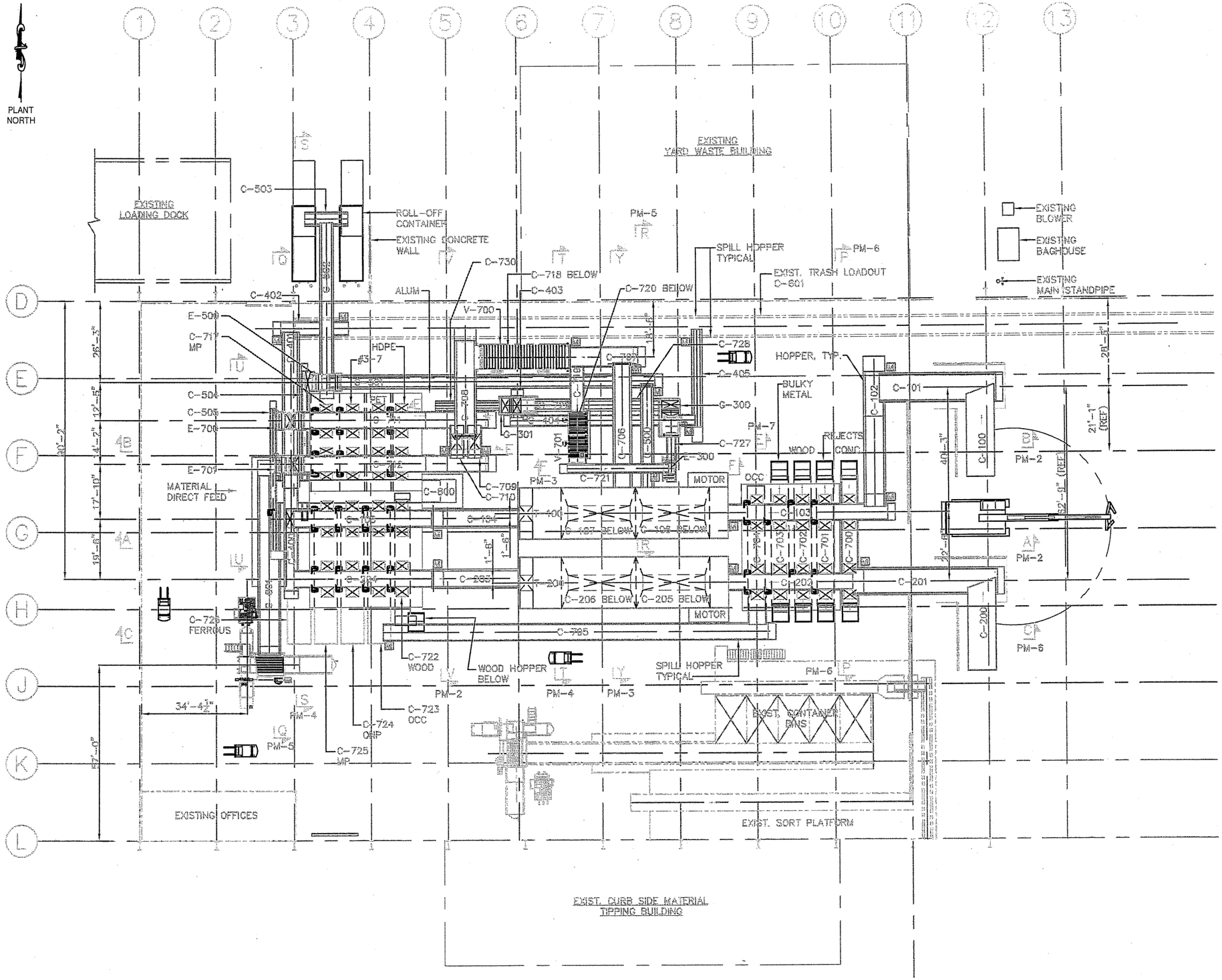

PROCESS EQUIPMENT GENERAL ARRANGEMENT

GENERAL NOTES:

1. MODIFY EXISTING CONVEYOR C-100 AS REQUIRED TO BE RE-INSTALLED AS INFEED CONVEYOR C-201. MODIFY EXISTING CONVEYOR C-701 AS REQUIRED TO BE RE-INSTALLED AS INFEED CONVEYOR C-101.
2. CONTRACTOR TO VERIFY ALL BUILDING DIMENSIONS AND THE EXACT LOCATION OF ALL EXISTING EQUIPMENT THAT WILL REMAIN IN PLACE DURING NEW CONSTRUCTION. NO FABRICATION OR NEW CONSTRUCTION SHALL START UNTIL ALL DIMENSIONS HAVE BEEN VERIFIED AND CONFIRMED.
3. ALL EXISTING EQUIPMENT SHALL BE PROTECTED FOR THE DURATION OF THE NEW WORK. DAMAGES INCURRED ON EXISTING EQUIPMENT DURING NEW CONSTRUCTION SHALL BE THE SOLE RESPPONSIBILITY OF THE CONTRACTOR TO RESTORE IN KIND WITH NO COST TO THE OWNER.
4. CONVEYOR SUPPORTS ARE NOT SHOWN ON DRAWINGS. CONTRACTOR TO PROVIDE SUPPORTS AS REQUIRED WITH DETAILS ON SHOP DRAWINGS FOR REVIEW AND APPROVAL. COORDINATE SUPPORT LOCATION WITH DRAWING PM-10 (TRAFFIC FLOW). CONVEYORS SHALL BE BEAR ON OR SUSPENDED OFF PLATFORM STEEL WHEREVER POSSIBLE TO CLEAR ACCESS FOR MOBILE EQUIPMENT. SEE PM-10 FOR FORKLIFT ACCESS. ALL SUPPORTS MUST CONTAIN (+/-) 12" VERTICAL FIELD ADJUSTMENT.
5. CONVEYOR ACCESSORIES SUCH AS TOP & RETURN IDLERS, SIDE SKIRTS (WITH STIFFENERS AS REQUIRED), WIPERS, GREASE FITTINGS AND SKIRT EXTENSIONS SHALL BE FURNISHED BY THE CONVEYOR FABRICATOR AS APPROVED BY THE OWNER'S ENGINEER.
6. SKIRT HEIGHT IS TAKEN FROM THE TOP OF CONVEYOR BELT.
7. SKIRT LENGTH TO BE FULL LENGTH OF CONVEYOR INCLUDING OUTSIDE FACE OF HEAD AND TAIL PULLEYS, UNLESS OTHERWISE NOTED.
8. CONVEYOR AREA BETWEEN MOVING BELT, SUPPORT IDLERS AND PULLEYS MUST HAVE OSHA APPROVED GUARDS FOR PERSONNEL PROTECTION.
9. CENTER TO CENTER PULLEY DIMENSION DOES NOT INCLUDE TAKE-UP.
10. ALL CONVEYORS TO HAVE DOUBLE BACK SEAL OVER TAIL PULLEY TO BE DETAILED BY FABRICATOR FOR APPROVAL.
11. ALL CONVEYORS TO HAVE DRIP PANS WITH PROVISIONS FOR MATERIAL BUILD UP CLEAN OUT.
12. ALL CONVEYOR TRANSITION POINTS SHALL BE PROVIDED WITH CHUTES AND HOPPERS TO PREVENT MATERIAL SPILLAGE, DETAILED BY CONVEYOR FABRICATOR FOR APPROVAL.
13. EQUIPMENT FABRICATOR SHALL SUPPLY INFEED/DISCHARGE CHUTES AND HOPPERS FOR THEIR EQUIPMENT TO INSURE FIT. CONTRACTOR TO COORDINATE EQUIPMENT/CONVEYOR INTERFACE FOR PROPER FIT.

"DRAWING IN PROGRESS - UNDER REVIEW"
PRELIMINARY TO REV. C 5/23/06
NOT FOR CONSTRUCTION

REV	DESCRIPTION	DATE	BY	CHK
C	ISSUED FOR BID			
B	ISSUED FOR CLIENT'S REVIEW	3/31/06	RS	
A	ISSUED FOR CLIENT REVIEW	3/10/06	V.V.	A.A

RRT DESIGN & CONSTRUCTION
A Service of Enviro-Services & Constructors, Inc.

CITY OF SUNNYVALE
SUNNYVALE SMART STATION RETROFIT
Sunnyvale, CA

PROCESS EQUIPMENT
GENERAL ARRANGEMENT

PROPRIETARY DATA
THIS DOCUMENT IS THE PROPERTY OF ENVIRO-SERVICES & CONSTRUCTORS, INC. AND CONTAINS CONFIDENTIAL INFORMATION. ANY REPRODUCTION OR UNAUTHORIZED USE WITHOUT WRITTEN CONSENT OF ENVIRO-SERVICES & CONSTRUCTORS, INC. WILL BE SUBJECT TO PROSECUTION.

	BY	DATE
DRAWN	RS	3/10/06
CHECKED	NE	3/10/06
DESIGNED	RS	3/10/06

PROJ. No: 559-002 SCALE: 1/16" = 1'-0"

RRT Design & Construction

DWG. NO: PM-1 C

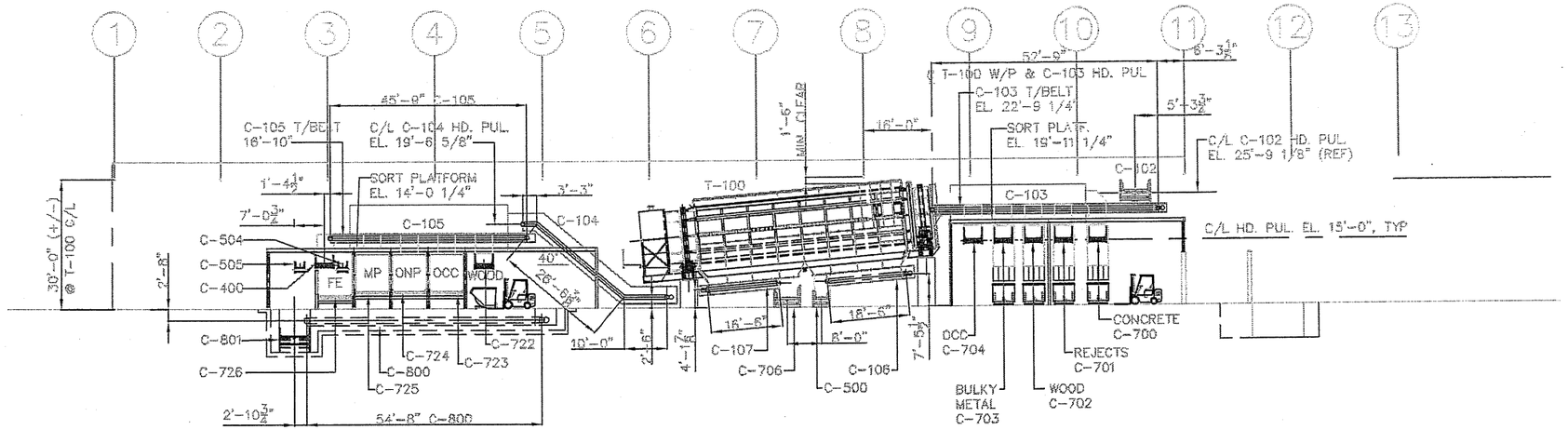

SECTION 'A-A'

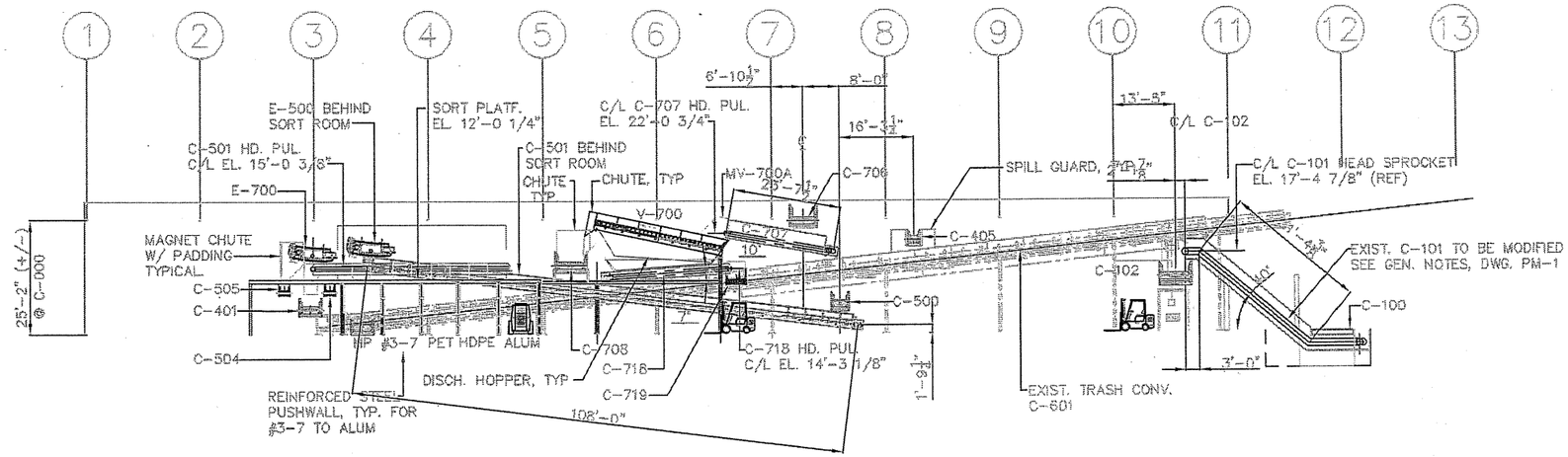

SECTION 'B-B'

"DRAWING IN PROGRESS - UNDER REVIEW"
PRELIMINARY TO REV. C 5/23/06
NOT FOR CONSTRUCTION

REV	DESCRIPTION	DATE	BY	CHK
C	ISSUED FOR BID			
B	ISSUED FOR CLIENT'S REVIEW	3/31/06	RS	
A	ISSUED FOR CLIENT REVIEW	3/10/06	V.V.	A.A

RRT DESIGN & CONSTRUCTION
A Service of Enviro-Services & Constructors, Inc.

CITY OF SUNNYVALE
SUNNYVALE SMART STATION RETROFIT

PROCESS EQUIPMENT
SECTIONS 'A-A' & 'B-B'

PROPRIETARY DATA
THIS DOCUMENT IS THE PROPERTY OF ENVIRO-SERVICES & CONSTRUCTORS, INC. AND CONTAINS CONFIDENTIAL INFORMATION. ANY REPRODUCTION OR UNAUTHORIZED USE WITHOUT WRITTEN CONSENT OF ENVIRO-SERVICES & CONSTRUCTORS, INC. WILL BE SUBJECT TO PROSECUTION.

	BY	DATE
DRAWN	RS	3/16/06
CHECKED	NE	3/16/06
DESIGNED	RS	3/10/06
APPROVED		

PROJ. No: 559-002
SCALE: 3/32" = 1'-0"
DWG. NO: PM-2
CAD FILE: Review Issue

RRT Design & Construction
ENGINEERING • ARCHITECTURE • CONSTRUCTION

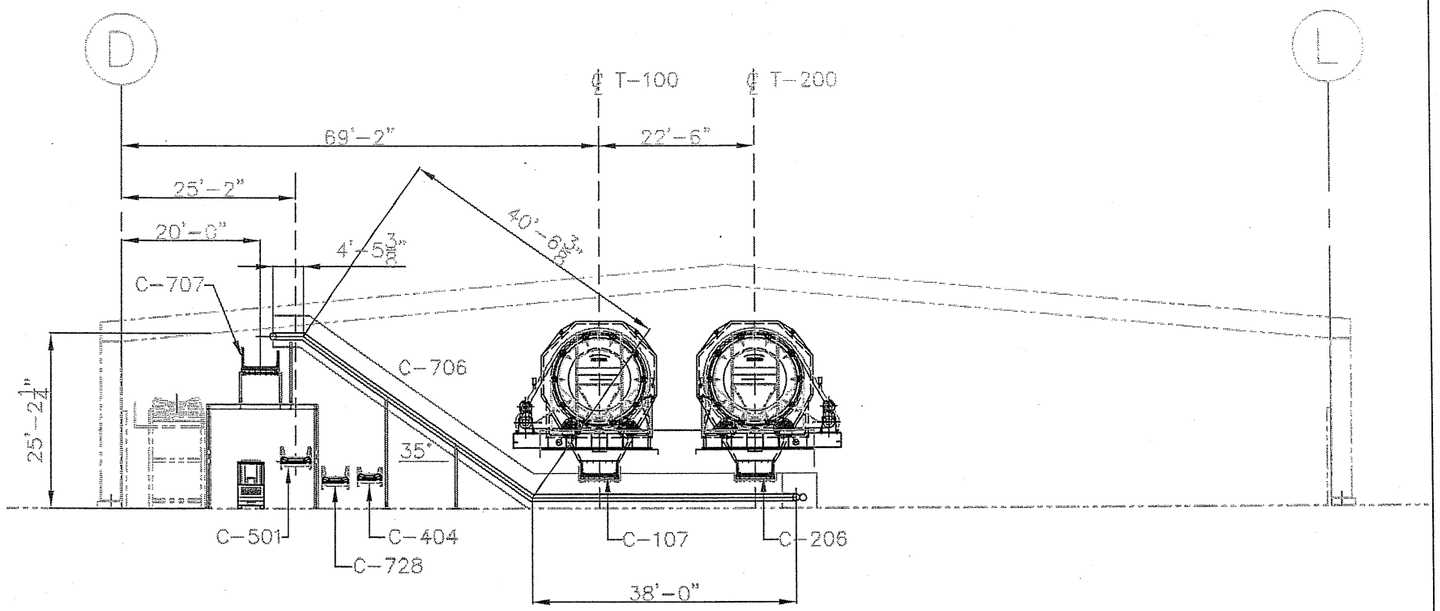

SECTION 'Y-Y'

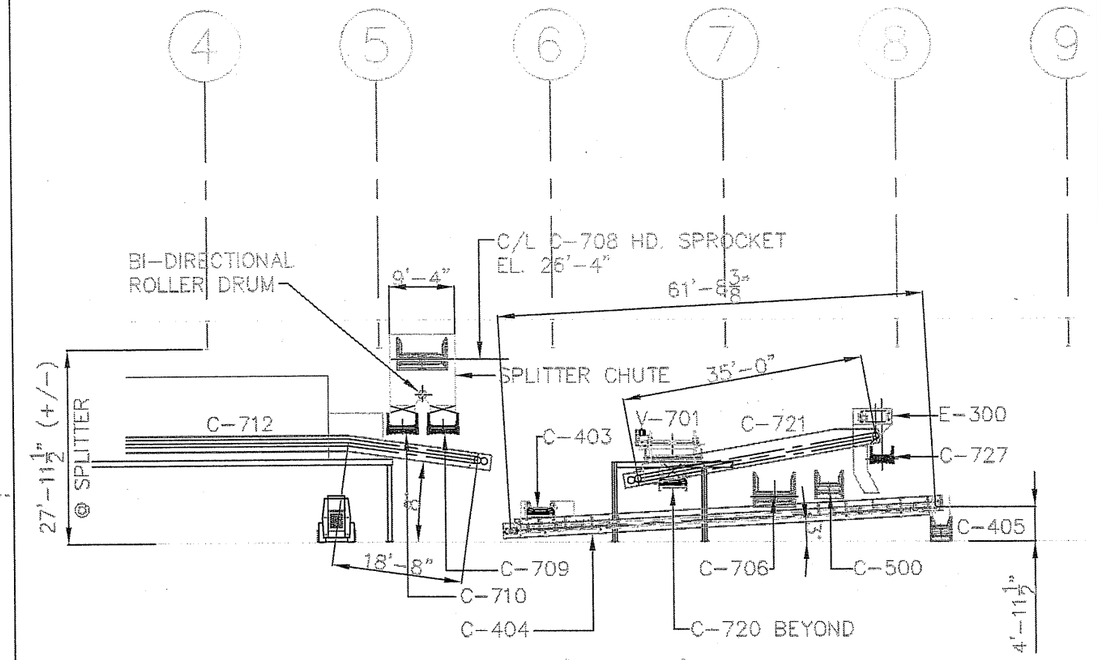

SECTION 'F-F'

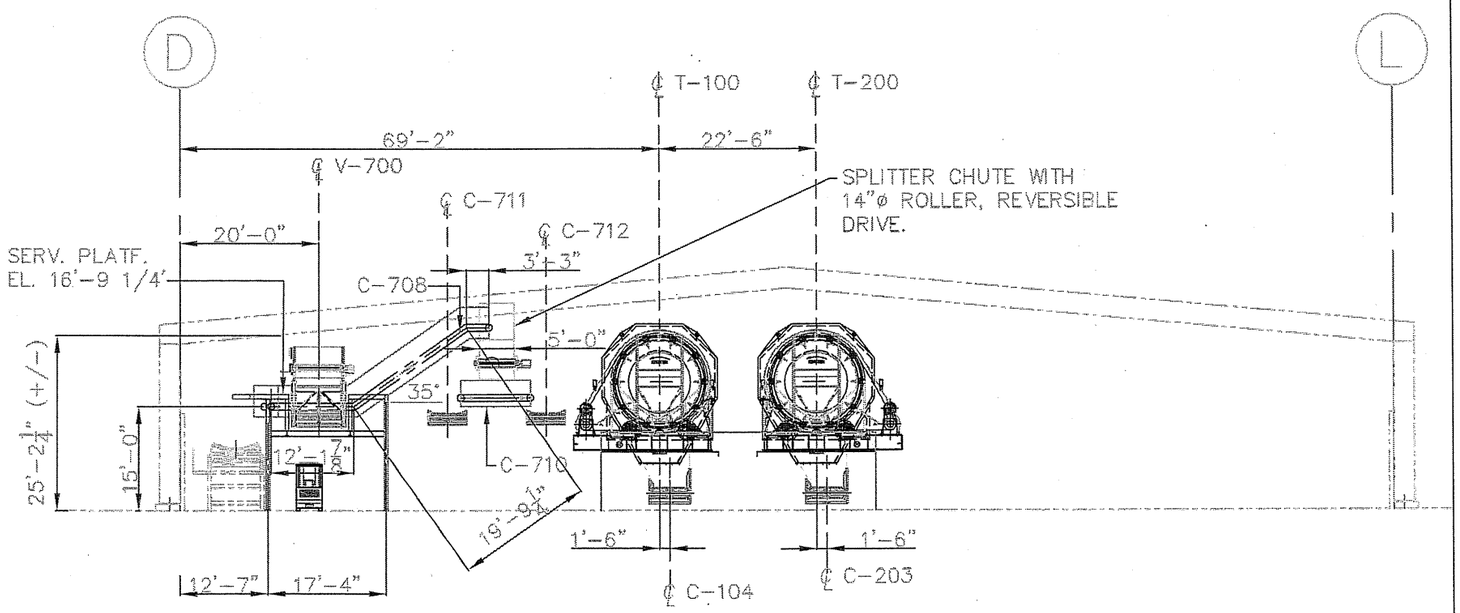

SECTION 'V-V'

"DRAWING IN PROGRESS - UNDER REVIEW"
PRELIMINARY TO REV. C 5/23/06
NOT FOR CONSTRUCTION

REV	DESCRIPTION	DATE	BY	CHK
C	ISSUED FOR BID			
B	ISSUED FOR CLIENT'S REVIEW	3/31/06	RS	
A	ISSUED FOR CLIENT REVIEW	3/10/06	V.V.	A.A.

RRT DESIGN & CONSTRUCTION
A Service of Enviro-Services & Constructors, Inc.

CITY OF SUNNYVALE
SUNNYVALE SMART STATION RETROFIT

PROCESS EQUIPMENT
SECTIONS 'F-F' ; 'V-V' & 'Y-Y'

PROPRIETARY DATA
THIS DOCUMENT IS THE PROPERTY OF ENVIRO-SERVICES & CONSTRUCTORS, INC. AND CONTAINS CONFIDENTIAL INFORMATION. ANY REPRODUCTION OR UNAUTHORIZED USE WITHOUT WRITTEN CONSENT OF ENVIRO-SERVICES & CONSTRUCTORS, INC. WILL BE SUBJECT TO PROSECUTION.

	BY	DATE
DRAWN	RS	3/10/06
CHECKED	NE	3/10/06
DESIGNED	RS	3/10/06

PROJ. No: 559-002
SCALE: 3/32 = 1'-0"
DWG. NO: PM-3
C

RRT Design & Construction
ENGINEERING • ARCHITECTURE • CONSTRUCTION
CAD FILE: Review Issue

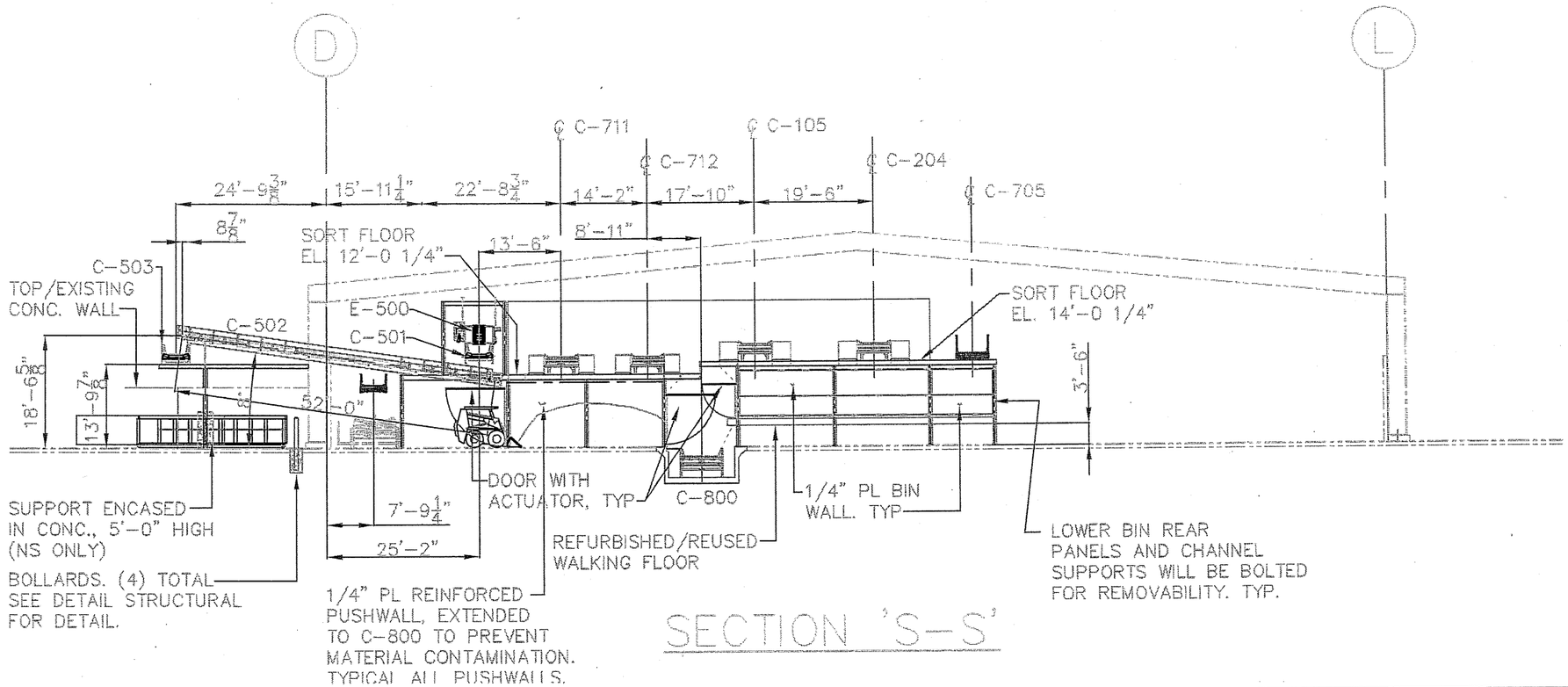

SECTION 'S-S'

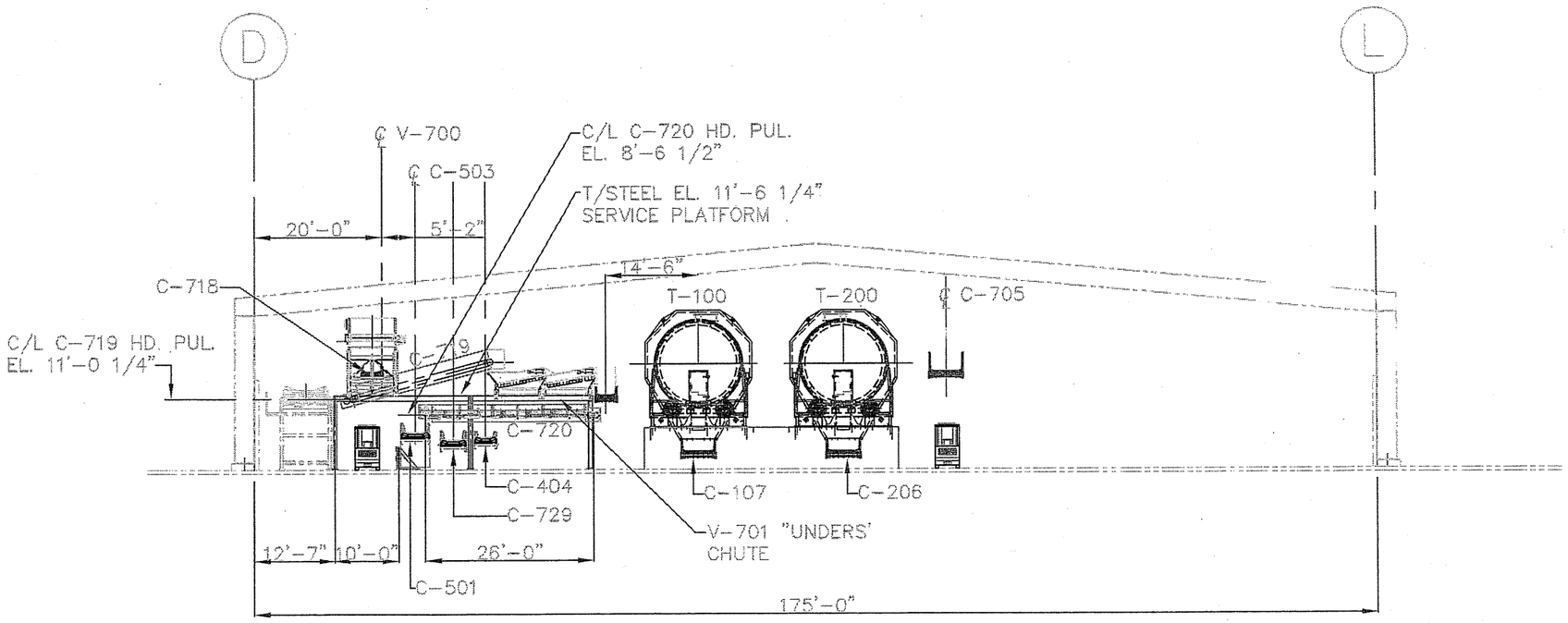

SECTION 'T-T'

"DRAWING IN PROGRESS - UNDER REVIEW"
PRELIMINARY TO REV. C 5/23/06
NOT FOR CONSTRUCTION

REV	DESCRIPTION	DATE	BY	CHK
C	ISSUED FOR BID			
B	ISSUED FOR CLIENT'S REVIEW	3/31/06	RS	
A	ISSUED FOR CLIENT REVIEW	3/10/06	V.V.	A.A.

RRT DESIGN & CONSTRUCTION
A Service of Enviro-Services & Constructors, Inc.

CITY OF SUNNYVALE
SUNNYVALE SMART STATION RETROFIT

PROCESS EQUIPMENT
SECTIONS 'S-S' & 'T-T'

PROPRIETARY DATA
THIS DOCUMENT IS THE PROPERTY OF ENVIRO-SERVICES & CONSTRUCTORS, INC. AND CONTAINS CONFIDENTIAL INFORMATION. ANY REPRODUCTION OR UNAUTHORIZED USE WITHOUT WRITTEN CONSENT OF ENVIRO-SERVICES & CONSTRUCTORS, INC. WILL BE SUBJECT TO PROSECUTION.

	BY	DATE
DRAWN	RS	3/10/06
CHECKED	NE	3/10/06
DESIGNED	RS	3/10/06
APPROVED		

PROJ. No: 559-002
SCALE: 3/32" = 1'-0"
DWG. NO: PM-4
CAD FILE: Review Issue

RRT Design & Construction
ENGINEERING • ARCHITECTURE • CONSTRUCTION

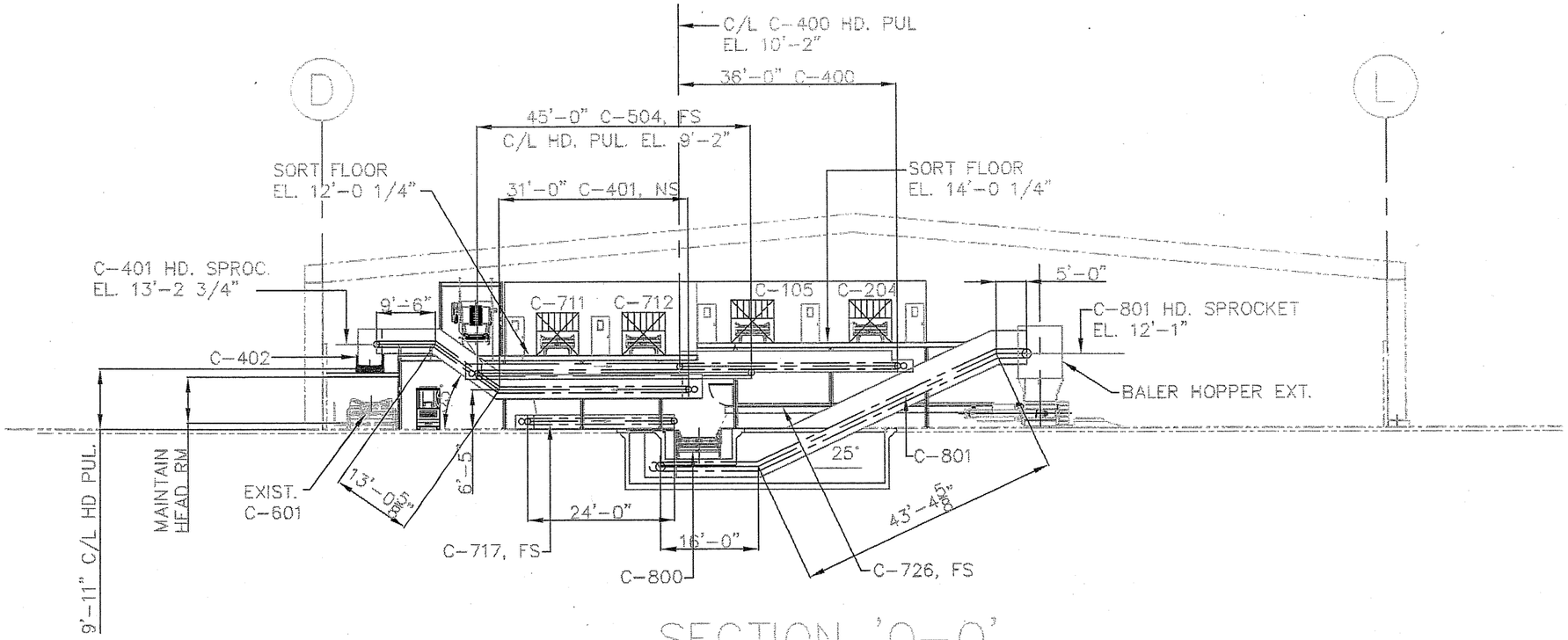

SECTION 'Q-Q'

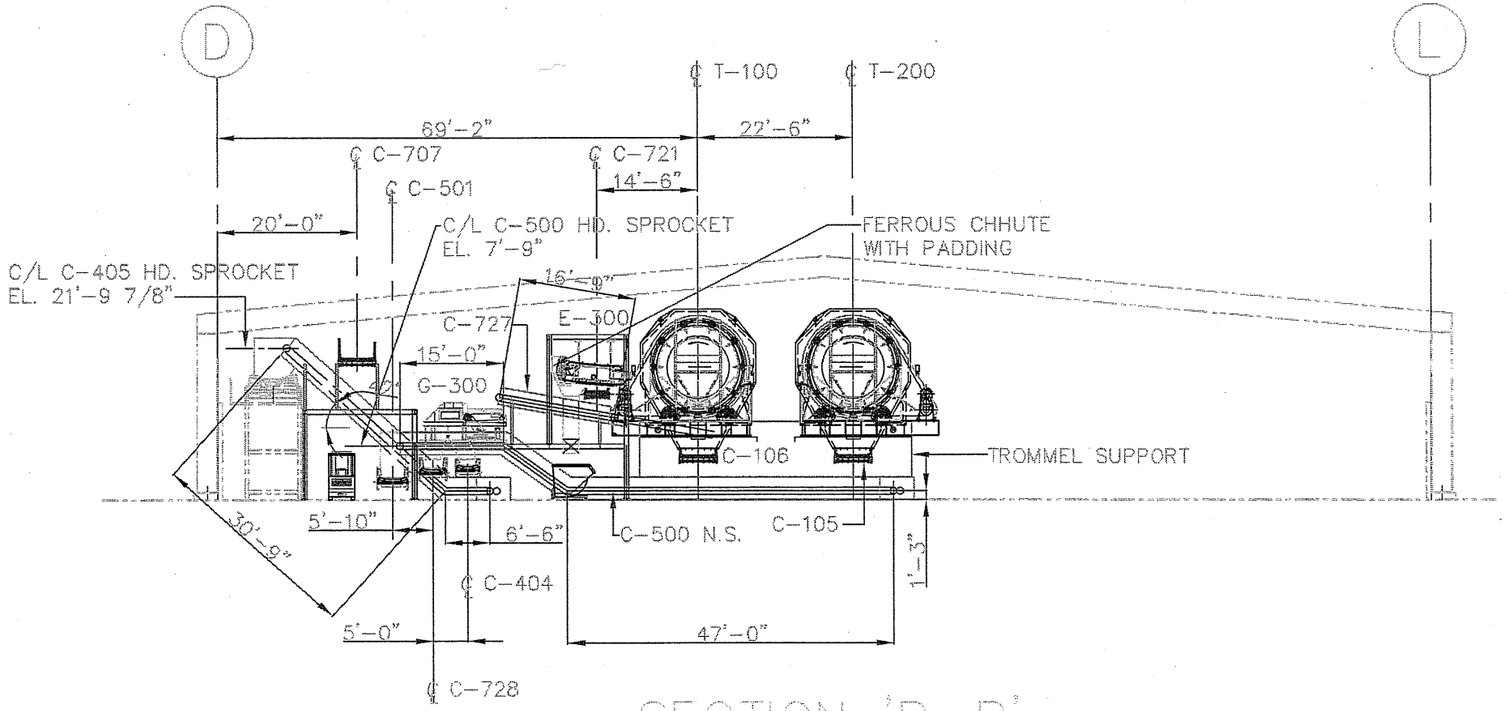

SECTION 'R-R'

"DRAWING IN PROGRESS - UNDER REVIEW"
PRELIMINARY TO REV. C 5/23/06
NOT FOR CONSTRUCTION

REV	DESCRIPTION	DATE	BY	CHK
C	ISSUED FOR BID			
B	ISSUED FOR CLIENT'S REVIEW	3/31/06	RS	
A	ISSUED FOR CLIENT REVIEW	3/10/06	V.V.	A.A

RRT DESIGN & CONSTRUCTION
A Service of Enviro-Services & Constructors, Inc.

CITY OF SUNNYVALE
SUNNYVALE SMART STATION RETROFIT

PROCESS EQUIPMENT
SECTIONS 'Q-Q' & 'R-R'

PROPRIETARY DATA
THIS DOCUMENT IS THE PROPERTY OF ENVIRO-SERVICES & CONSTRUCTORS, INC. AND CONTAINS CONFIDENTIAL INFORMATION. ANY REPRODUCTION OR UNAUTHORIZED USE WITHOUT WRITTEN CONSENT OF ENVIRO-SERVICES & CONSTRUCTORS, INC. WILL BE SUBJECT TO PROSECUTION.

	BY	DATE
DRAWN	RS	3/10/06
CHECKED	NE	3/10/06
DESIGNED	RS	3/10/06

PROJ. No: 559-002 SCALE: 3/32" = 1'-0"
DWG. No: PM-5 C

RRT Design & Construction