WATER SERVICE INSTALLATION
3" THROUGH 10" METERS

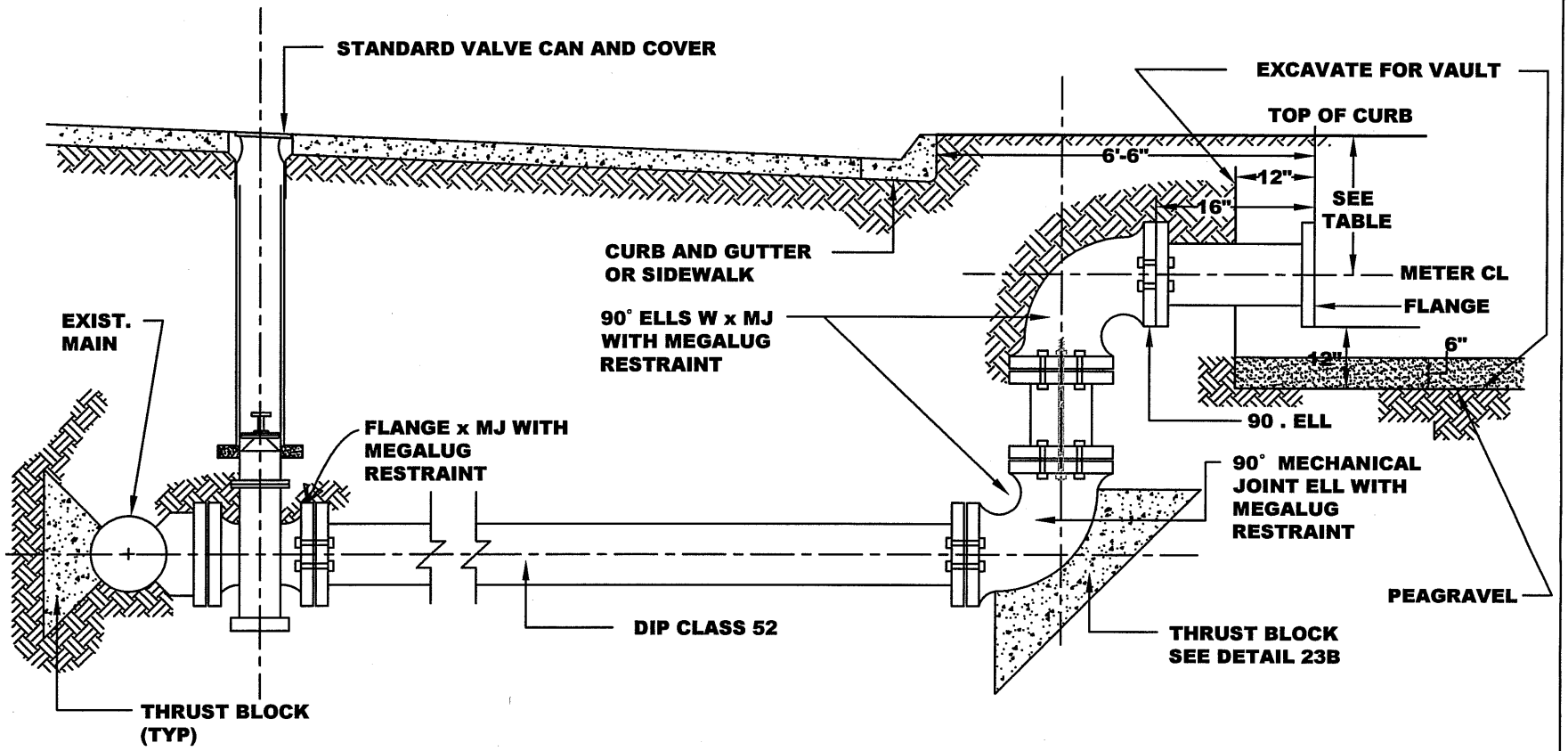

NOTES:

1. VAULTS WILL BE SET IN PUBLIC RIGHT - OF - WAY.
2. WHERE MOUND LANDSCAPPING IS USED, MOUND SHALL BE BEHIND THE VAULT, AND A RETAINING WALL SHALL BE CONSTRUCTED WITHIN THE MOUND AROUND THE VAULT.
3. AN EXCAVATED HOLE, COMPLETE WITH PEAGRAVEL BASE AND IN ACCORDANCE WITH THESE DETAILS, SHALL BE PROVIDED PRIOR TO CITY INSTALLATION OF VAULT, METER AND APPURTENANCES.

SERVICE SIZE	COMPOUND METER		TURBINE METER		MFM METER	
	TOC TO METER CENTERLINE	EXCAVATION SIZE LxW	TOC TO METER CENTERLINE	EXCAVATION SIZE LxW	TOC TO METER CENTERLINE	EXCAVATION SIZE LxW
4"	22"	6'x8'	24"	8'x5'	24"	5'x5'
6"	28"	6'x8'	26"	10'x6'	24"	6'x7'
8"	NA	NA	28"	11'x7'	28"	7'x8'
10"	NA	NA	NA	NA	28"	7'x8'

NA = NOT AVAILABLE

DATE : JUNE 30, 2006
REVISED : APRIL, 2007

APPROVED BY:

12B