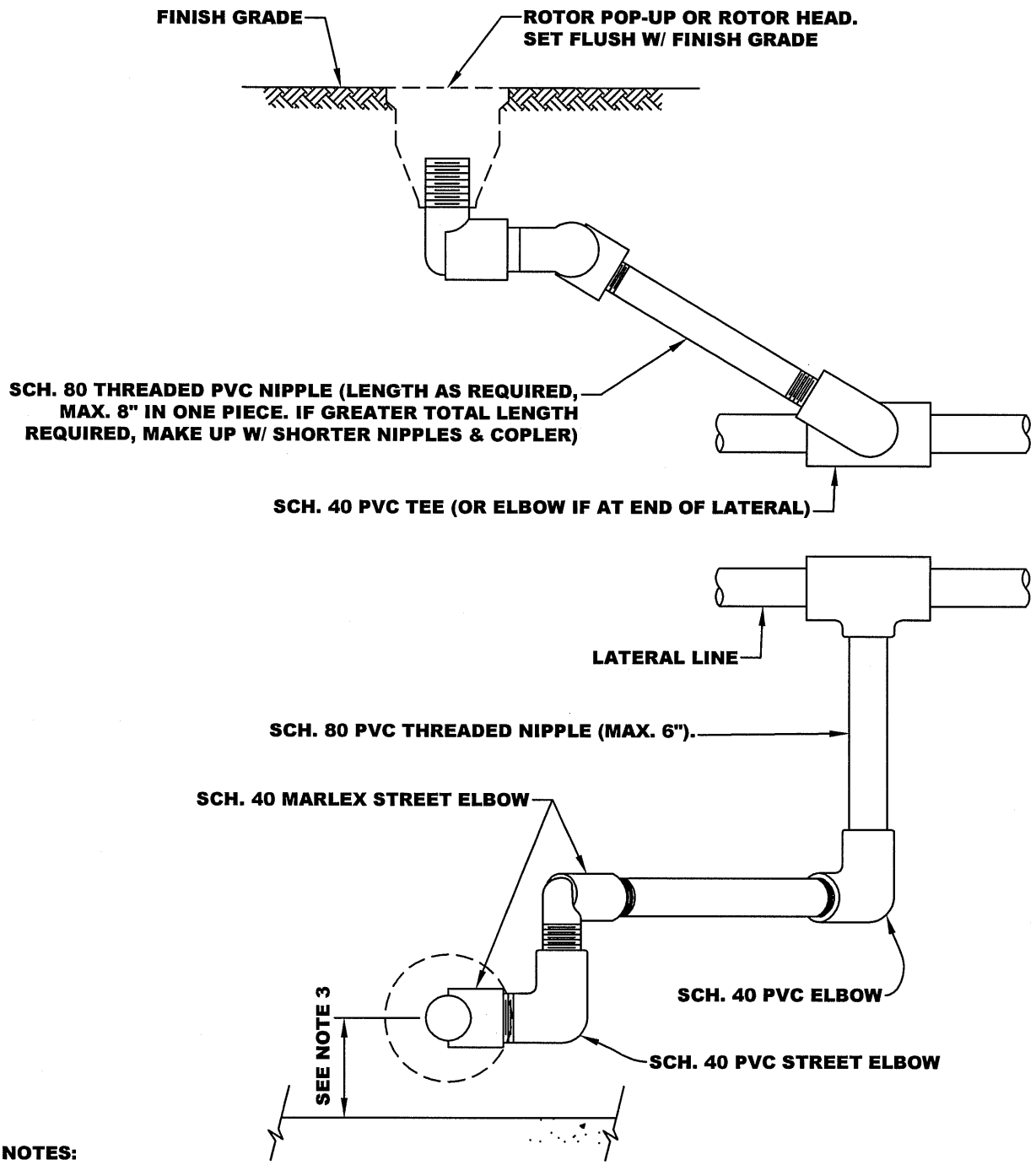

NOTES:

1. INSTALL CHECK VALVE AT ALL HEADS SUBJECT TO LATERAL LINE DRAINAGE.
2. ADJUST ROTOR HEAD FOR MIN. OVERSPRAY ONTO ADJ. WALKS, ASPHALT, BLDGS, ETC.
3. LOCATE 12" AWAY FROM ADJ. BLDS OR FENCE. LOCATE MIN. 6" AWAY FOR ADJACENT SIDEWALKS, CURBS, OR HEADERBOARDS.
4. ALL JOINTS HAND TIGHT TO ALLOW MOVEMENT.

POP-UP ROTOR HEAD	APPROVED BY:	
	DATE : JUNE 30, 2006	DWG. 3F

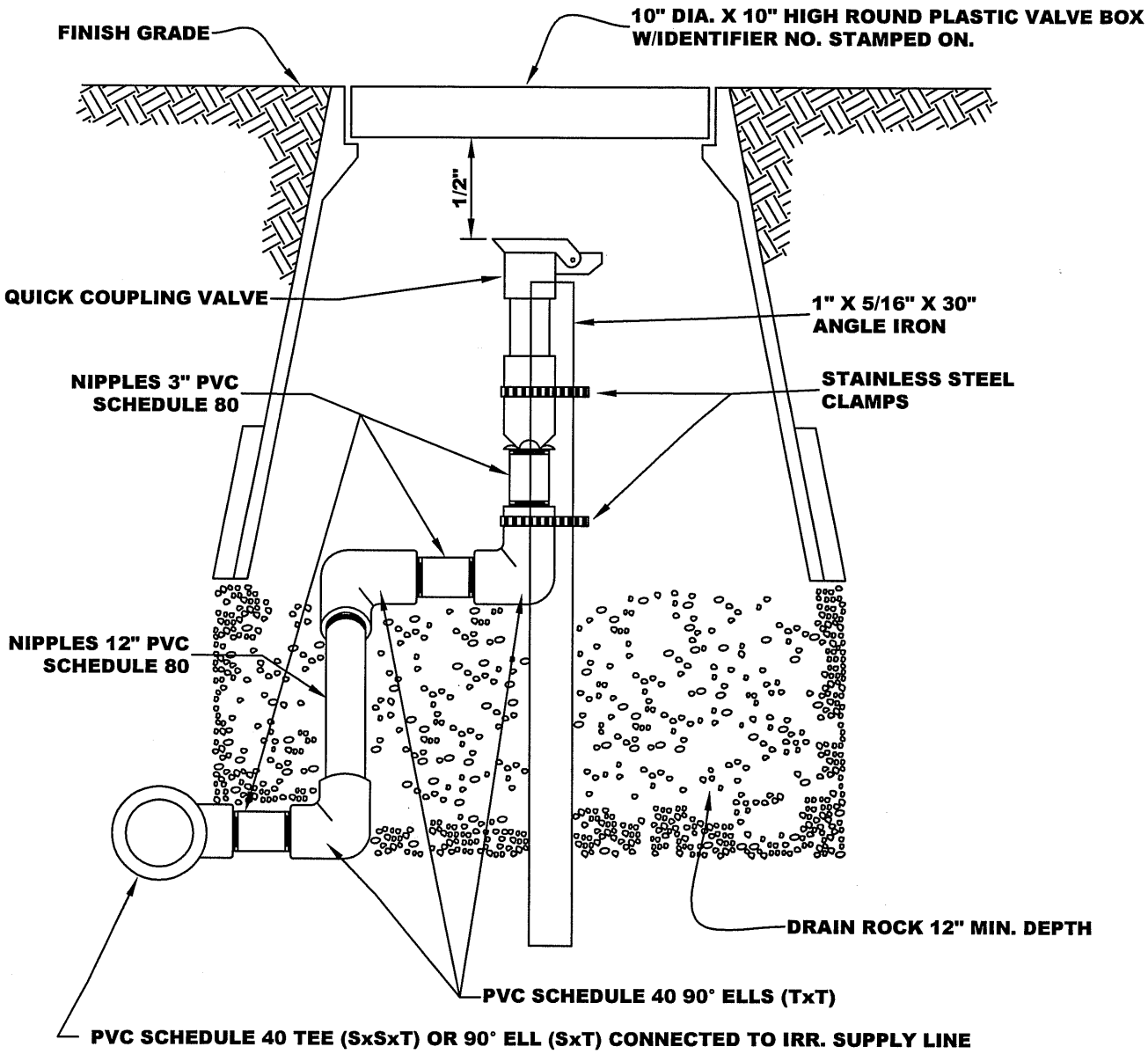

NOTES:

1. LOCATE Q.C.V. ADJACENT TO R.C.V. IN GROUND COVER AREAS WHERE POSSIBLE.

2. LOCATE 12" AWAY FROM ADJACENT BUILDINGS OR FENCES. LOCATE MIN. 6" AWAY FROM ADJACENT SIDEWALKS, CURBS, OR HDRBOARDS.

3. INSTALL CHECK VALVE AT HEAD LOCATIONS THAT ARE SUBJECT TO LATERAL DRAINAGE.

4. ALL JOINTS HAND TIGHT TO ALLOW MOVEMENT.

5. SET TOP OF BOX 1" ABOVE FINISH GRADE IN SHRUB AREAS.

QUICK COUPLER VALVE	APPROVED BY:	
	DATE : JUNE 30, 2006	DWG. 4F

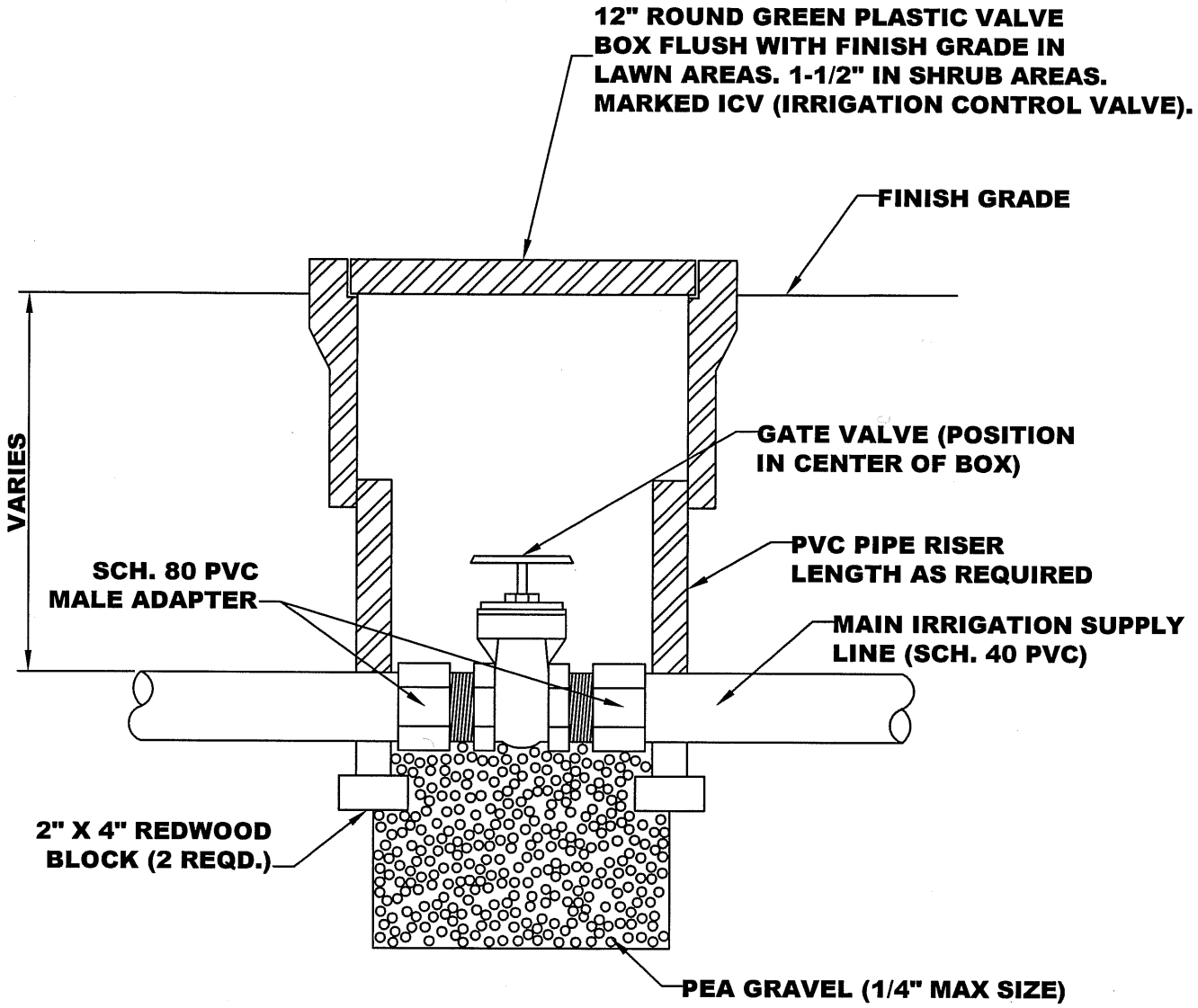

GATE VALVE-IRRIGATION SYSTEM

APPROVED BY:

DATE : JUNE 30, 2006

DWG. 7F

2006 STANDARD DETAILS

Evolution DX2 Stainless Steel Pedestal Cabinet Installation

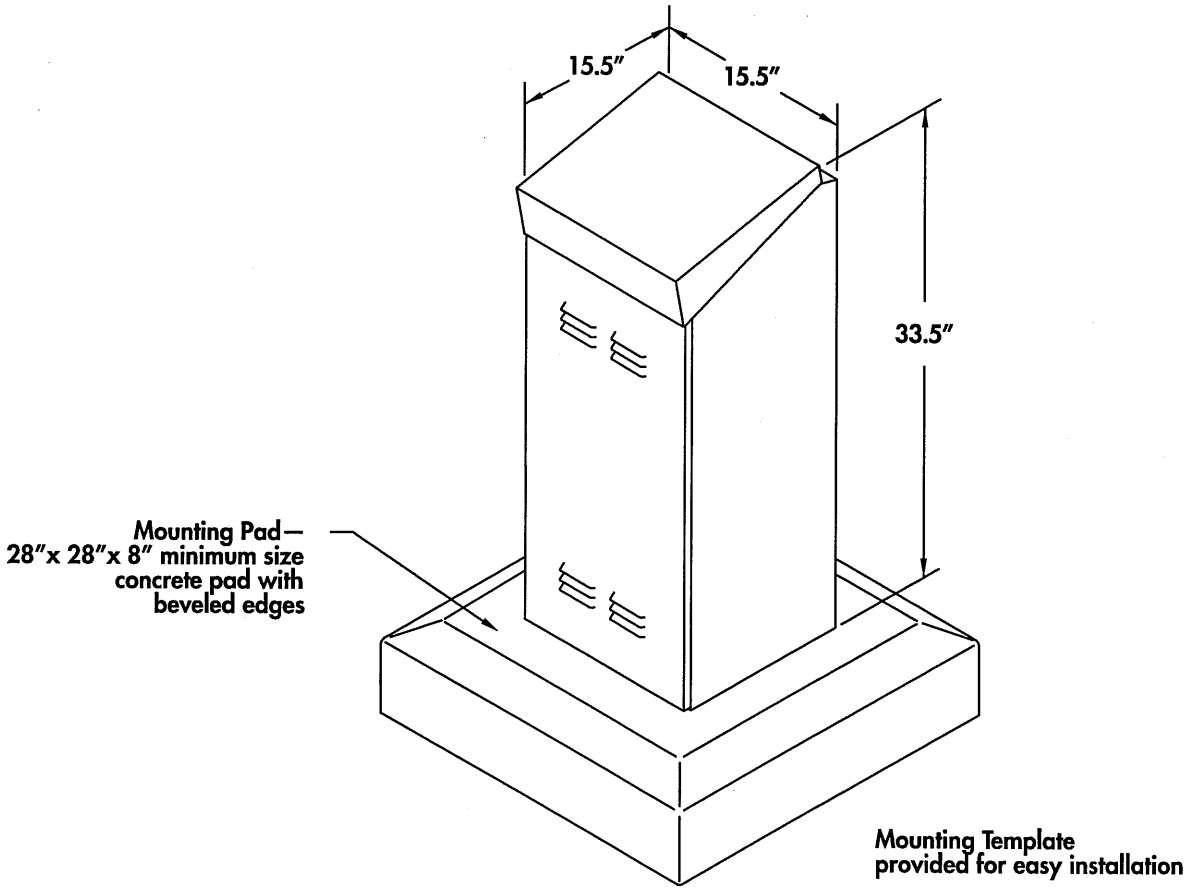

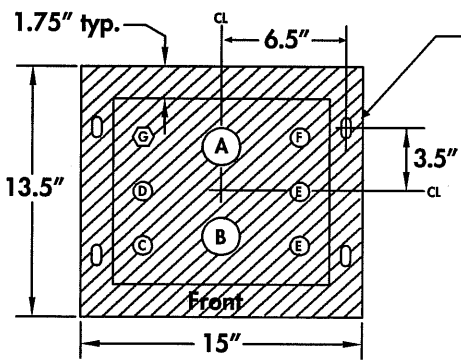

Item	Description
A, B	2" conduit - station wiring
C	1" conduit - communication
D	AC power conduit
E	1" conduit - sensor wiring
F	External antenna
G	Grounding rod

RMIS Part No. 500501 Rev. B

BOLT AND CONDUIT TEMPLATE

RAIN MASTER OR EQUAL

IRRIAGTION CONTROLER PEDESTAL TYPE

APPROVED BY:

DATE : JUNE 30, 2006

DWG. 8F-2

Vandal-Resistant Stainless Steel Evolution DX2 Wall-Mount Installation

1. Position the controller so that the front panel display appears slightly above eye level.
2. For the top bracket, attach 3/8" lag bolts to wall on 16" center. Leave a 1/8" gap between lag bolt head and wall.
3. Hang enclosure on lag bolts.
4. Drill and mount the two lower 3/8" lag bolts using the bottom brackets as a guide.

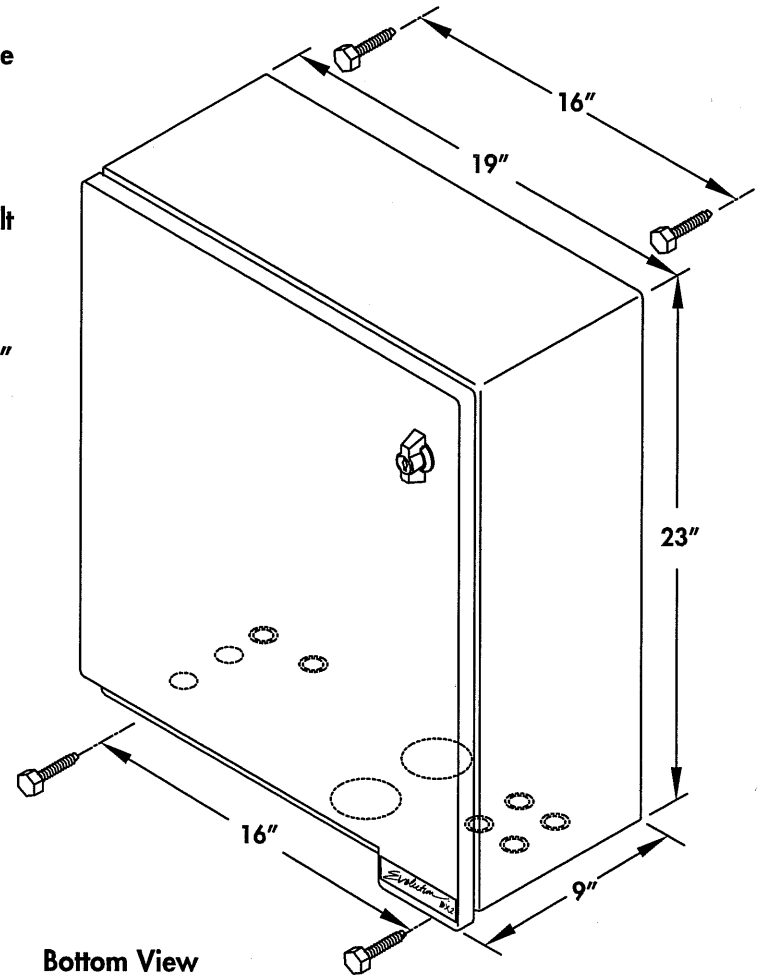

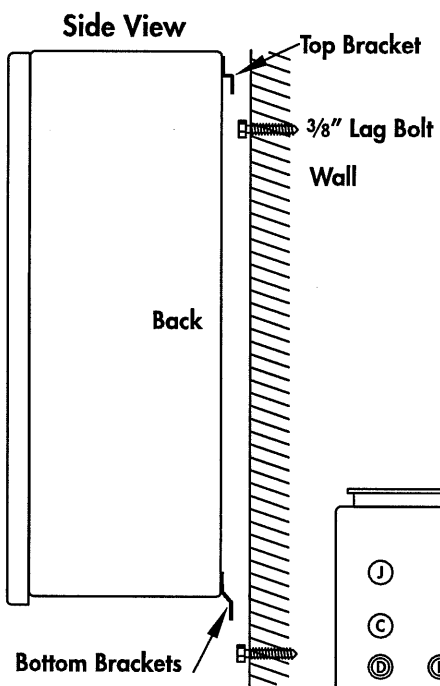

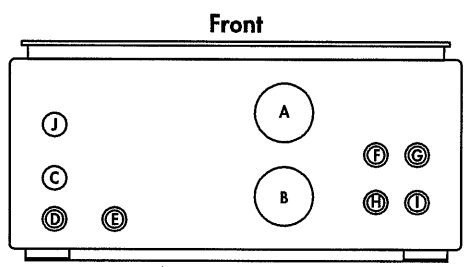

Knockouts		
Item	Accomodates	Description
A, B	2" conduit	Station Wires
C	1/2" conduit	Incoming AC
D	1/2" or 3/4" conduit	Hardwire Comm or Ext. Antenna
E	1/2" or 3/4" conduit	Hardwire Communications
F, G, H, I	1/2" or 3/4" conduit	Sensor Wiring
J		Reserved

RMS Part No.500503 Rev. A

RAIN MASTER OR EQUAL

IRRIGATION CONTROLER WALL MOUNT TYPE

APPROVED BY:

DATE : JUNE 30, 2006

DWG. 8F-3

IRRIGATION CONTROLER AC WIRING DIAGRAM

EVOLUTION DX2 • AC WIRING DIAGRAM

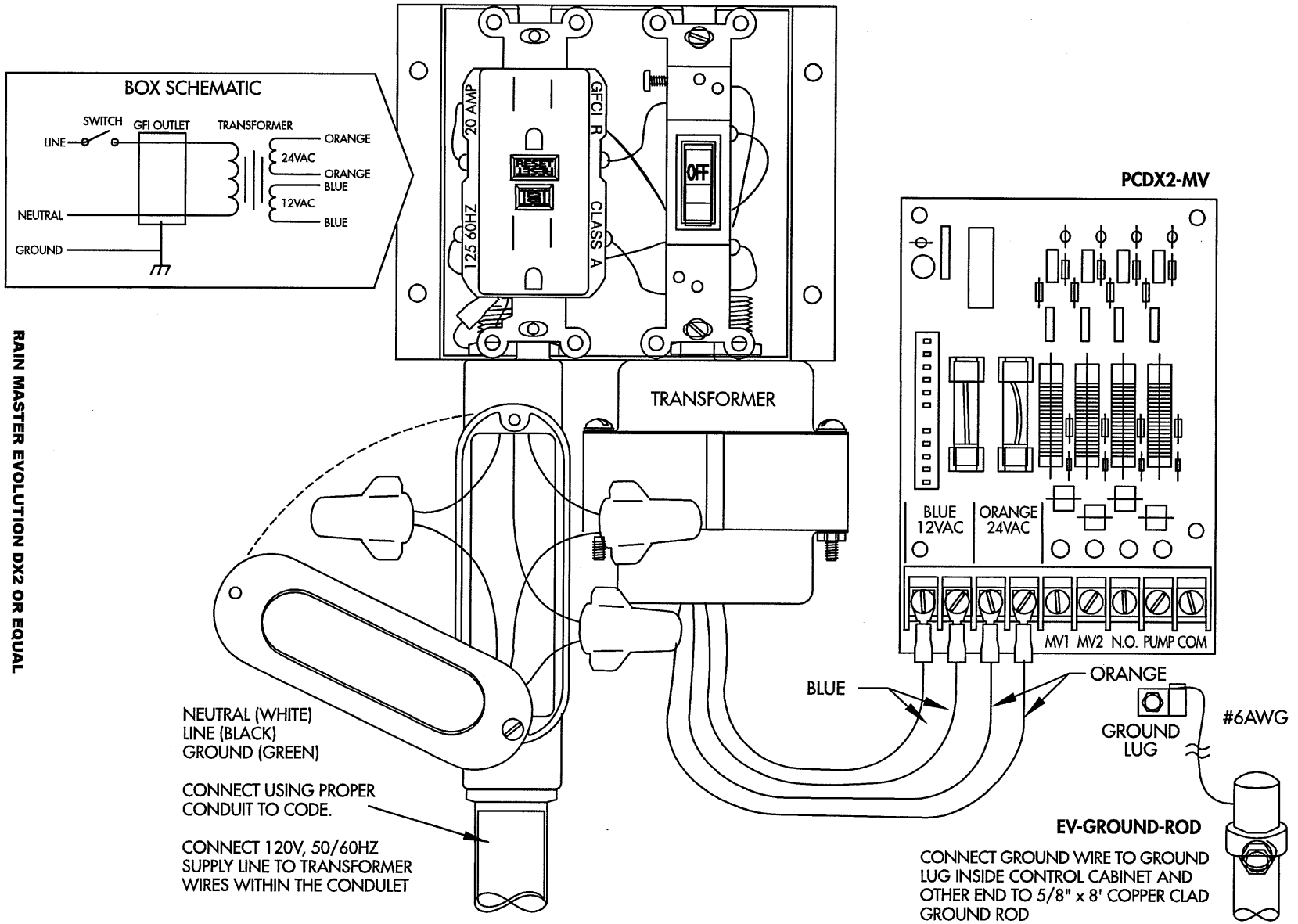

RAIN MASTER EVOLUTION DX2 OR EQUAL

RAIN MASTER IRRIGATION SYSTEMS • **OR EQUAL**

DATE : JUNE 30, 2006

DWG. 8F-4

APPROVED BY:

IRRIAGTION
FLOW SENSOR INSTALLATION

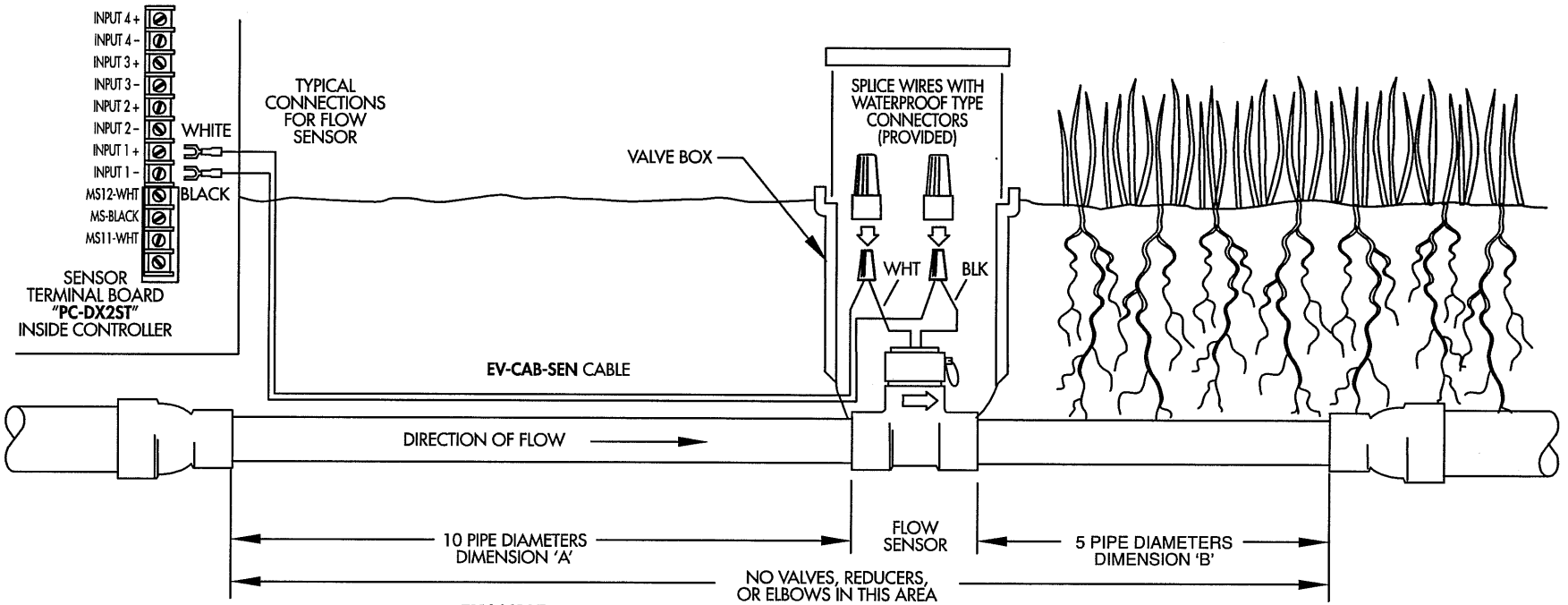

EXAMPLE:

FOR 3" FLOW SENSOR, DIMENSION 'A' MINIMUM 30"
DIMENSION 'B' MINIMUM 15"

Upon completion of the physical installation of the flow sensor, complete the wiring connection from the flow sensor to the DX2 controller by following the procedure below.

1. **TURN THE POWER OFF AT THE CONTROLLER**
2. At the Flow Sensor:
   Connect the **BLACK** wire of the Flow Sensor to the **BLACK** wire of the "**EV-CAB-SEN**", sensor cable.
   Connect the **WHITE** wire of the Flow Sensor to the **WHITE** wire of the "**EV-CAB-SEN**", sensor cable.
   *Use the weatherproof connectors provided with the Flow Sensor to make the connection.
3. At the controller:
   Connect **BLACK** wire of "**EV-CAB-SEN**" to "**INPUT 1–**" of the SENSOR TERMINAL BOARD (**PC-DX2ST**).
   Connect **WHITE** wire of "**EV-CAB-SEN**" to "**INPUT 1+**" of the SENSOR TERMINAL BOARD (**PC-DX2ST**).
4. Turn **POWER ON** at the Controller.
5. Set the Rain Master "K" and "OFFSET" values for the Flow Sensor at the controller based on the type and size of the Flow Sensor installed.

REFER TO THE TABLE PROVIDED WITH THE FLOW SENSOR FOR CORRECT "K" AND "OFFSET" FOR YOUR APPLICATION.

RAIN MASTER EVOLUTION DX2- OR EQUAL

DATE : JUNE 30, 2006

DWG. 8F-5

APPROVED BY:

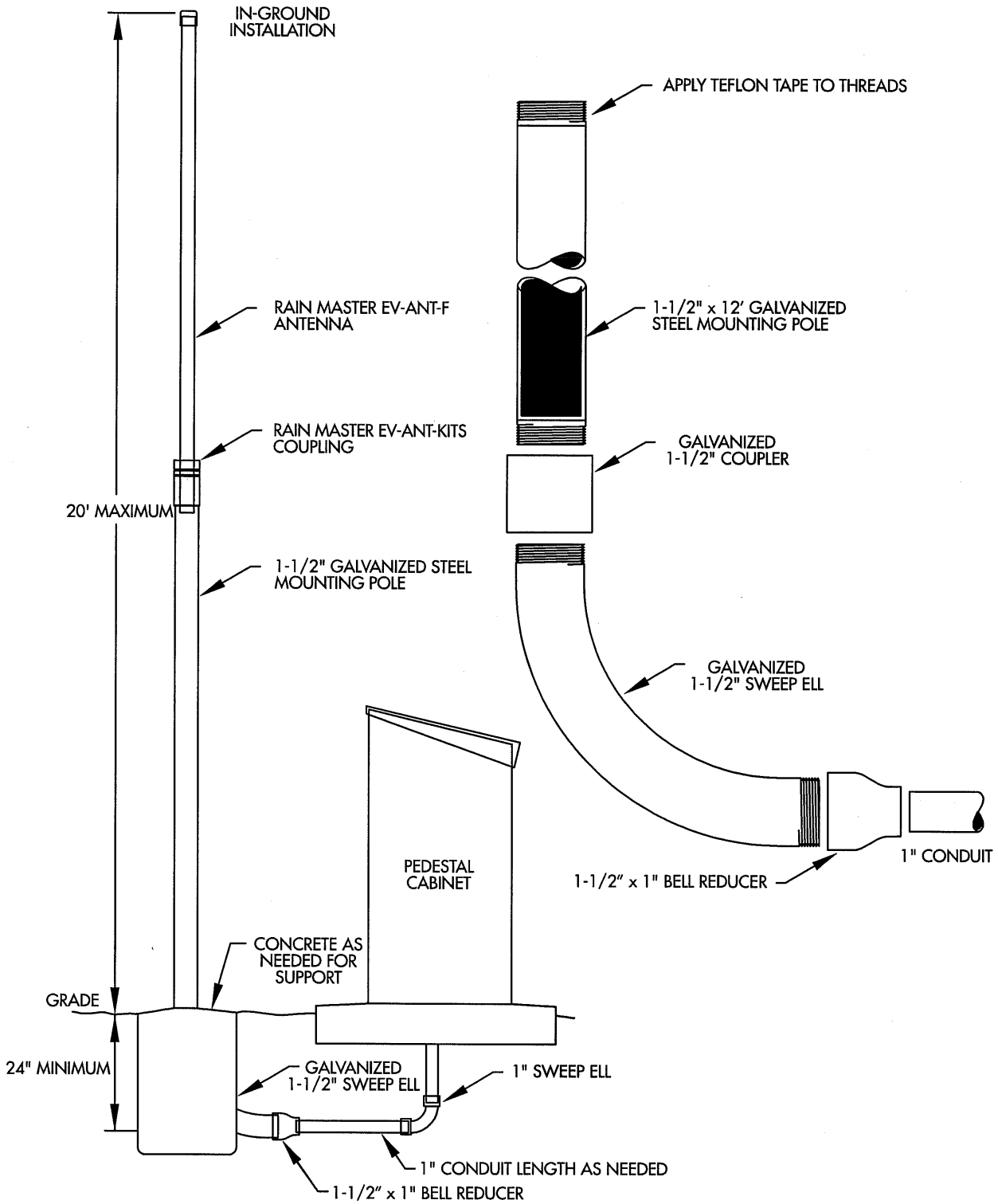

USE RAIN MASTER EVOLUTION DX2 OR EQUAL

IRRIGATION CONTROL ANTENNA INSTALLATION	APPROVED BY:	
	DATE : JUNE 30, 2006	DWG. **8F-6**

2006 STANDARD DETAILS

SPACING 'A'	SPACING 'B'	No. OF PLANTS/SQ. FOOT
6" O.C	5.2"	4.60
8" O.C	6.9"	2.60
9" O.C	7.8"	1.78
10" O.C	8.7"	1.66
12" O.C	10.4"	1.15
15" O.C	13.0"	0.74
18" O.C	15.6"	0.51
24" O.C	20.8"	0.29
30" O.C	26.0"	0.19
36" O.C	30.0"	0.12

SEE GROUNDCOVER PLANT KEY FOR MAXIMUM TRIANGULAR SPACING "A". THIS CHART IS TO BE USED TO DETERMINE NUMBER OF GROUNCOVER PLANTS REQUIERED IN A GIVEN AREA.

PLANT SPACING CHART

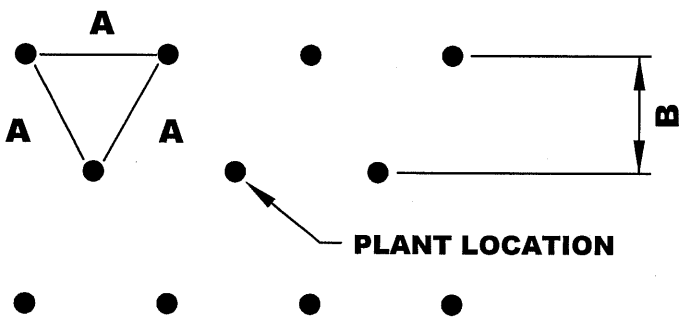

FOR USE WHEN PLANTS ARE SPACED EQUIDISTANT FROM EACH OTHERS AS IN ALL GROUNDCOVER PLANTINGS AND MASSED SHRUB PLANTINGS.

GROUNDCOVER

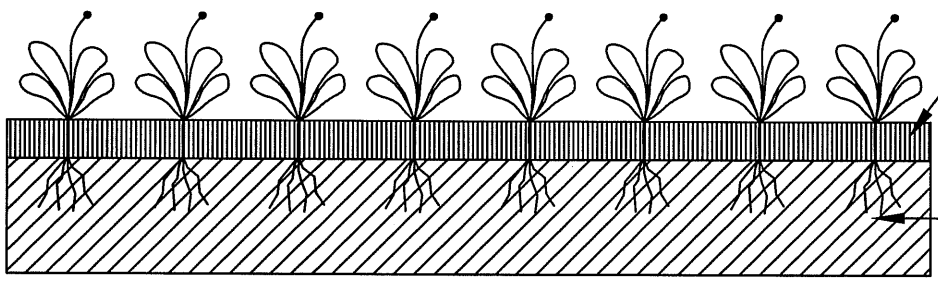

NO SCALE

GROUND COVER PLANTING	APPROVED BY:	
	DATE : JUNE 30, 2006	DWG. 9F

2006 STANDARD DETAILS

4' X 5' TREE WELL

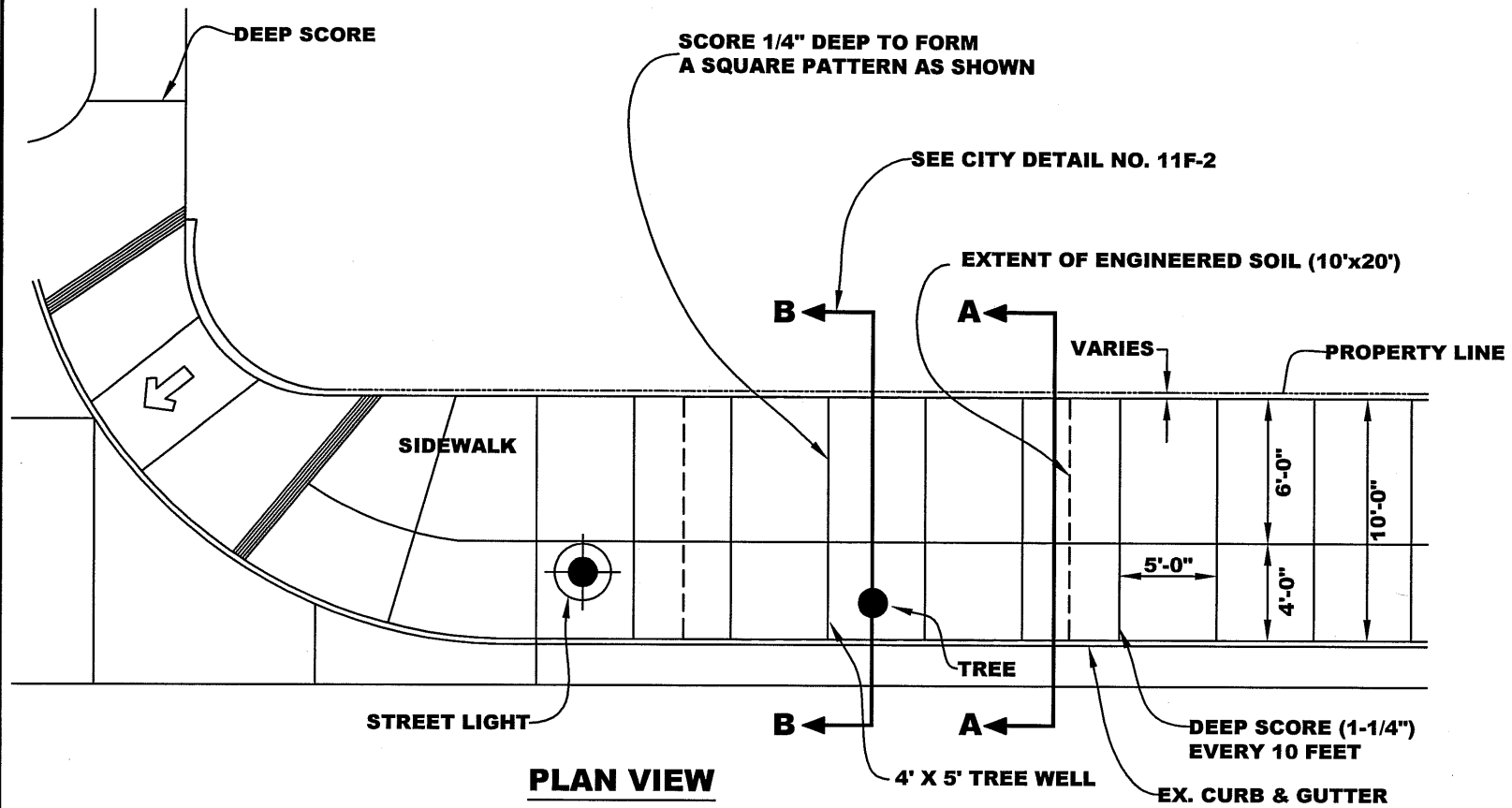

PLAN VIEW

NOTE: SEE ST1.0 FOR STREET LIGHT DETAIL
AND C3.0 FOR STREET LIGHT STATIONING

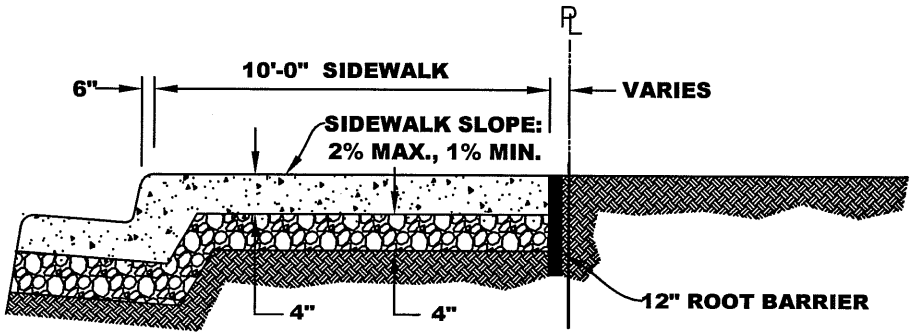

SECTION A-A

DATE : JUNE 30, 2006

DWG. 12F-1

APPROVED BY:

2006 STANDARD DETAILS

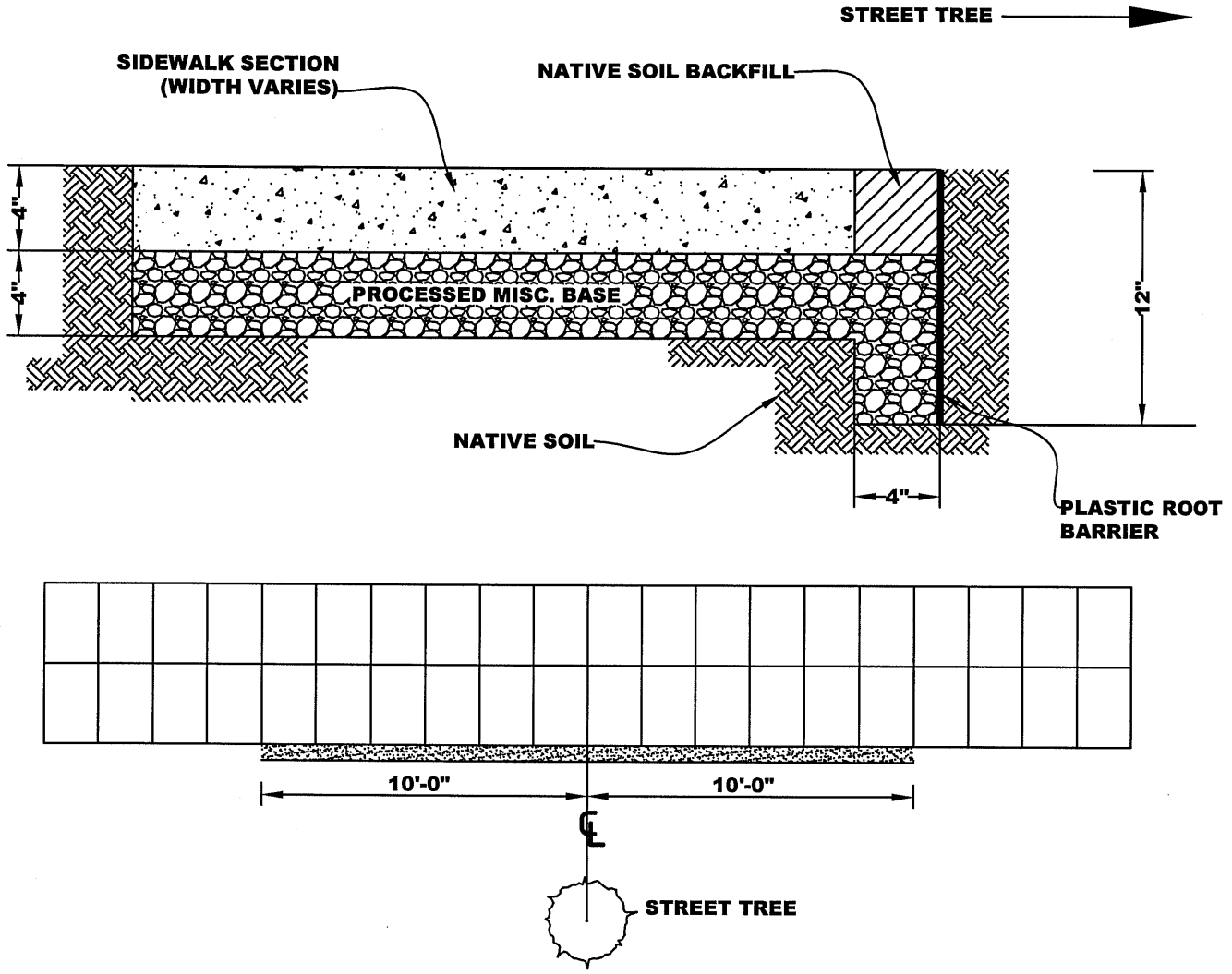

1. PLASTIC ROOT BARRIER SHALL BE MINIMUM 40 MIL THICK HIGH DENSITY POLYETHYLENE PLASTIC SHEETING TWELVE (12) INCHES WIDE.
2. THE PLASTIC ROOT BARRIER SHALL BE INSTALLED FOUR (4) INCHES FROM THE CONCRETE EDGE ON THE TREE SIDE OF THE ROOT BARRIER TRENCH.
3. THE PLASTIC ROOT BARRIER SHALL BE A CONTINUOUS SHEET ITS ENTIRE INSTALLED LENGTH.
4. THE PLASTIC ROOT BARRIER SHALL BE INSTALLED TO A MINIMUM LENGTH OF TEN FEET EITHER SIDE OF THE CENTER LINE OF THE STREET TREE.
5. THE PLASTIC ROOT BARRIER SHALL EXTEND TO THE SOIL SURFACE. THE TOP EDGE OF ROOT BARRIER SHOULD BE AT GRADE AND VISIBLE AFTER INSTALLATION.
6. PROCESSED MISC. BASE SHALL BE INSTALLED IN BOTTOM OF ROOT BARRIER TRENCH UP TO BASE OF SIDEWALK. BASE ROCK SHALL BE COMPACTED TO 95% PROCTOR DENSITY.
7. NATIVE SOIL SHALL FILL TOP FOUR (4) INCHES OF ROOT BARRIER TRENCH. THIS SOIL DOES NOT REQUIRE COMPACTION.
8. IT IS IMPERATIVE THAT BASE ROCK IN ROOT BARRIER TRENCH BE COMPACTED. IF MATERIAL IN ROOT BARRIER TRENCH IS NOT COMPACTED, ROOTS WILL GROW INTO THIS AREA AND TRAVEL IN INTERFACES BETWEEN BASE OF CONCRETE AND BASE ROCK DEFEATING THE FUNCTION OF ROOT BARRIER INSTALLATION.

ROOT CONTROL BARRIER INSTALLATION AT SIDEWALK	APPROVED BY:	
	DATE : JUNE 30, 2006	13F

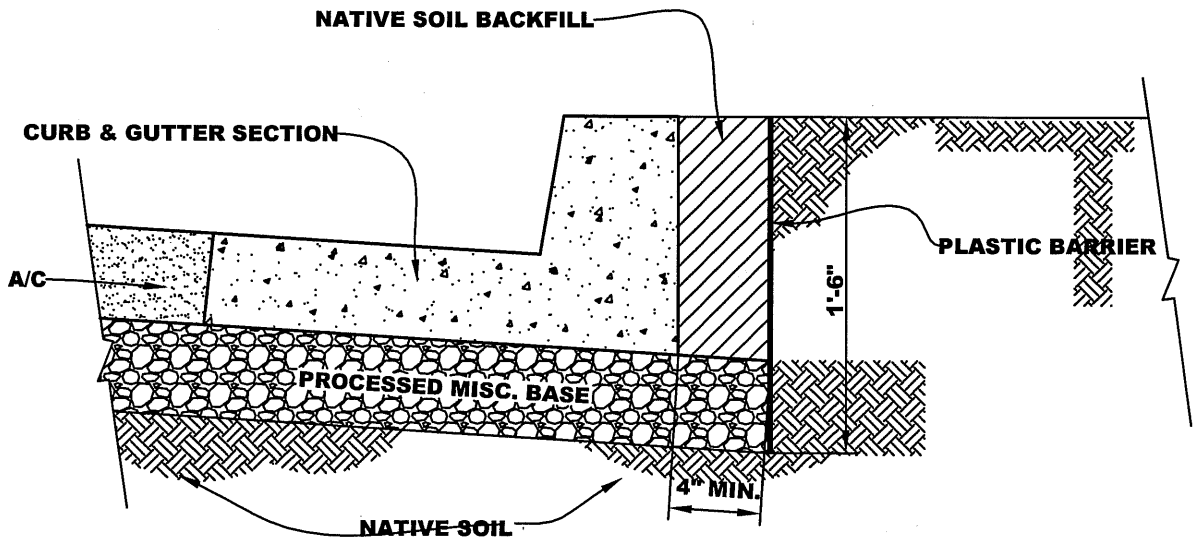

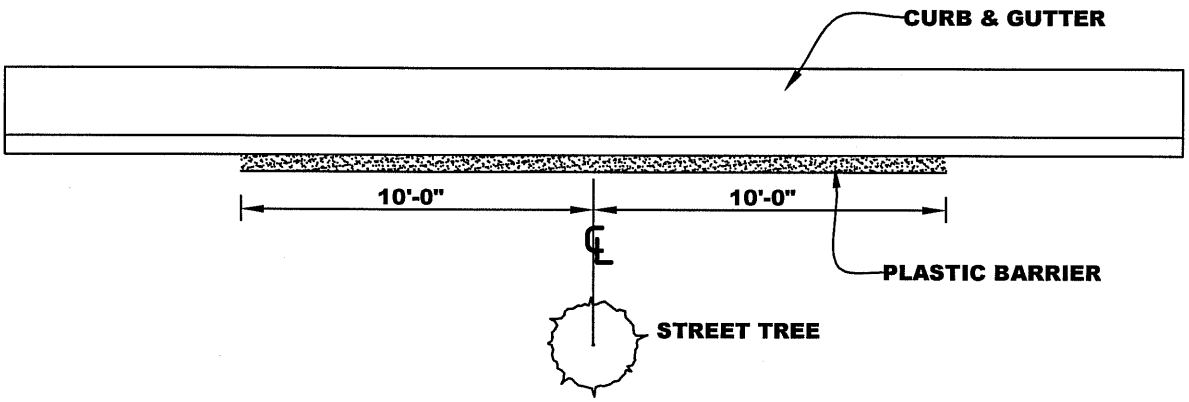

1. PLASTIC ROOT BARRIER SHALL BE MINIMUM 40 MIL THICK HIGH DENSITY POLYETHYLENE PLASTIC SHEETING EIGHTEEN (18) INCHES WIDE.
2. THE PLASTIC ROOT BARRIER SHALL BE INSTALLED FOUR (4) INCHES FROM THE CONCRETE EDGE ON THE TREE SIDE OF THE ROOT BARRIER TRENCH.
3. THE PLASTIC ROOT BARRIER SHALL BE A CONTINUOUS SHEET ITS ENTIRE INSTALLED LENGTH.
4. THE PLASTIC ROOT BARRIER SHALL BE INSTALLED TO A MINIMUM LENGTH OF TEN FEET EITHER SIDE OF THE CENTER LINE OF THE STREET TREE.
5. THE PLASTIC ROOT BARRIER SHALL EXTEND TO THE SOIL SURFACE. THE TOP EDGE OF ROOT BARRIER SHOULD BE AT GRADE AND VISIBLE AFTER INSTALLATION.
6. PROCESSED MISC. BASE SHALL BE INSTALLED IN BOTTOM OF ROOT BARRIER TRENCH UP TO BASE OF SIDEWALK. BASE ROCK SHALL BE COMPACTED TO 95% PROCTOR DENSITY.
7. NATIVE SOIL SHALL FILL TOP TWELVE (12) INCHES OF ROOT BARRIER TRENCH. THIS SOIL DOES NOT REQUIRE COMPACTION.
8. IT IS IMPERATIVE THAT BASE ROCK IN ROOT BARRIER TRENCH BE COMPACTED. IF MATERIAL IN ROOT BARRIER TRENCH IS NOT COMPACTED, ROOTS WILL GROW INTO THIS AREA AND TRAVEL IN INTERFACES BETWEEN BASE OF CONCRETE AND BASE ROCK DEFEATING THE FUNCTION OF ROOT BARRIER INSTALLATION.

ROOT CONTROL BARRIER INSTALLATION AT CURB	APPROVED BY:	
	DATE : JUNE 30, 2000	14F

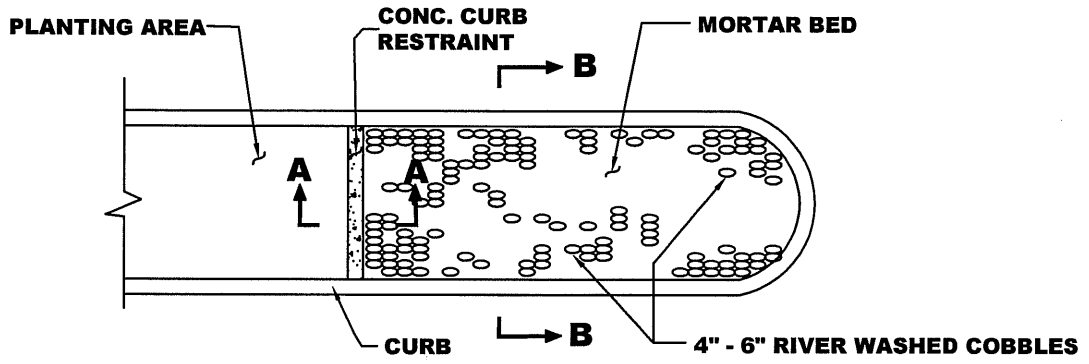

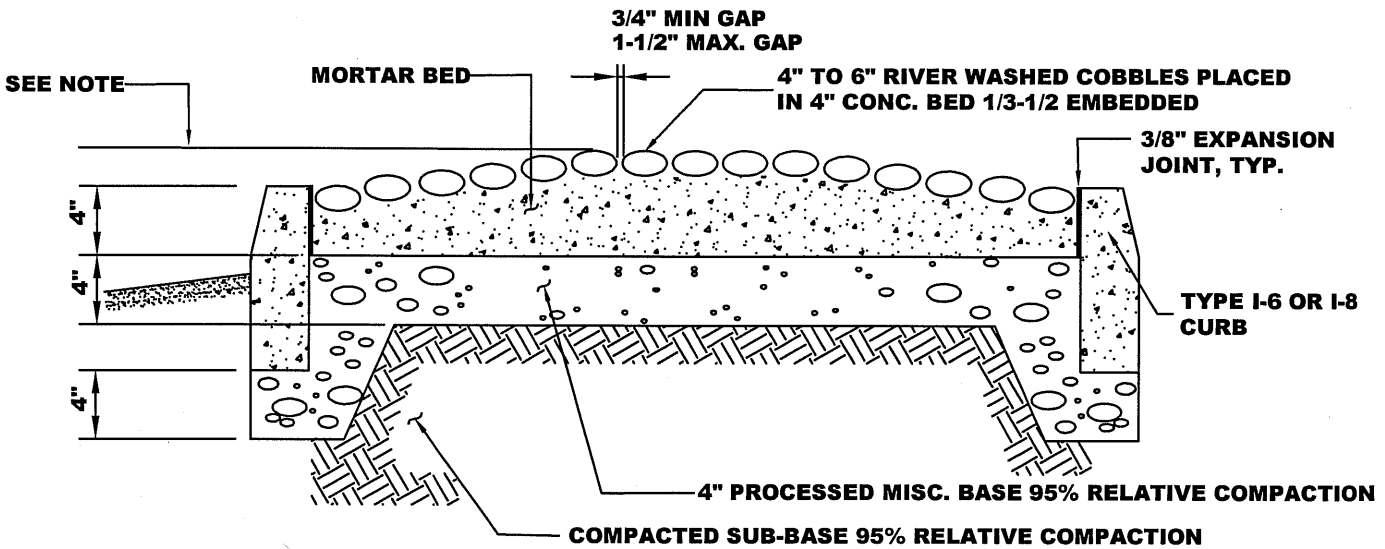

SECTION B - B

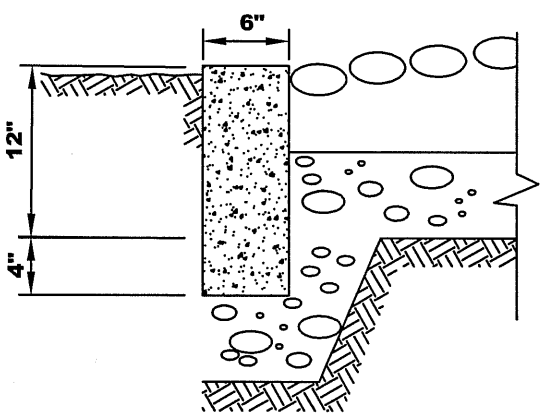

SECTION A - A

NOTE:

2" MIN. CROWN ON 8' WIDE MEDIAN, INCREASING PROPORTIONATELY TO 4" CROWN ON 20' WIDE MEDIAN.

MEDIAN COBBLESTONE PAVING	APPROVED BY:	
	DATE : JUNE 30, 2006	DWG. 15F

2006 STANDARD DETAILS

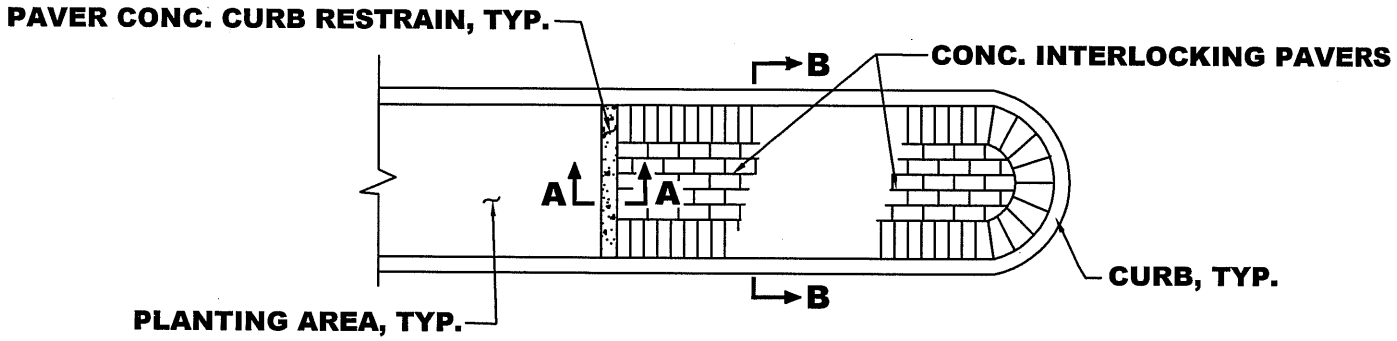

MEDIAN PAVING PATTERN, TYP.

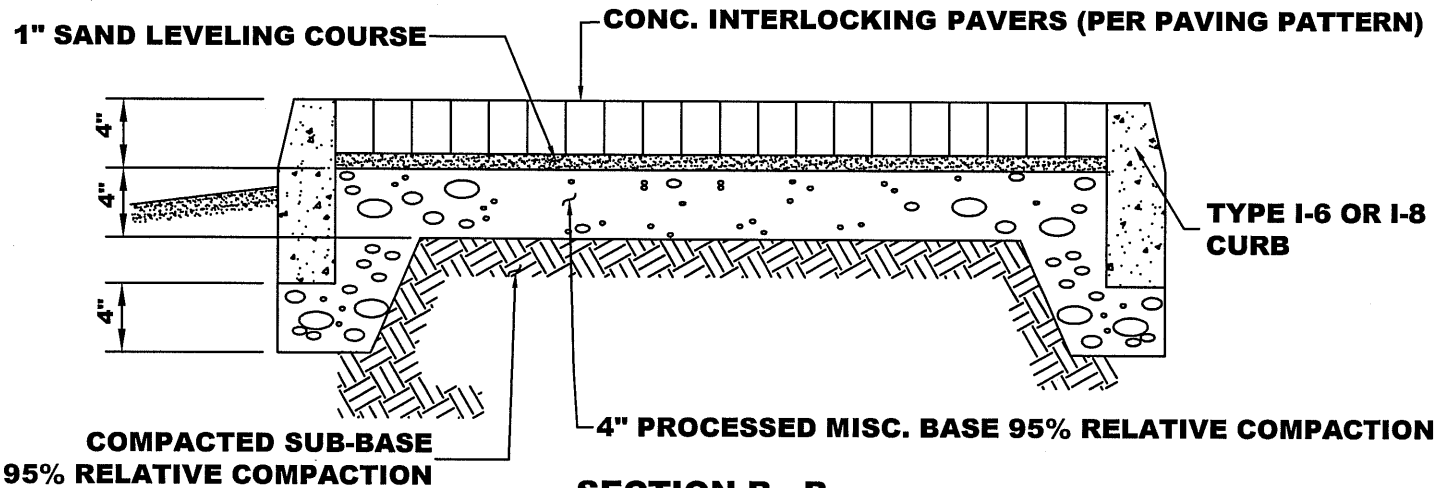

SECTION B - B

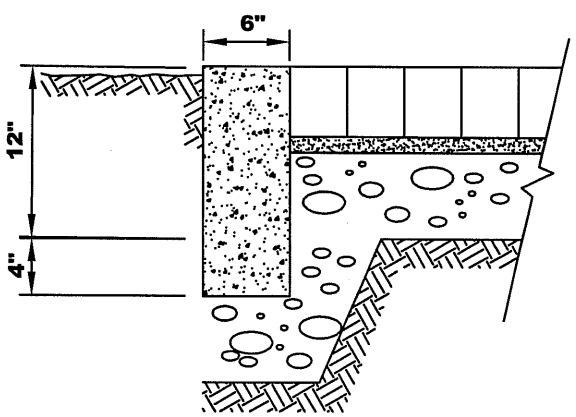

SECTION A - A

NOTES:

1. CONCRETE INTERLOCKING PAVERS SHALL BE "ANTIQUE COBBLE" INTERLOCKING PAVERS BY PACIFIC INTERLOCK PAVINGSTONE, OR EQUAL.

2. PAVERS SHALL BE 5.1" X 7.6" X 2 3/8" THICK.

MEDIAN ARCHITECTURAL PAVERS	APPROVED BY:	
	DATE : JUN 30, 2006	DWG. 16F-1

2006 STANDARD DETAILS

[PROJECT TITLE]

A PROJECT OF

DEPARTMENTS OF PUBLIC WORKS AND XXX

CITY OF SUNNYVALE
City Council & Manager

XXXX, Mayor
XXXX
XXXX
XXXX

XXXX, Vice-Mayor
XXXX
XXXX
XXXX, City Manager

SCOPE OF WORK:
[DESCRIPTION XXXX]

Scheduled Completion: XXXX

For information: Call XXXX

SAMPLE TEXT - EXACT TEXT TO BE PROVIDED BY CITY

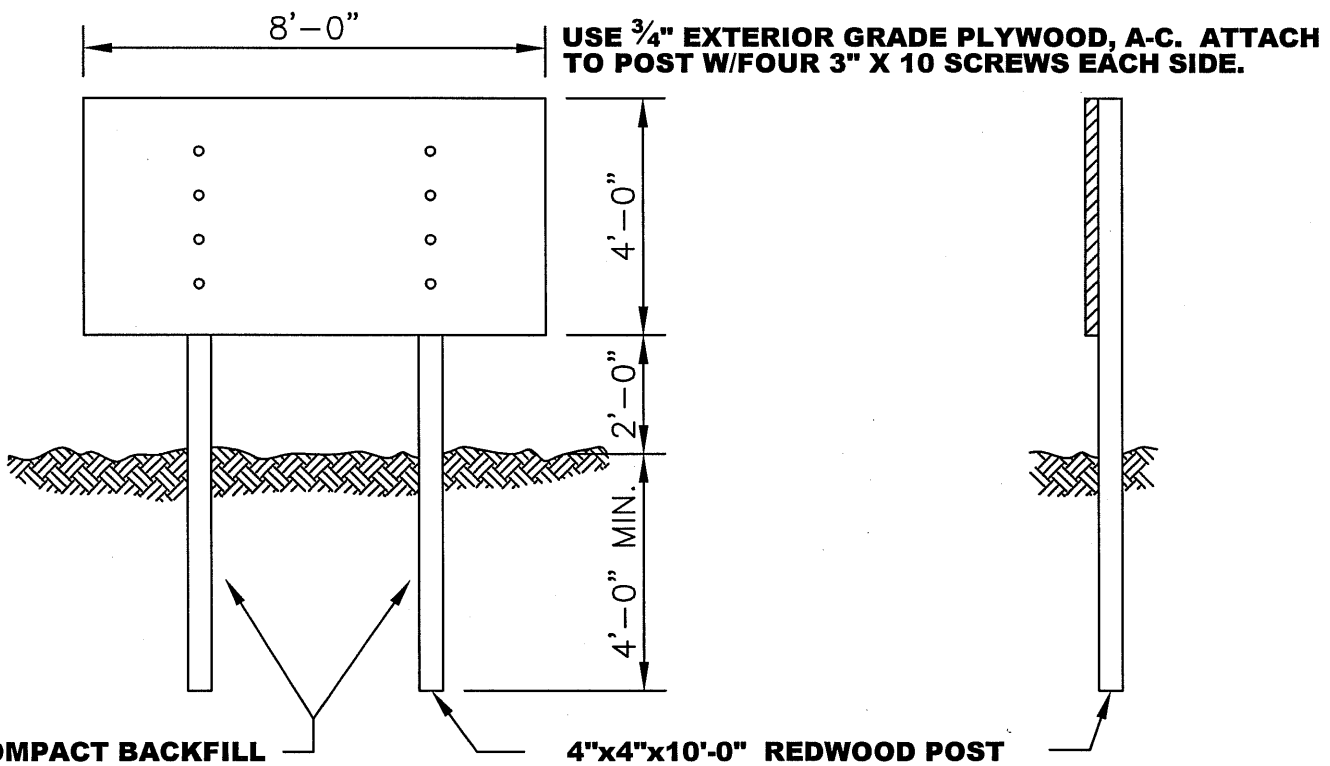

PROJECT INFORMATION SIGN

APPROVED BY:

DATE : JUN 30, 2006

DWG. 1G

2006 STANDARD DETAILS