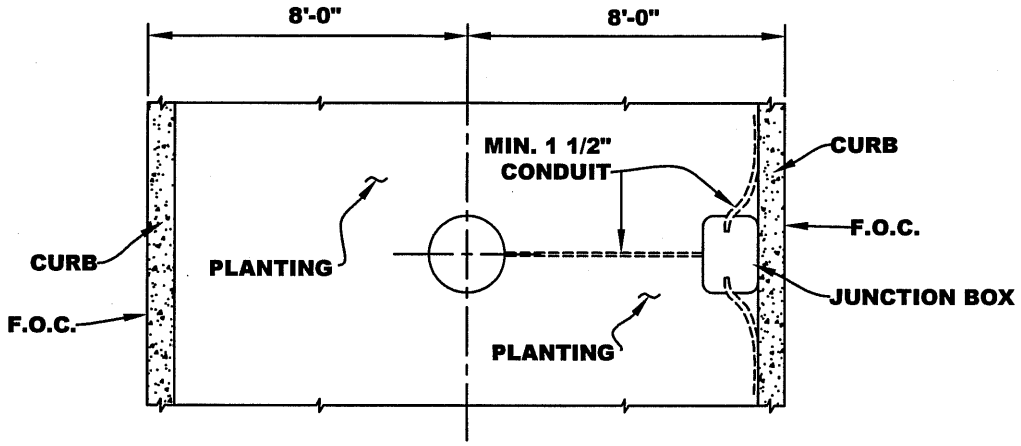

PLAN VIEW

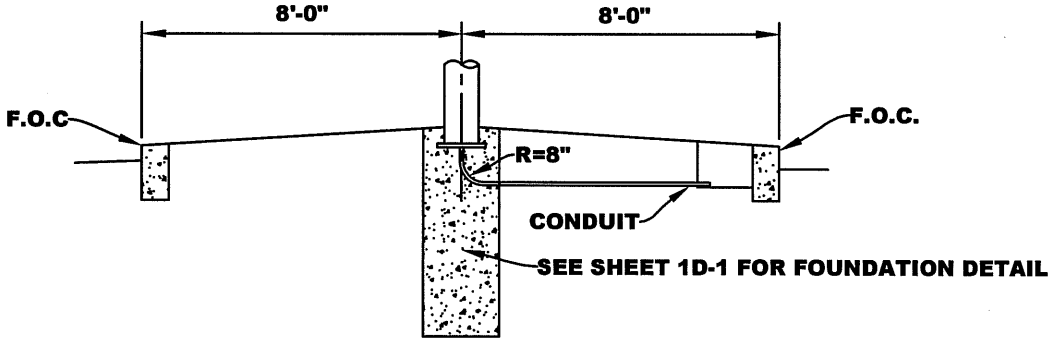

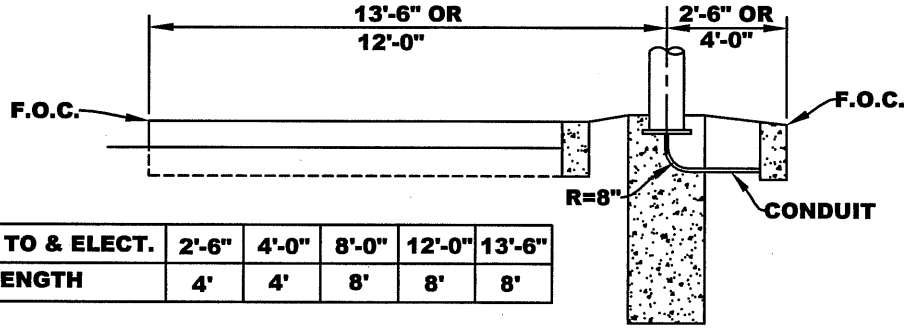

F.O.C. TO & ELECT.	2'-6"	4'-0"	8'-0"	12'-0"	13'-6"
ARM LENGTH	4'	4'	8'	8'	8'

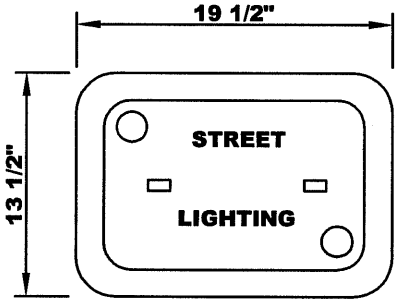

JUNCTION BOX
STAT OF CALIF. STD. #3 1/2

NO SCALE

SECTION

CONDUIT TO BE PLACED ON SUBGRADE BY TRENCHING OR PRIOR TO PLACEMENT OF AGGREGATE BASE MATERIAL FOR CURB & GUTTER

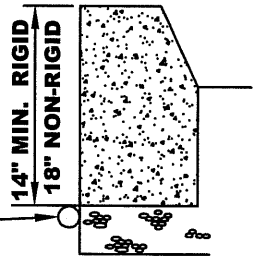

ELECTROLIER AND CONDUIT LOCATION IN MEDIAN ISLANDS

Marvin A. Rae
APPROVED BY:

DATE : JUNE 30, 2006
REVISED : APRIL, 2007

DWG. 5D

2006 STANDARD DETAILS