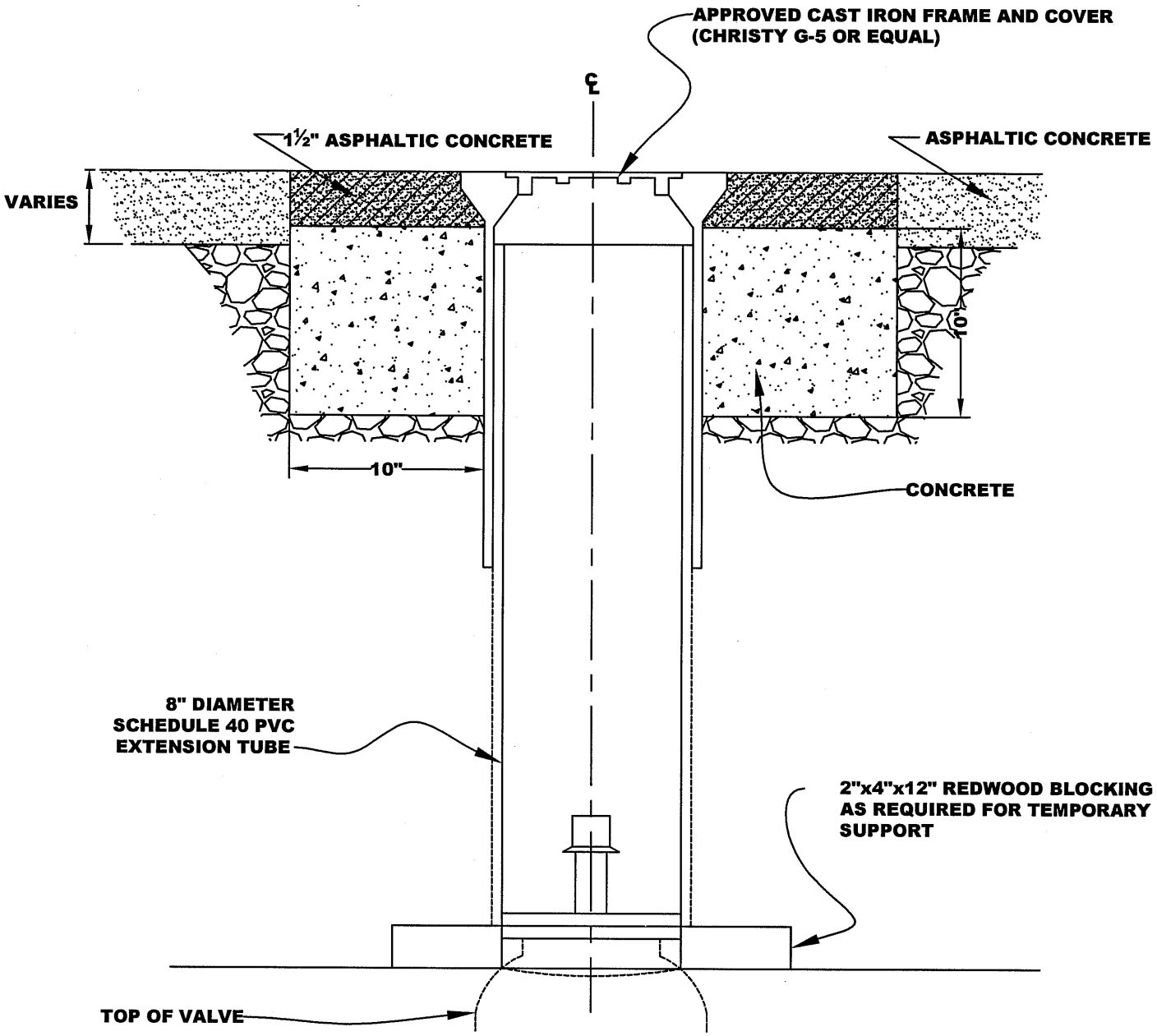

NOTES:

1. PLACE EXTENSION KEY INSIDE VALVE BOX EXTENSION WHEN VALVE KEY DEPTH IS GREATER THAN 10'-0"

2. LID CASTING FOR POTABLE WATER SYSTEM SHALL INCLUDE DESIGNATION "WATER". COVERS MUST BE COMPATIBLE CHRISTY BOX.

3. LID CASTING FOR RECYCLED WATER SYSTEM SHALL INCLUDE DESIGNATION "RECYCLED WATER"

WATER VALVE BOX INSTALLATION	APPROVED BY:	
	DATE : JUNE 30, 2006	DWG. 1B

NOTES:

1. EXTRA WIDE MONOLITHIC SIDEWALK
   X = 24" (FACE OF CURB TO CENTER OF HYDRANT) (Y DOES NOT APPLY) PROVIDED MIN CLEAR WIDTH BETWEEN BACK OF HYDRANT AND BACK OF WALK IS 4'-0". IF THIS MIN WIDTH CANNOT BE ACHIEVED, SEE NOTE 3.
2. NON MONOLITHIC SIDEWALK
   X = 24" (FACE OF CURB TO CENTER OF HYDRANT) (Y DOES NOT APPLY)
3. MONOLITHIC SIDEWALK
   Y = 12" (BACK OF SIDEWALK TO CENTER OF HYDRANT) (X DOES NOT APPLY)
4. NO SIDEWALK
   X = 6'-6" (FACE OF CURB TO CENTER OF HYDRANT) (Y DOES NOT APPLY)

NOTE:

LATERAL AND FIRE HYDRANT SHALL BE INSTALLED AND TRENCH BACKFILLED AND COMPACTED IN THIS AREA BEFORE CURB AND GUTTER ARE POURED. WRAP FITTINGS W/ VISQEEN IF NEAR THRUST BLOCK

CURB DETAIL AT FIRE HYDRANT LOCATIONS

FIRE HYDRANT ASSEMBLY	APPROVED BY:	
	DATE : JUNE 30, 2006	DWG. 2B

HYDRANT LOCATION INFORMATION

HYDRANT LOCATIONS

2' BEHIND 5' MONOLITHIC SIDEWALK.
2' BEHIND F.O.C. IN ALL OTHER INSTALLATIONS.

(3) HYDRANT REQUIREMENTS

CLOW/RICH NO. 75

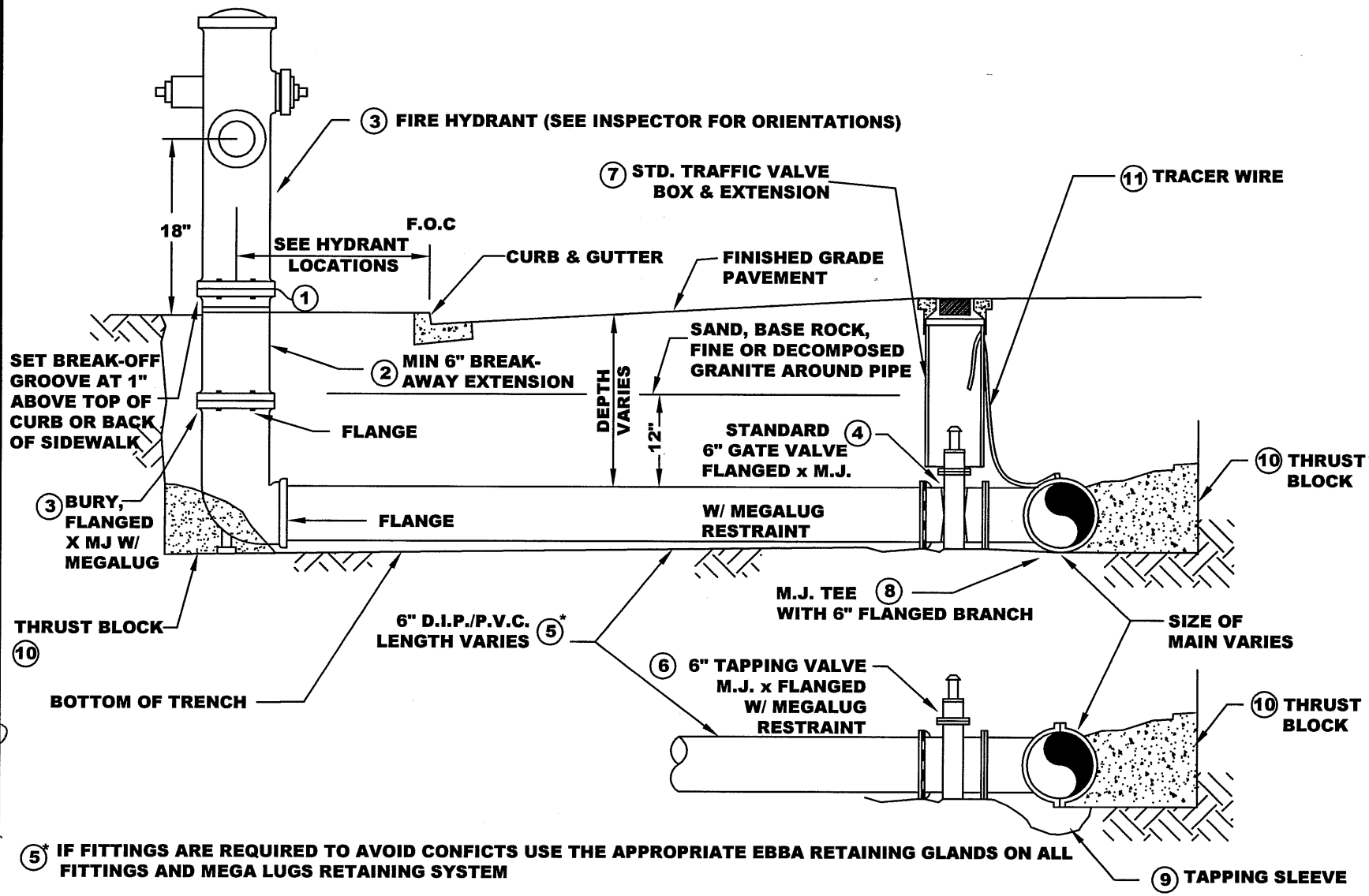

(5)* IF FITTINGS ARE REQUIRED TO AVOID CONFICTS USE THE APPROPRIATE EBBA RETAINING GLANDS ON ALL FITTINGS AND MEGA LUGS RETAINING SYSTEM

NOTE:

1. USE BREAK-OFF BOLTS FOR STANDARD F.H. INSTALLATION AT F.H. FLANGE TO EXTENSION CONNECTION ONLY.
2. IF BREAK-OFF VALVE REQUIRED PER PLANS DO NOT USE BREAK-OFF BOLTS.
3. INSTALL BOLTS UP; NUTS DOWN

DATE : JUNE 30, 2006

DWG. 2B-2

APPROVED BY:

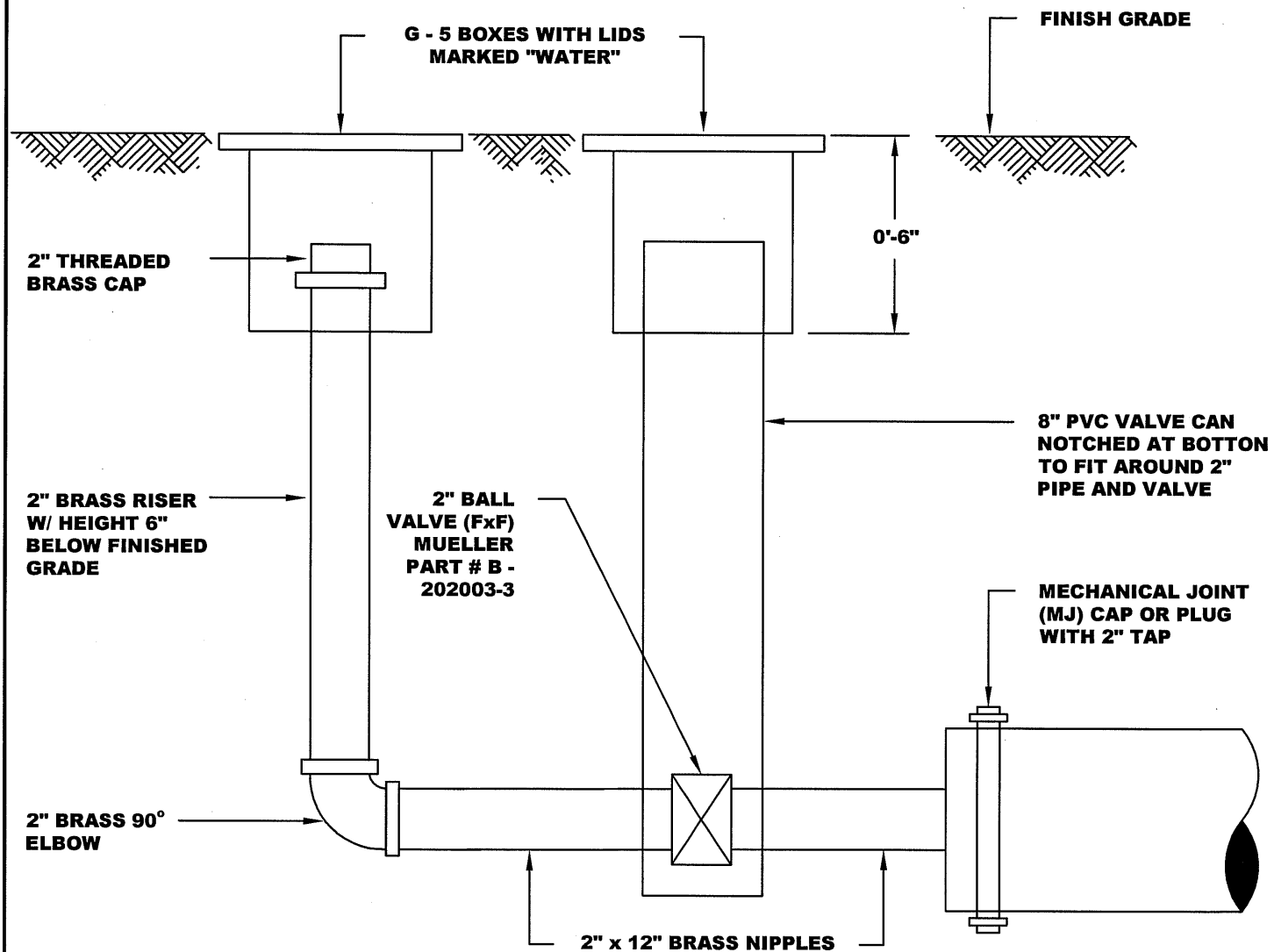

NOTES:

1. BLOW-OFF ASSEMBLY AND END OF WATER MAIN MUST HAVE A KICKER / THRUST BLOCK INSTALLED

STANDARD BLOW OFF	APPROVED BY:	
	DATE : JUNE 30, 2006	DWG. 3B

STANDARD AIR-RELIEF VALVES 1" & 2"

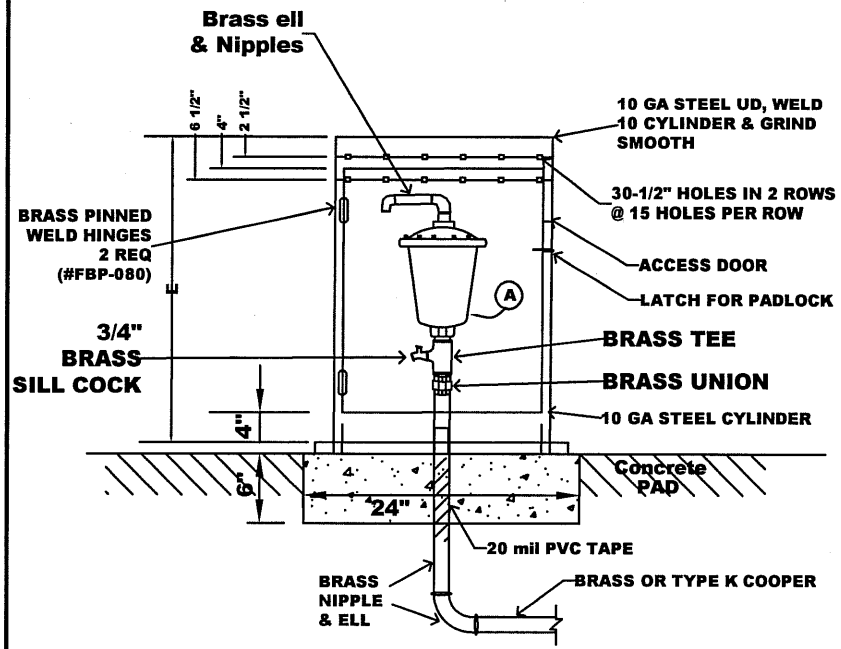

ELEVATION

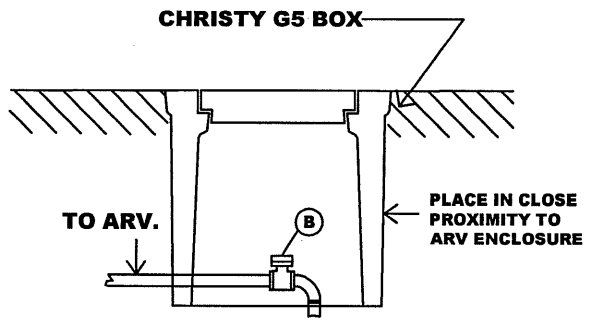

MATERIAL

THE TYPE "K" COPPER TUBING SHALL AT ALL POINTS BE RISING FROM THE CORPORATION STOP TO THE AIR & VACUUM RELIEF VALVE.

(A) CRISPIN UNIVERSAL AIR & VACUUM RELIEF VALVE

(B) MUELLER BALL VALVE / B202000 OR FORD EQUIV.

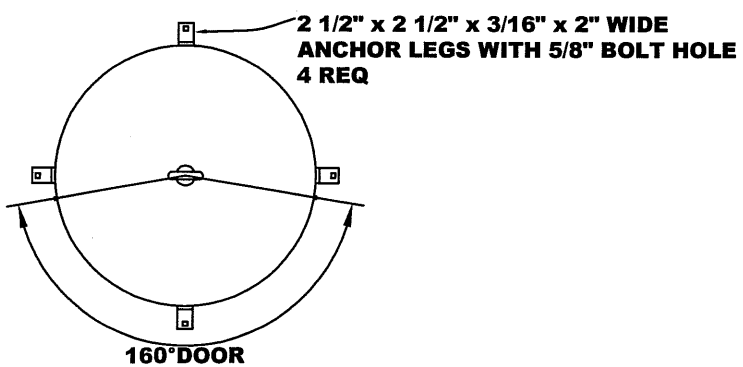

PLAN

NOTES:

1. CONNECTION TO WATER MAIN SHALL CONFORM TO STANDARD DETAILS AND ESPECIFICATIONS.
2. USE SAME DIAMETER SEAMLESS COPPER TUBING AS REQUIRED SIZE OF AIR & VACUUM RELIEF VALVE.
3. AIR RELIEF VALVE AND CURB STOP SHALL BE PLACED IN BOX SUCH THAT THE WALL OF THE BOX WILL NOT INTERFERE WITH THE INSTALLATION AND REMOVAL OF THE VALVES.

NOTES:

1. PIPELINE PRODUCTS PART #VC316D
2. POWDER COATED DARK GREEN
3. ANY DEVIATION FROM STANDARD DETAILS MUST BE APPROVED BY PUBLIC WORKS / FIELD SERVICES / SENIOR LEADER

SIZING FOR AIR VALVE COVER

VALVE SIZE	A (DIAMETER)	B (HEIGHT)	PART #
1" & 2"	18"	30"	VC-316

AUTOMATIC AIR & VACUUM VALVE

DATE : JUNE 30, 2006

DWG. 3B-1

APPROVED BY:

WATER SERVICE CONNECTION FOR METER SIZES 1" 1-1/2" AND 2"

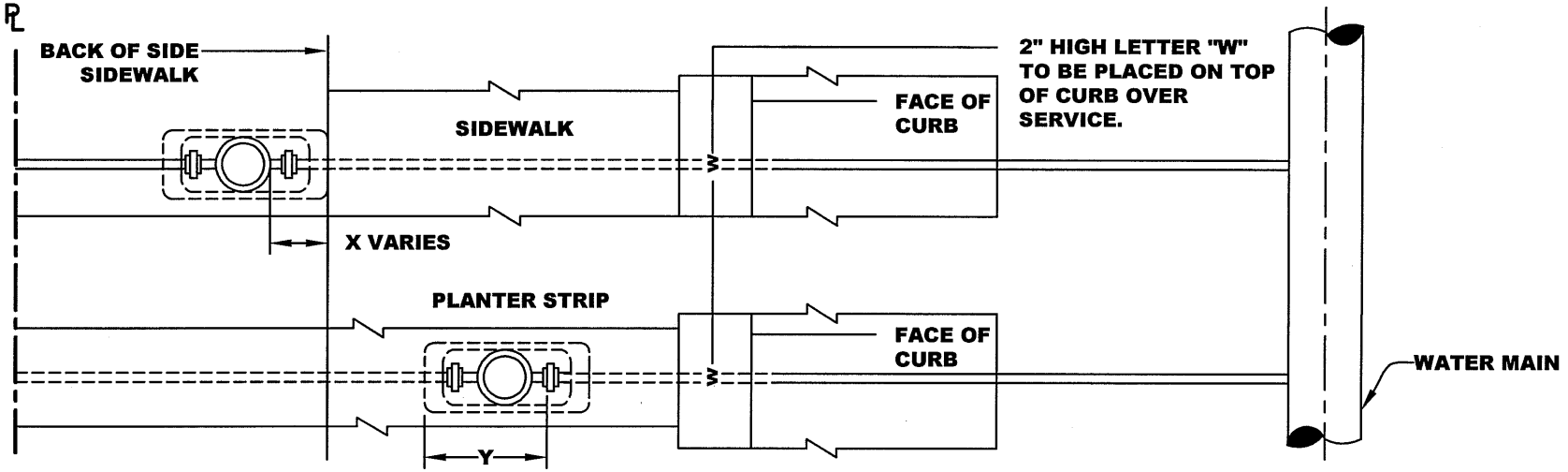

***NOTE:** ALL SERVICE CONNECTIONS LARGER THAN 1" TO CAST IRON OR DUCTILE IRON MAINS REQUIRE THE INSTALLATION OF DOUBLE STRAP BRONZE SADDLES WITH MUELLER THREAD. ALL SERVICE CONNECTIONS TO EXISTING ASBESTOS CEMENT PIPE REQUIRE DOUBLE STRAP BRONZE SADDLES.

FOR SITUATIONS WHERE THERE IS INSUFFICIENT ROOM BETWEEN BACK OF SIDEWALK AND PROPERTY LINE, INSTALL METER BOX IN SIDEWALK AS DIRECTED BY ENGINEER.

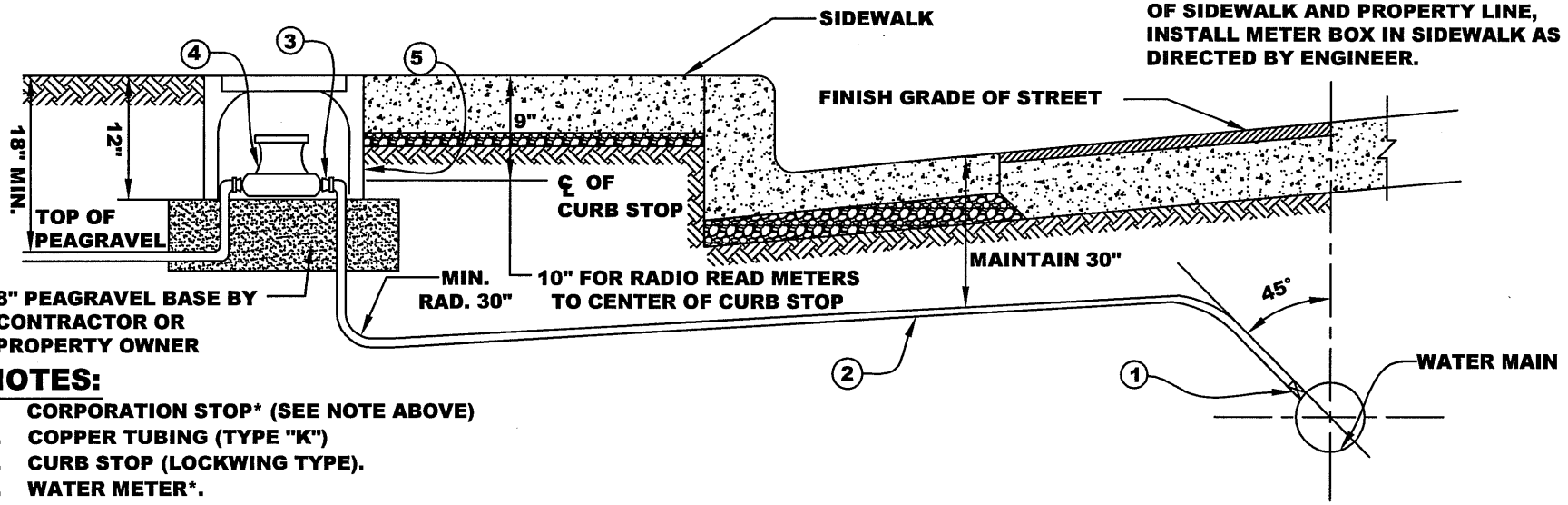

NOTES:

1. CORPORATION STOP* (SEE NOTE ABOVE)
2. COPPER TUBING (TYPE "K")
3. CURB STOP (LOCKWING TYPE).
4. WATER METER*.
5. METER BOX*.
6. EXCAVATE FOR METER BOX AND PLACE PEAGRAVEL BASE BEFORE CITY INSTALLATION OF METER BOX.
7. FOR MONOLITHIC OR NO SIDEWALK LOCATIONS USE DETAIL WITH "X" DIMENSION. FOR NON-MONOLITHIC SIDEWALK, USE DETAIL WITH "Y" DIMENSION.
8. CITY WILL PERFORM LIVE TAP AND WILL FURNISH AND INSTALL METER AND BOX UPON PAYMENT OF FEE.
9. NEW 1" TAP REQUIRED FOR ALL 1" METER UPGRADES. CONTACT FIELD SERVICES FOR EXISTING SERVICE LINE INFORMATION.

METER SIZE	-	-	1"	1-1/2"	2"
X *	-	-	7"	7"	9"
Y	-	-	17"	20"	26"
METER BOX EXCAV.					
SIZE (WxL) (in x in)	(18x24)	(18x24)	(20x30)	(20x30)	(24x36)

* WHERE NO SIDEWALK, MEASURE "X" FROM BACK OF CURB

DATE : JUNE 30, 2006

DWG. 4B

APPROVED BY:

2006 STANDARD DETAILS

METER BOX AND VAULT SPECIFICATIONS

1. Small meters (note 12B in standard specifications book)
   a. Armorcast 15-1/2" X 25" for 1" meters
   b. Armorcast 18" X 27-1/2" for 1-1/2" meters
   c. Armorcast 22" X 35" for 2" meters

2. Compound meters (note 12B in standard specifications book)
   a. 3" compound 4' X 6'
   b. 4" compound 4' X 6'
   c. 6" compound 4' X 6'

3. FM Meters
   a. 4" FMCT 4' X 6'
   b. 6" FMCT 4' X 6'
   c. 8" FMCT 4' X 6'
   d. 10" FMCT 5' X 6'

Size Meter	Meter Type	Meter Length
1"		10-3/4"
1-1/2"		13"
1-1/2"	Turbine with strainer	13"
2"		17"
2"	Turbine with strainer	17"
3"		24"
3"	Turbine with strainer	18"
4"		29"
4"	Turbine with strainer	21-1/2"
6"		36-1/2"
6"	Turbine with strainer	27"
8"	Turbine with strainer	30"
4" x 2"	MFM	33"
6" x 3"	MFM	45"
8" x 4"	MFM	53"

FIRE SERVICE LOOP WITH SEPERATE DOMESTIC SERVICE

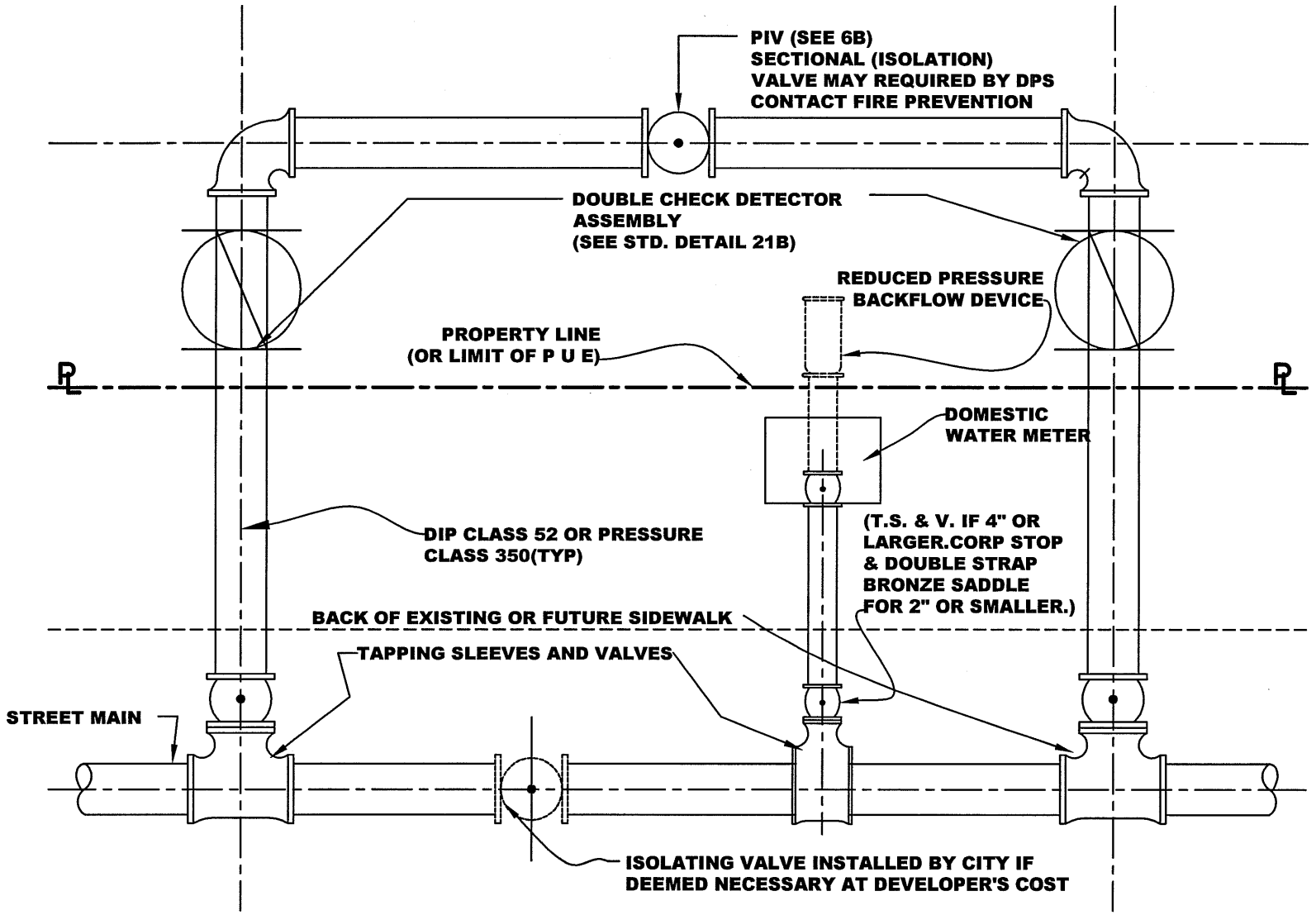

NOTE:

AN APPROVED BACKFLOW DEVICE REQUIRED ON THE FIRE LOOP AND ON THE DOMESTIC SYSTEM

DATE: JUNE 30, 2006

APPROVED BY:

5B

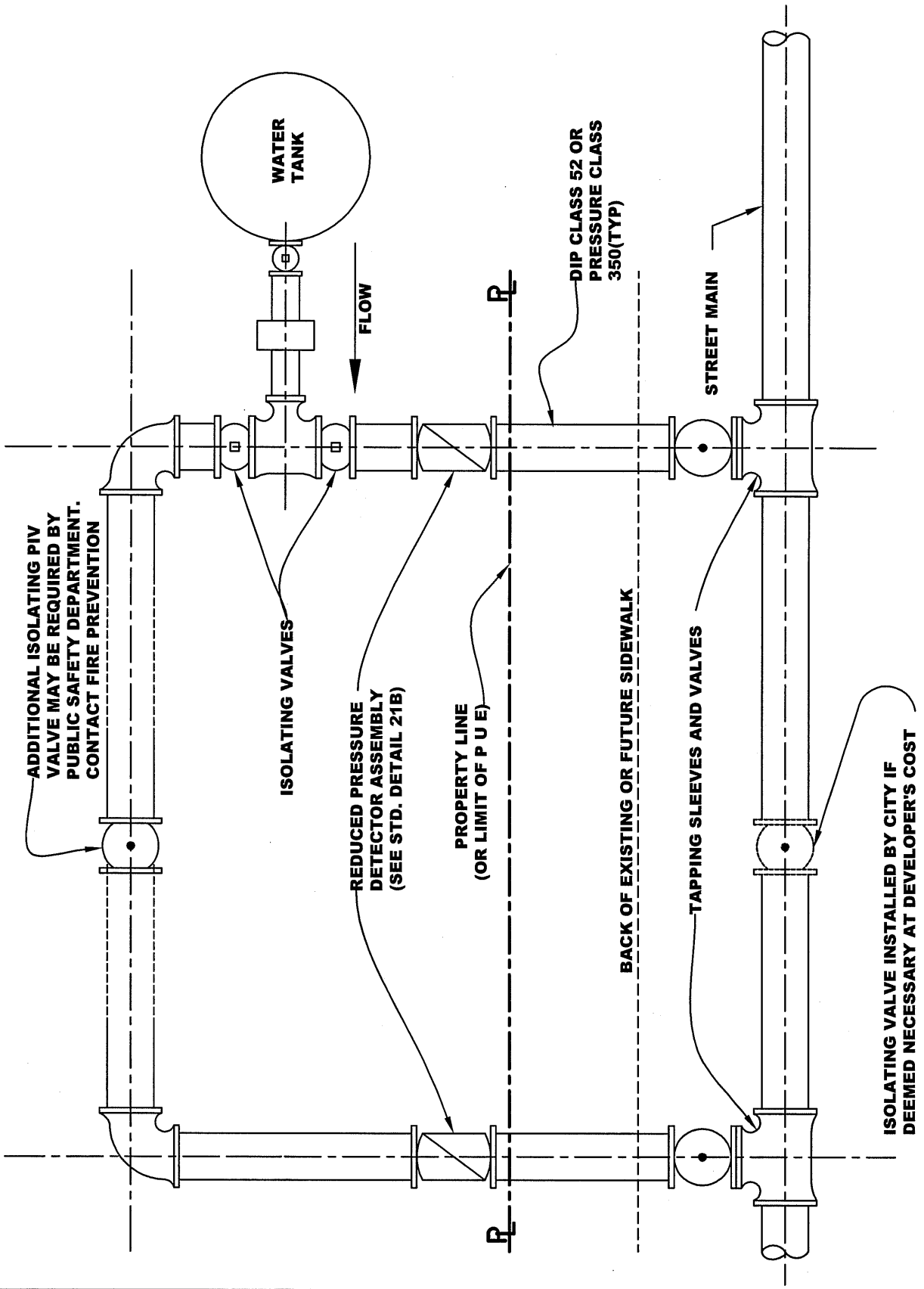

FIRE SERVICE LOOP WITH FIRE PUMP AND TANK

APPROVED BY:

DATE: JUNE 30, 2006

6B

FIRE AND DOMESTIC SERVICE FROM A SINGLE CONNECTION

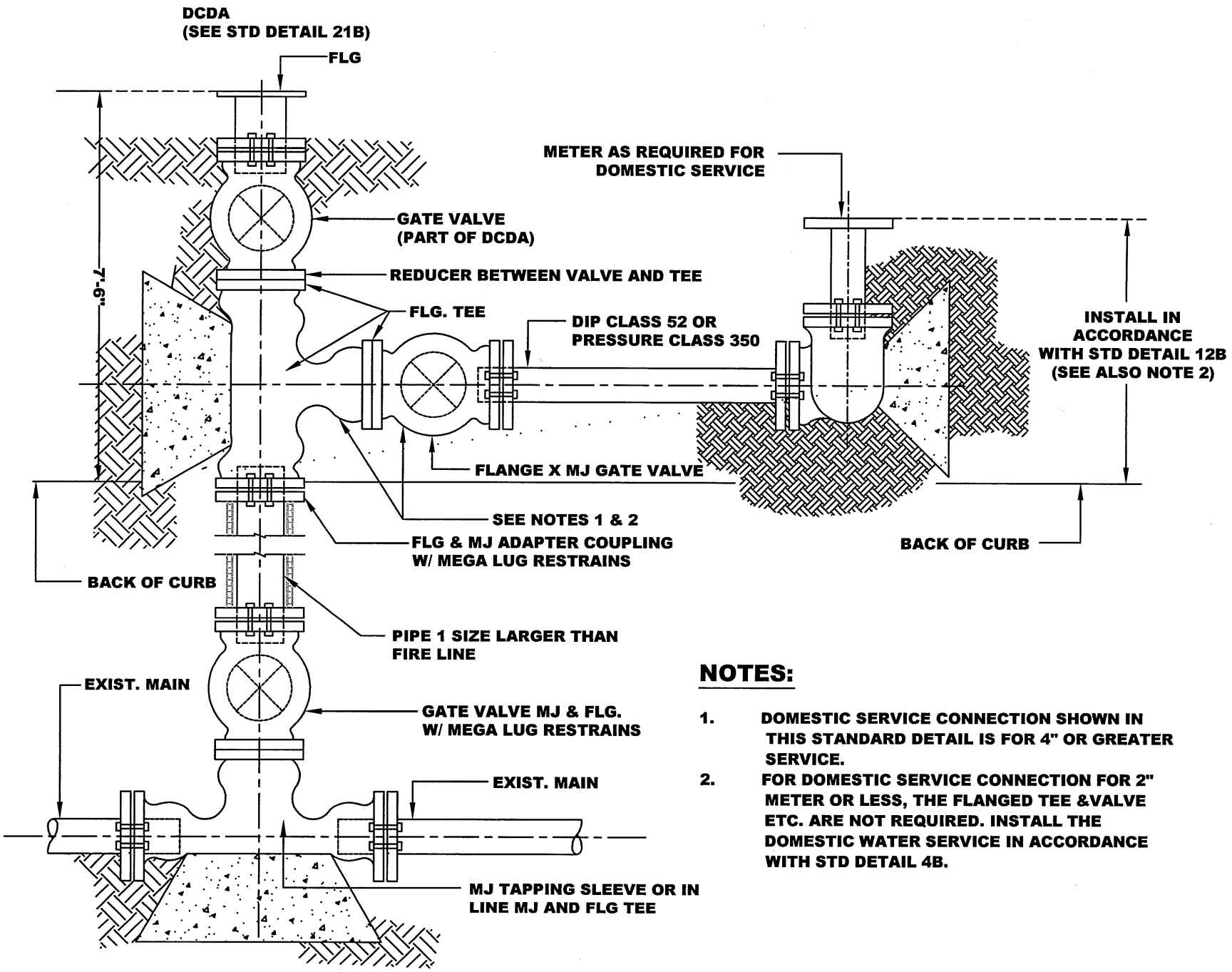

NOTES:

1. DOMESTIC SERVICE CONNECTION SHOWN IN THIS STANDARD DETAIL IS FOR 4" OR GREATER SERVICE.
2. FOR DOMESTIC SERVICE CONNECTION FOR 2" METER OR LESS, THE FLANGED TEE &VALVE ETC. ARE NOT REQUIRED. INSTALL THE DOMESTIC WATER SERVICE IN ACCORDANCE WITH STD DETAIL 4B.

(APPROVAL OF CITY ENGINEER REQUIRED)

DATE: JUNE 30, 2006

APPROVED BY:

8B

FIRE AND DOMESTIC COMBINED SERVICE LOOP SYSTEM

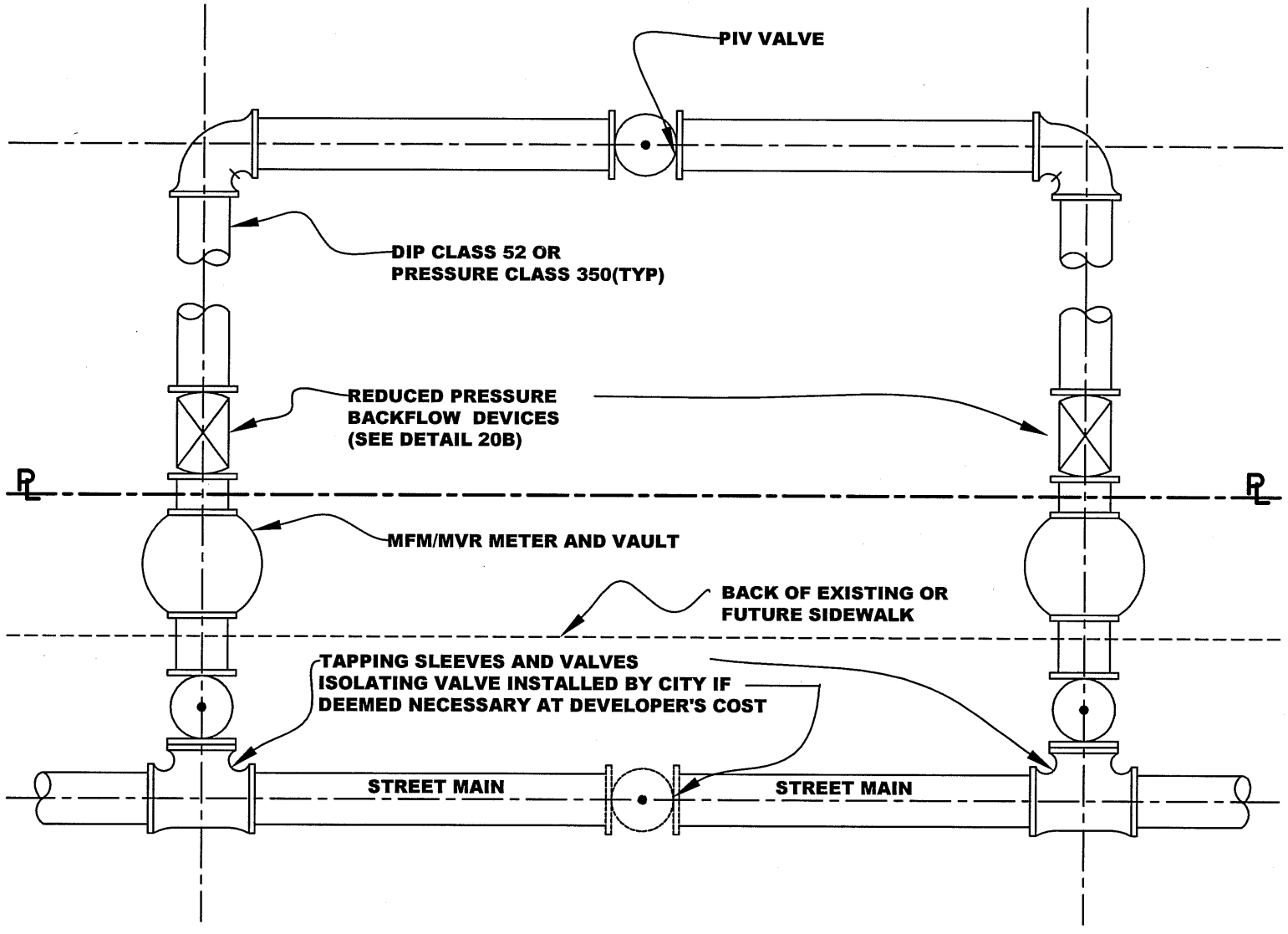

NOTES:

1. BACKFLOW DEVICE MUST BE SAME SIZE AS PIPE IN LOOPED SYSTEM.
2. MFM/MVR METER SHALL BE SAME SIZE AS LOOPED SYSTEM OR AS OTHERWISE APPROVED BY CITY ENGINEER.

DATE: JUNE 30, 2006

APPROVED BY:

10B

WATER SERVICE INSTALLATION
3" THROUGH 10" METERS

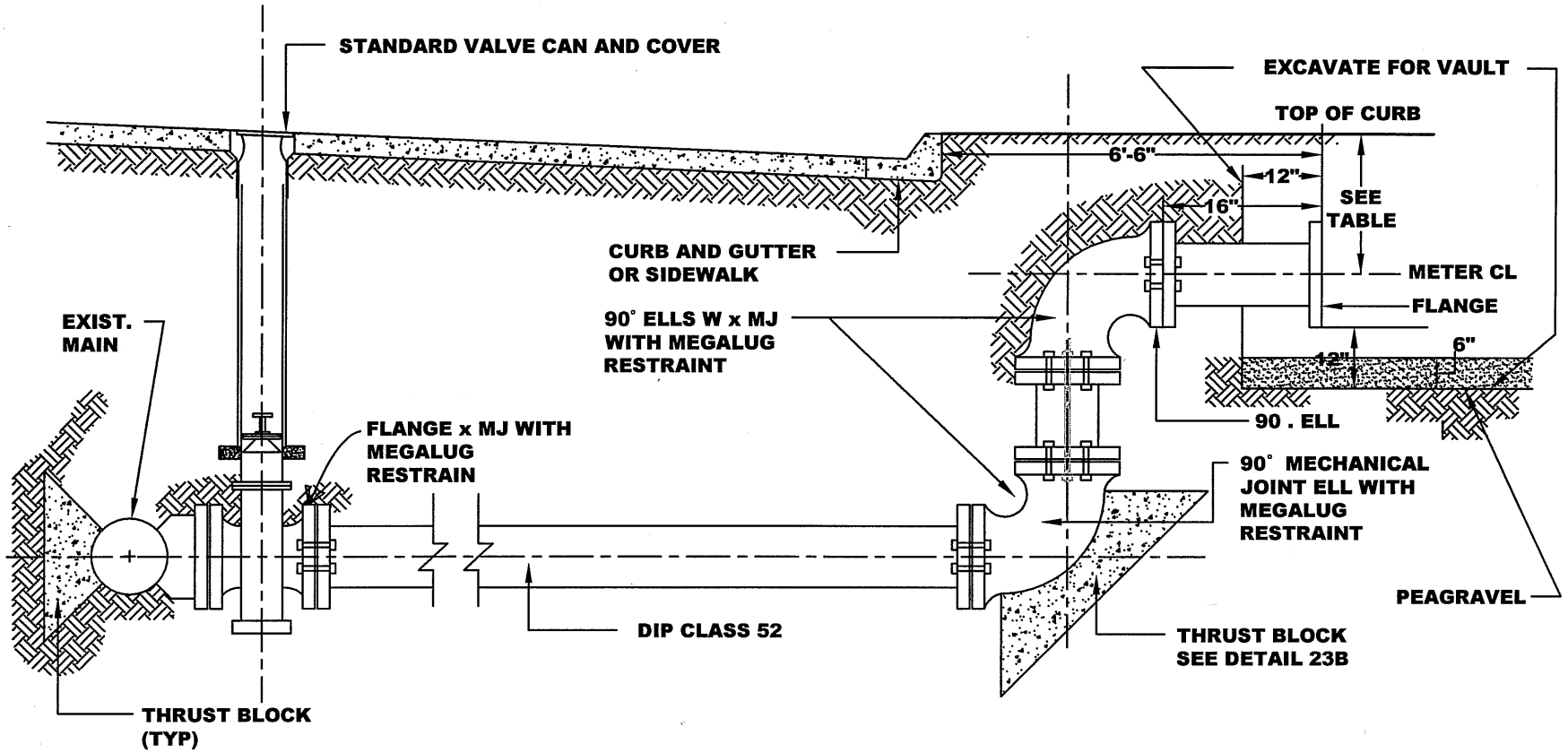

NOTES:

1. VAULTS WILL BE SET IN PUBLIC RIGHT - OF - WAY.
2. WHERE MOUND LANDSCAPPING IS USED, MOUND SHALL BE BEHIND THE VAULT, AND A RETAINING WALL SHALL BE CONSTRUCTED WITHIN THE MOUND AROUND THE VAULT.
3. AN EXCAVATED HOLE, COMPLETE WITH PEAGRAVEL BASE AND IN ACCORDANCE WITH THESE DETAILS, SHALL BE PROVIDED PRIOR TO CITY INSTALLATION OF VAULT, METER AND APPURTENANCES.

SERVICE SIZE	COMPOUND METER		TURBINE METER		MFM METER	
	TOC TO METER CENTERLINE	EXCAVATION SIZE LxW	TOC TO METER CENTERLINE	EXCAVATION SIZE LxW	TOC TO METER CENTERLINE	EXCAVATION SIZE LxW
4"	22"	6'x8'	24"	8'x5'	24"	5'x5'
6"	28"	6'x8'	26"	10'x6'	24"	6'x7'
8"	NA	NA	28"	11'x7'	28"	7'x8'
10"	NA	NA	NA	NA	28"	7'x8'

NA = NOT AVAILABLE

DATE: JUNE 30, 2006

APPROVED BY:

12B

TWO METER MANIFOLD SERVICE

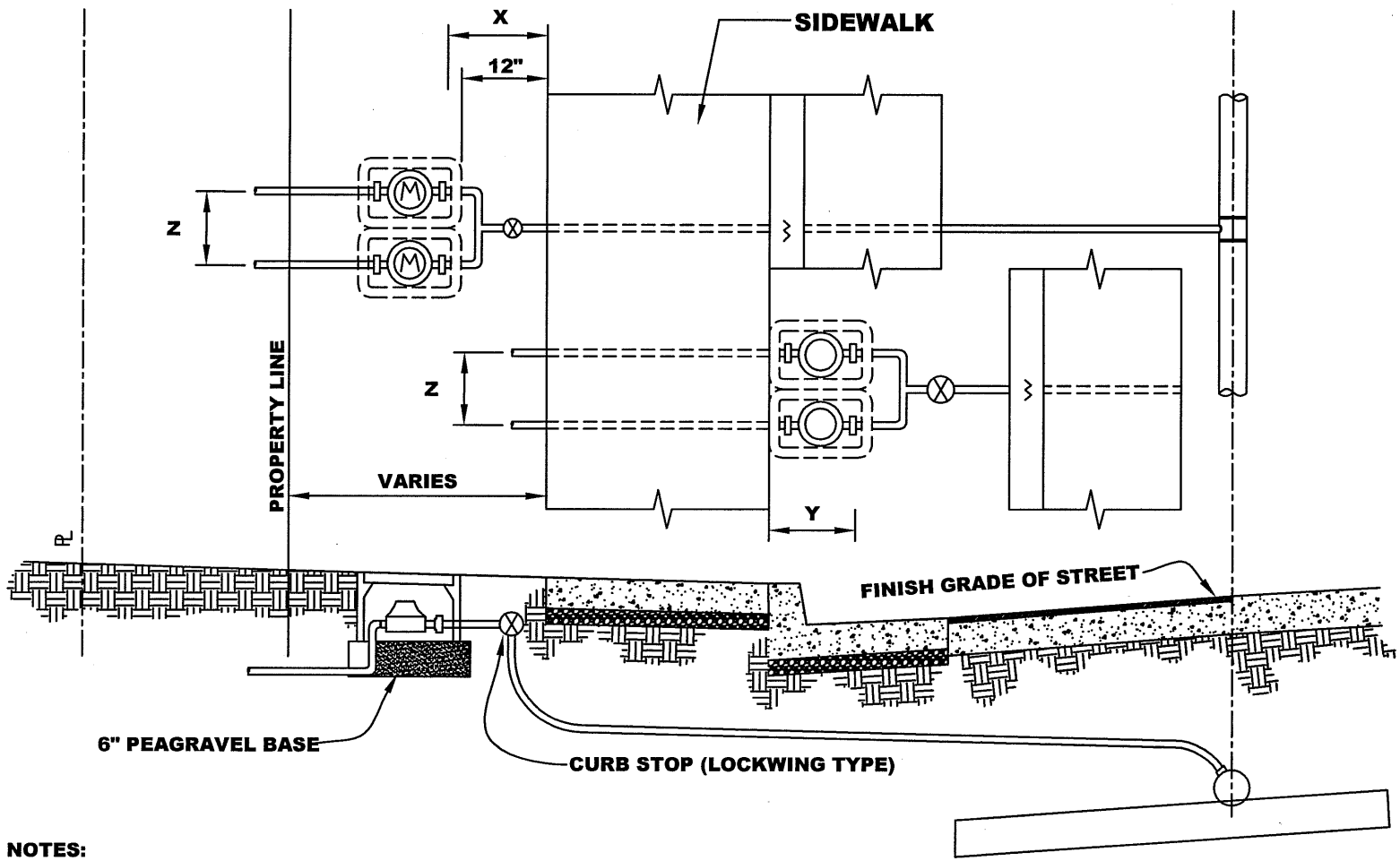

NOTES:

1. MANIFOLD SERVICE CAN BE USED IN LIEU OF INDIVIDUAL SERVICE LATERALS FROM THE STREET MAIN.
2. THIS DETAIL, FOR DOMESTIC OR IRRIGATION METER CONNECTIONS, MAY BE COMBINED WITH FIRE SERVICE. SEE STANDARD DETAIL 8B.
3. FOR MONOLOTHIC OR NO SIDEWALK LOCATIONS USE DETAIL WITH "X" DIMENSION. FOR NON-MONOLITHIC SIDEWALK, USE DETAIL WITH "Y" DIMENSION.
4. MATERIAL - MANIFOLD, NIPPLES, AND FITTINGS SHALL BE COPPER OR BRASS. COPPER PIPE CONNECTION TO BE COMPRESSION TYPE.
5. FOR FURTHER DETAILS, SEE STANDARD DETAIL 4B.

METER SIZE	5/8"	3/4"	1"	1 1/2"	2"
X	18"	18"	19"	19"	21"
Y	14"	14"	17"	20"	26"
Z	18"	18"	18"	24"	24"
EXCAV. SIZE (WxL) (in x in)	36x24	36x24	46x30	54x30	64x36

DATE : JUNE 30, 2006

DWG. 13B

APPROVED BY:

MANIFOLD SERVICE
3 OR MORE METERS

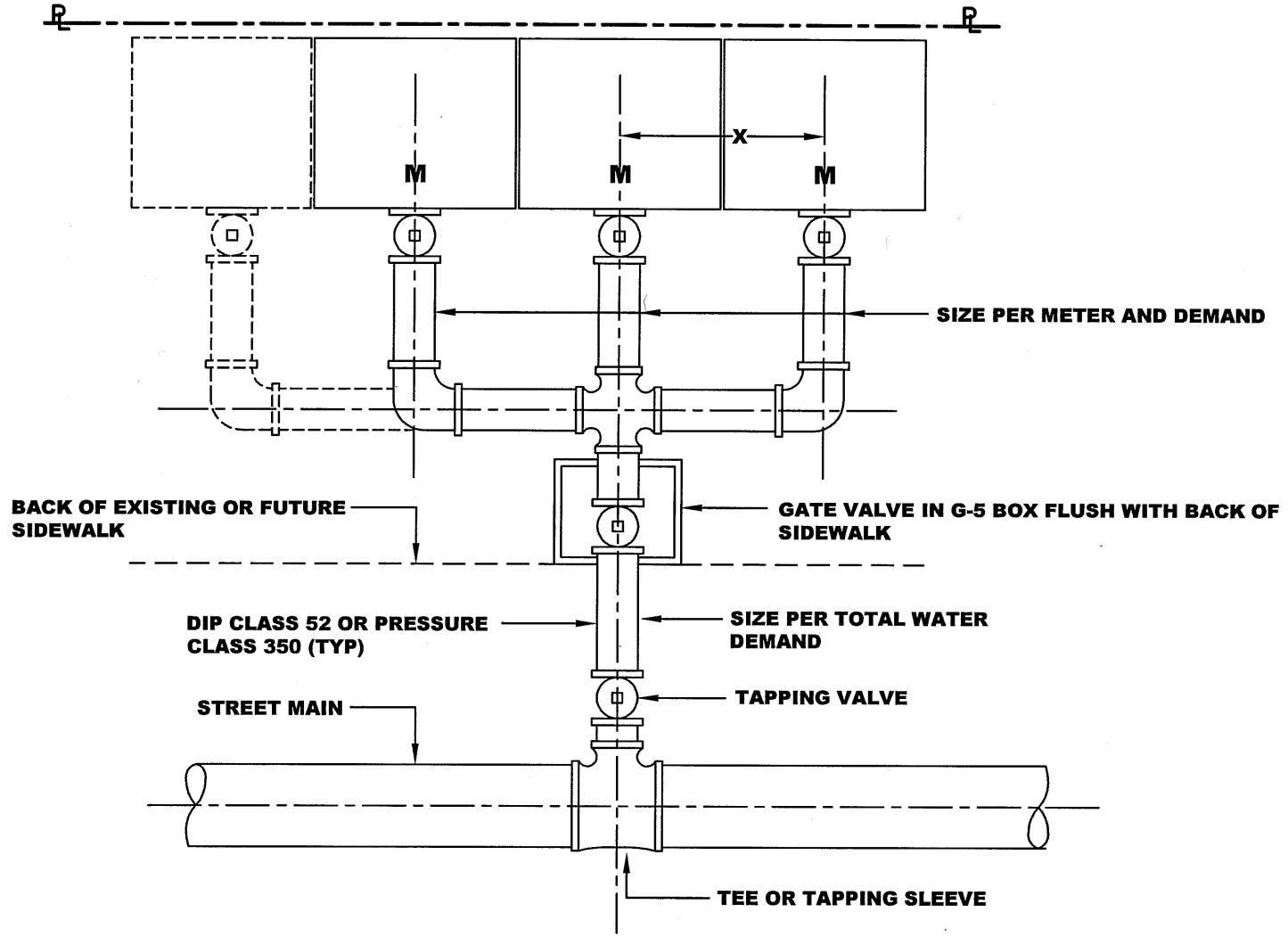

NOTES:

1. MAINFOLD SERVICE CAN BE USED IN LIEU OF A NUMBER OF INDUVIDUAL SERVICE LATERALS FROM THE STREET MAIN.
2. THIS DETAIL FOR DOMESTIC OR IRRIGATION METER CONNECTIONS MAY BE COMBINED WITH FIRE SERVICE, SEE STANDARD DETAIL 8B.
3. EACH METER CONNECTION MUST HAVE A CURB STOP BEFORE EACH METER.
4. MATERIAL - MANIFOLD, NIPPLES, AND FITTINGS SHALL BE COPPER OR BRASS. COPPER PIPE CONNECTION TO BE COMPRESSION TYPE.
5. FOR AN ALTERNATIVE PIPE ARRANGEMENT, SEE STD. DETAIL 14B - 1.
6. FOR FURTHER DETAILS, SEE STANDARD DETAIL 4B.

METER SIZE	1"	1½"	2"
X	18"	24"	24"
MIN. EXCAV. LENGTH FOR METER BOX (IN)	30"	30"	36"
EXCAV. WIDTH (IN)	[(SUM OF "X") + X + 6"]		

DATE: JUNE 30, 2006

APPROVED BY

14B

MANIFOLD SERVICE 3 OR MORE METERS
(ALTERNATIVE PIPE ARRANGEMENT)

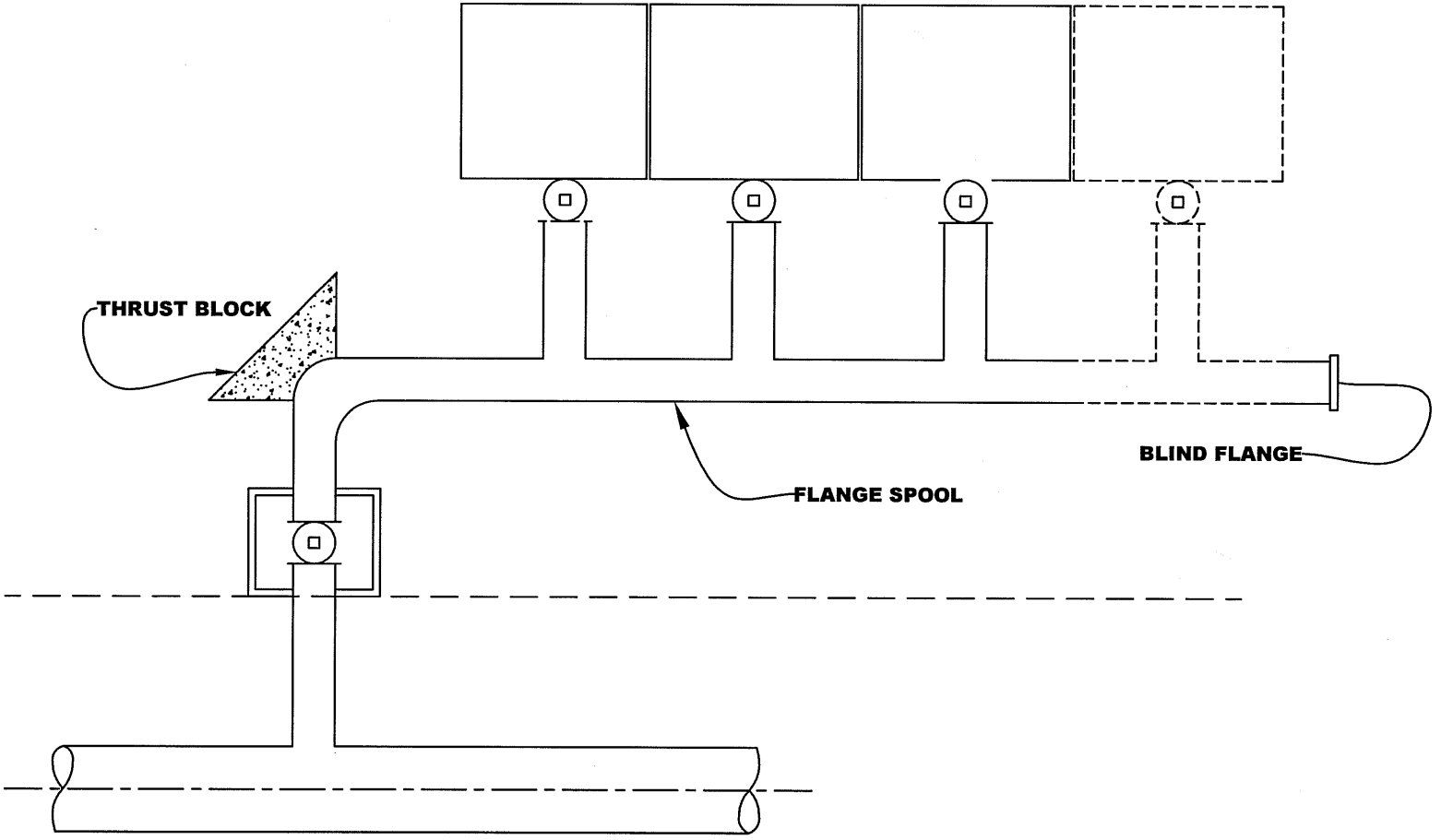

NOTES:

1. THIS IS AN ALTERNATIVE PIPE ARRANGEMENT TO THAT SHOWN ON STANDARD DETAIL 14B.
2. FOR FURTHER DETAILS, REFER TO STANDARD DETAIL 14B.

APPROVED BY:

DATE: JUNE 30, 2006

14B-1

INSTALLATION OF CUT - IN TEE AND GATE VALVE

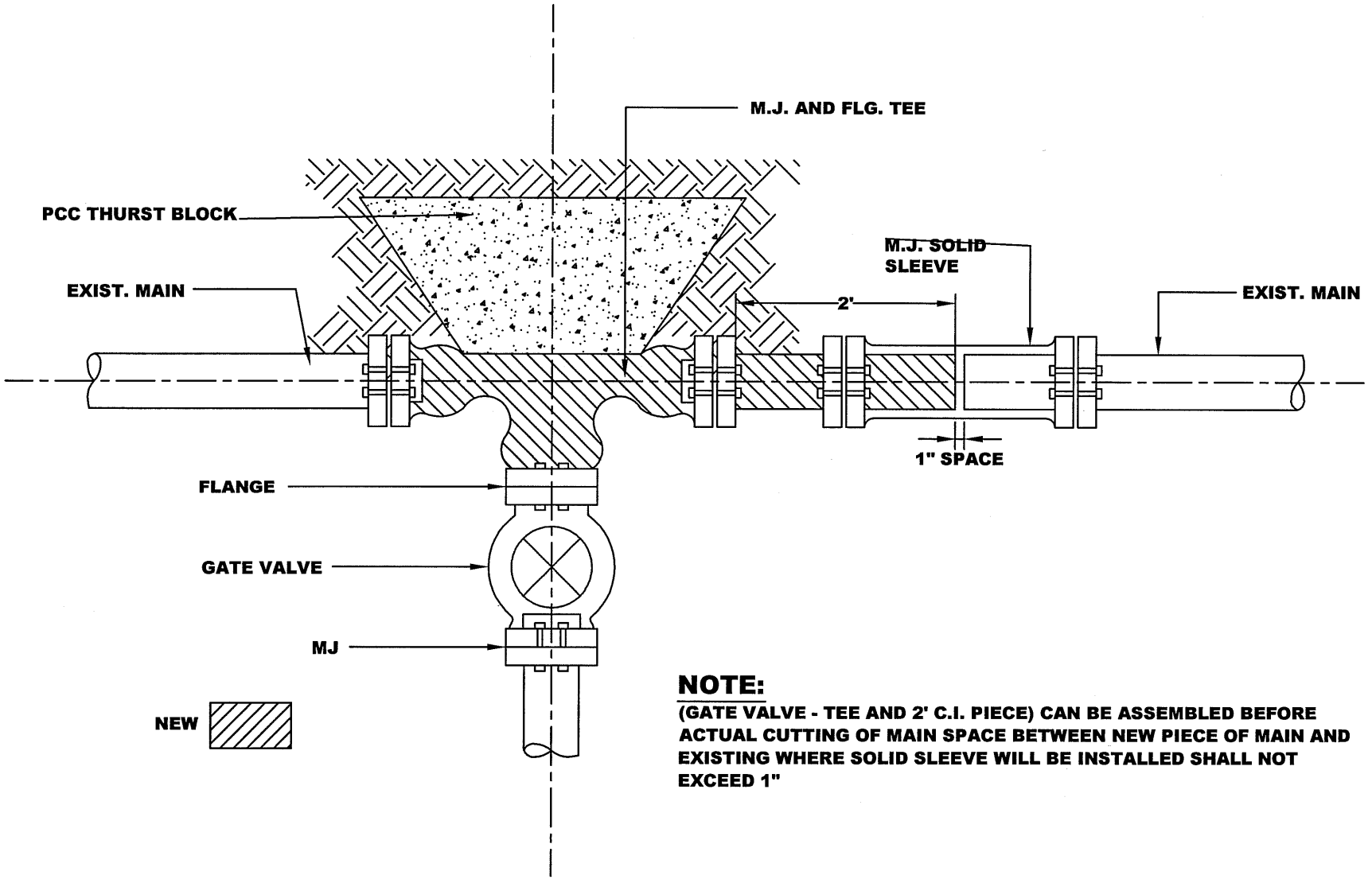

NOTE:

(GATE VALVE - TEE AND 2' C.I. PIECE) CAN BE ASSEMBLED BEFORE ACTUAL CUTTING OF MAIN SPACE BETWEEN NEW PIECE OF MAIN AND EXISTING WHERE SOLID SLEEVE WILL BE INSTALLED SHALL NOT EXCEED 1"

DATE: JUNE 30, 2006

APPROVED BY:

15B

THRUST BLOCK FOR HORIZONTAL BENDS

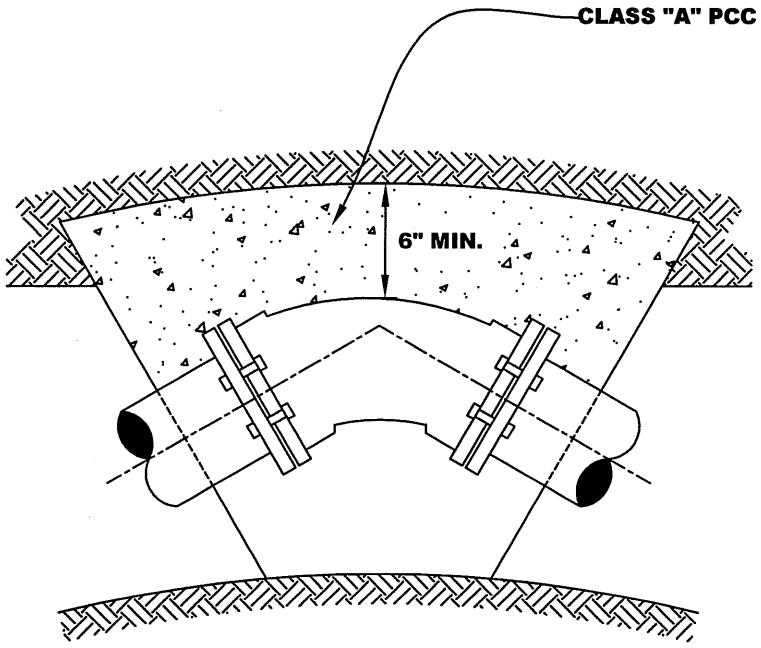

PLAN

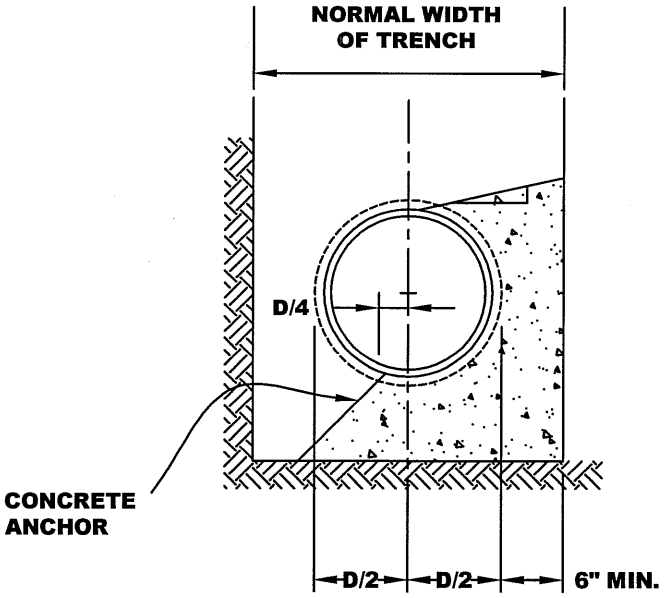

SECTION

NOTES:

1. D = PIPE DIAMETER
2. WRAP FLANGES/BOLTS IN VISQUEEN

DATE: JUNE 30, 2006

APPROVED BY:

DWG. 16B

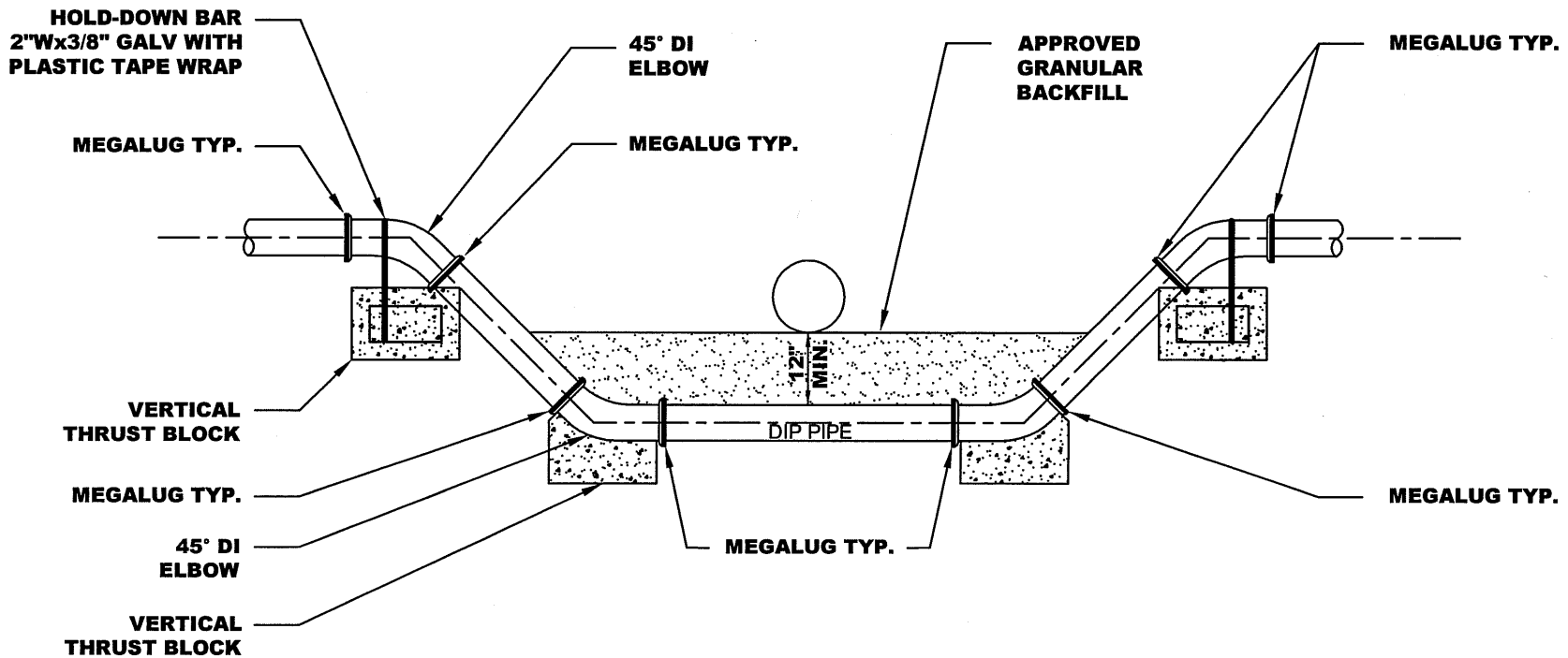

WATER LINE VERTICAL OFFSET

NOT TO SCALE

NOTE: ALL FITTINGS TO BE MJ x MJ WITH MEGALUG RESTRAINTS
TRUST BLOCK DIMENSIONS PER ENGINEER OR TABLE 17B1

WATER LINE VERTICAL OFFSET

DATE : JUNE 30, 2006

DWG. 17B

APPROVED BY:

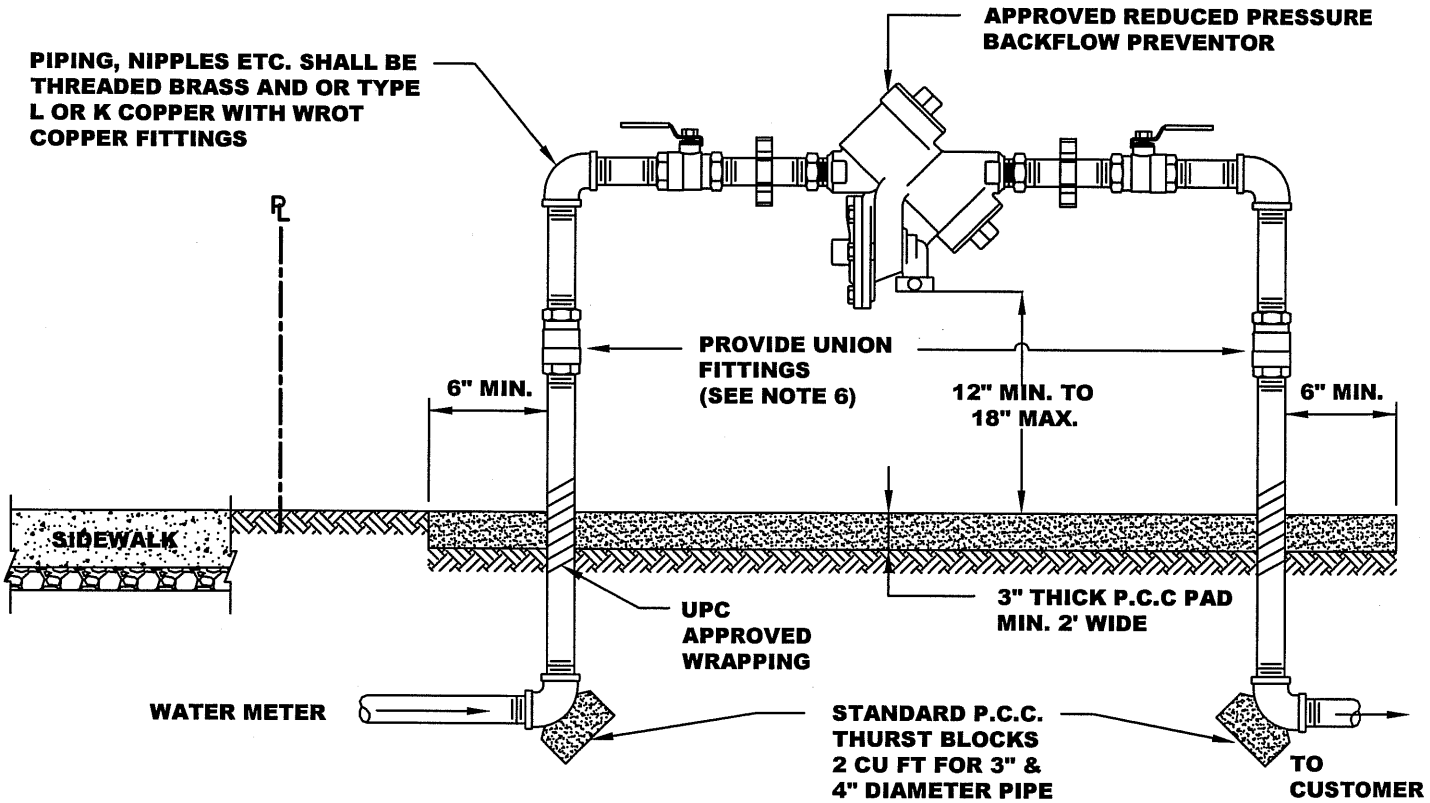

NOTES:

1. REDUCED PRESSURE PRINCIPLE TYPE BACKFLOW DEVICES SHALL BE REQUIRED FOR THE PROTECTION OF THE PUBLIC WATER SUPPLY. (NO DOUBLE CHECK VALVE ASSEMBLIES, SEE AIR GAP)
2. BACKFLOW PREVENTION ASSEMBLY SHALL BE ON THE LIST OF APPROVED DEVICES BY THE STATE OF CALIF. DEPT. OF HEALTH SERVICES.
3. BACKFLOW DEVICES SHALL BE INSTALLED ADJACENT TO AND ON PROPERTY SIDE OF SIDEWALK WHERE APPLICABLE. THE ASSEMBLY SHALL BE INSTALLED AS CLOSE AS POSSIBLE TO THE WATER METER.
4. ALL DEVICES WILL HAVE RESILIENT SEATED SHUT - OFF VALVES. TEST COCKS WILL HAVE THREADED ENDS.
5. PRESS. DIFFERENTIAL VALVE OPENING TO BE 12" TO MAX. OF 18" ABOVE GRADE.
6. PIPING, NIPPLES ETC. FOR STANDPIPES AND BACKFLOW COMPONENTS SHALL BE THREADED BRASS, TYPE L OR TYPE K COPPER. (NO GALVANIZED STEEL PIPING OR FITTINGS ALLOWED)
7. ENCLOSURE REQUIRED (SEE DWG. 20B) OR APPROVED EQUAL. LOCKABLE UV RESISTANT POLY - VINYL INSULATION JACKET MAY BE SUBSTITUTED WHEN RETROFITTING EXISTING BACKFLOW DEVICES. (TAPED ON INSULATION NOT ALLOWED)

BACKFLOW PREVENTION DEVICE (1 OF 2) SIZE UP TO 2"	APPROVED BY:	
	DATE : JUNE 30, 2006	DWG. 18B

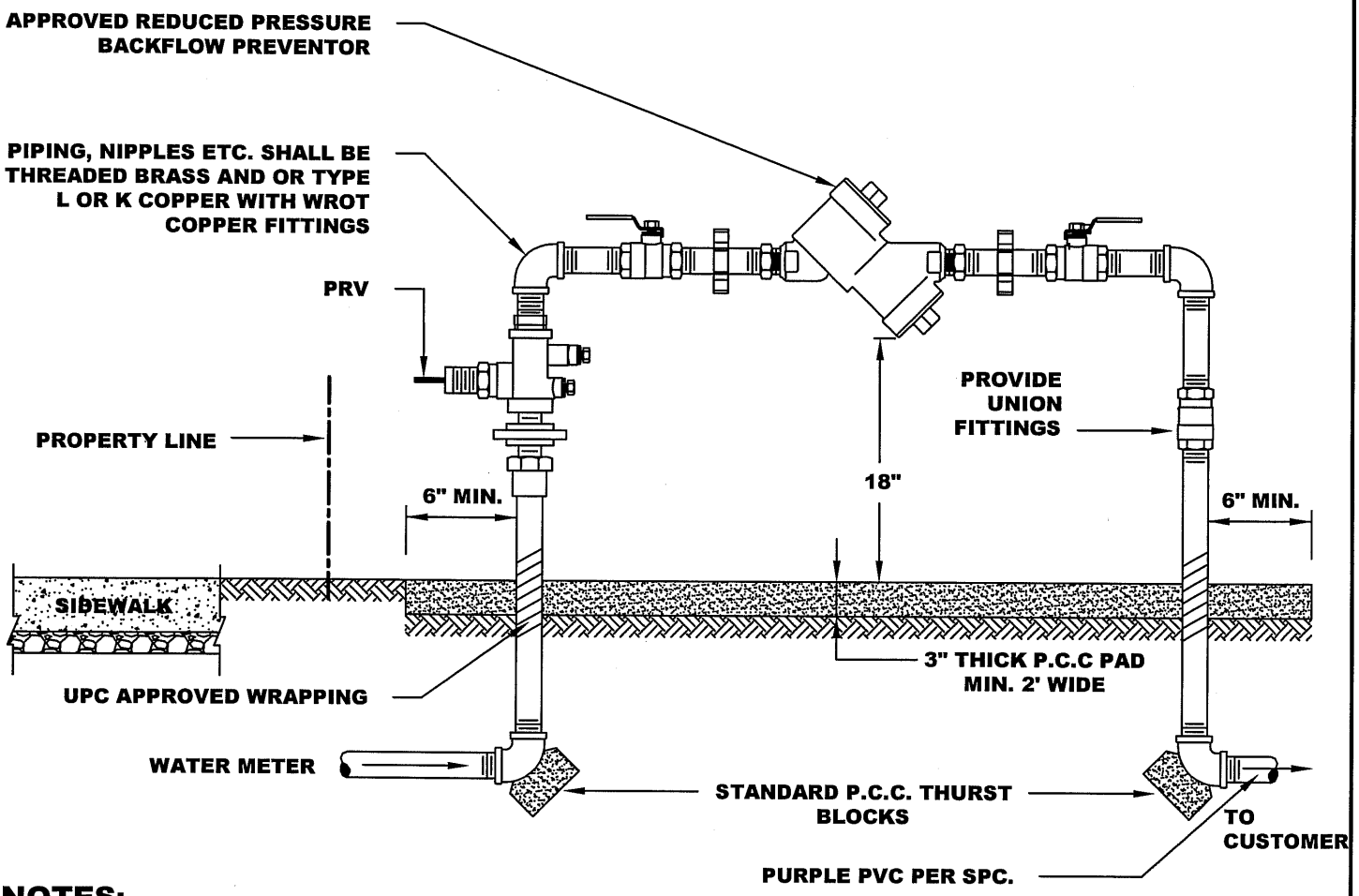

NOTES:

1. DOUBLE CHECK TYPE BACKFLOW DEVICES SHALL BE REQUIRED FOR ALL CONNECTIONS TO RECYCLED WATER SUPPLY. (SIZE TO RW METER)

2. BACKFLOW DEVICES SHALL BE INSTALLED ADJACENT TO AND ON PROPERTY SIDE OF SIDEWALK WHERE APPLICABLE. THE ASSEMBLY SHALL BE INSTALLED AS CLOSE AS POSSIBLE TO WATER METER.

3. ALL DEVICES WILL HAVE RESILIENT SEATED SHUT - OFF VALVES. TEST COCKS WILL HAVE THREADED ENDS.

4. BACK FLOW DEVICES TO BE 12" TO MAX OF 18" ABOVE GRADE.

5. PIPING, NIPPLES ETC. FOR STANDPIPES AND BACKFLOW COMPONENTS SHALL BE THREADED BRASS AND OR TYPE L OR TYPE K COPPER WITH WROT COPPER FITTINGS. (NO GALVANIZED STEEL PIPING OR FITTINGS ALLOWED)

6. PRESURE REDUCER REQUIRED ON UPSTREAM SIDE OF BF DEVICE. (SIZE TO BF)

7. ENCLOSURE REQUIRED FOR NEW DEVELOPMENT (NEW CONSTRUCTION) PROJECTS (SEE DWG. 20B OR EQUAL. FOR RETROFITING EXISTING BACKFLOW DEVICES, NO ENCLOSURE REQUIRED, DEVICE MUST BE SPRAY PAINTED WITH TWO COATS GLOSS BLACK UV & WEATER RESISTANT PAINT (RUSTOLEUM, ETC)

BACKFLOW PREVENTION DEVICE (2 OF 2) RECYCLED WATER	APPROVED BY:	
	DATE : JUNE 30, 2006	DWG. 18B-1

2006 STANDARD DETAILS

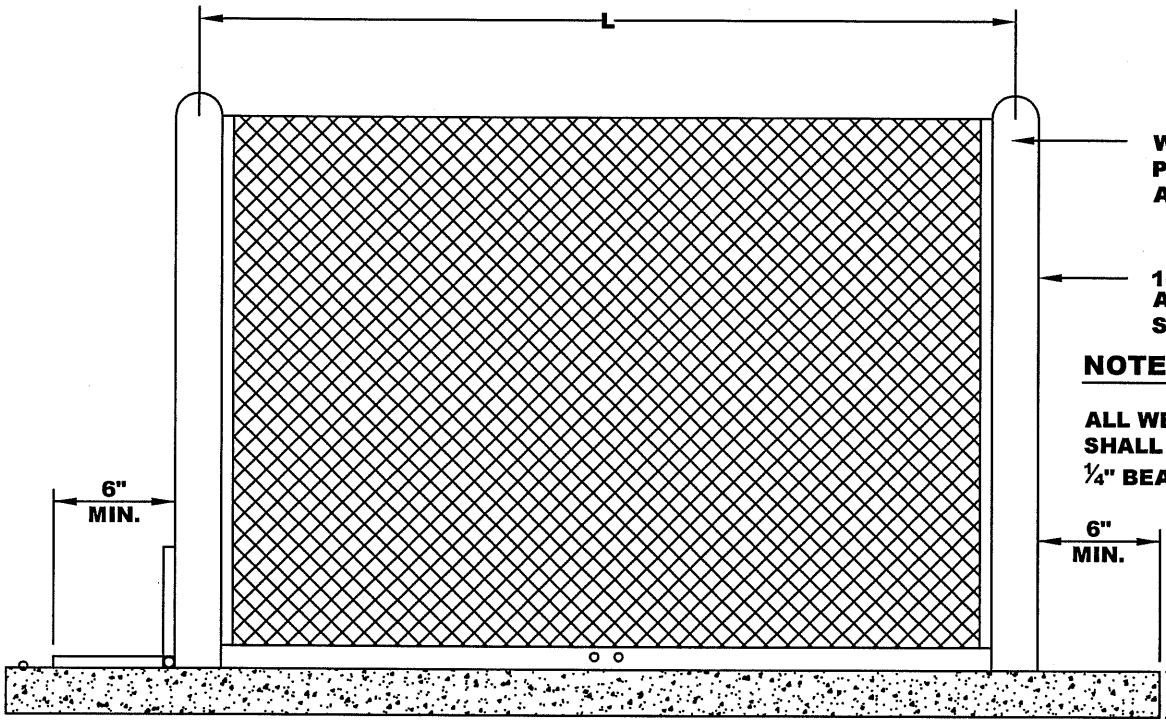

NOTE:

ALL WELDED AREAS SHALL BE A MINIMUM OF ¼" BEAD EVERY 4"

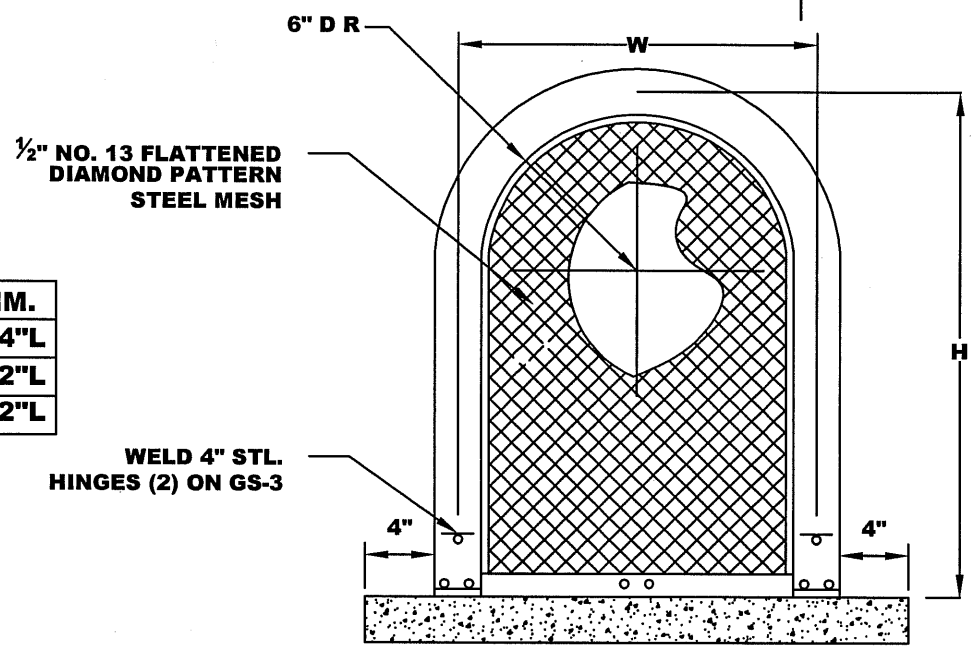

MODEL	CENTERLINE DIM.
GS - 1	12"W x 24"H x 24"L
GS - 2	12"W x 24"H x 32"L
GS - 3	12"W x 18"H x 42"L

NOTES:

1. ENCLOSURE REQUIRED ON ALL NEW CONSTRUCTION BACKFLOW DEVICES FOR SIZES ¾" TO 2".
2. "GUARDSHACK TMENCLOSURE" MODEL GS OR APPROVED EQUAL, PHOENIX, ARIZONA 85032 (602-788-5411)
3. AFTER ALL WELDING, ELECTROSTATIC APPLICATION OF POWDER SHALL BE FUSION BONDED TO ENTIRE ENCLOSURE. (BLACK)
4. ALL BOLTS SHALL BE ZINC PLATED.

BACKFLOW PREVENTION DEVICE ENCLOSURE

APPROVED BY:

DATE: JUNE 30, 2006

19B

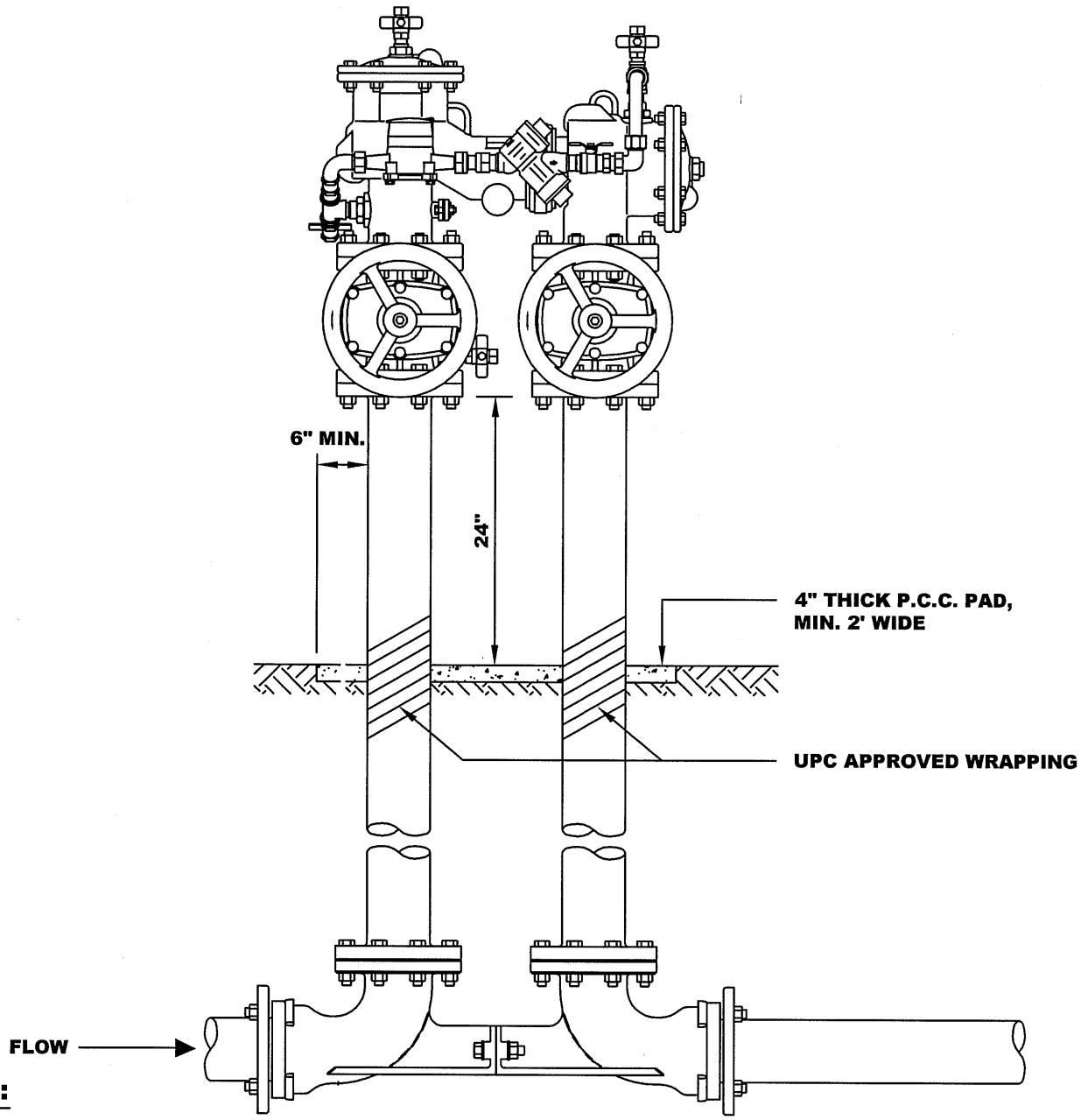

NOTES:

1. REDUCED PRESSURE PRINCIPLE TYPE BACKFLOW DEVICES SHALL BE WILKINS 475, FEBCO880, CLAVAL RP8N OR APPROVAL EQUAL.
2. BACKFLOW PREVENTION ASSEMBLY SHALL BE ON THE LIST OF APPROVED DEVICES BY THE STATE OF CALIF. DEPT. OF HEALTH SERVICES.
3. BACKFLOW DEVICES SHALL BE INSTALLED ADJACENT TO AND ON PROPERTY SIDE OF SIDEWALK WHERE APPLICABLE. THE ASSEMBLY SHALL BE INSTALLED AS CLOSE AS POSSIBLE TO THE WATER METER.
4. ALL DEVICES WILL HAVE RESILIENT SEATED SHUT - OFF VALVES. TEST COCKS WILL HAVE THREADED ENDS.
5. PRESS. DIFFERENTIAL VALVE OPENING TO BE 24" ABOVE GRADE.
6. ALL PIPES AND SPOOLS SHALL BE DUCTILE IRON AND ALL JOINTS FLANGED.
7. MASTIC ALL BOLTS/NUTS OR USE STAINLESS STEEL COMPONENTS.
8. INSTALL TWO ADJUSTABLE PIPE SUPPORTS. (GRINNELL OR APPROVED EQUAL)
9. ENTIRE ASSEMBLY (EXCLUDING I.D TAG) TO BE SPRAY PAINTED WITH 2 COATS OF BLACK UV AND WEATHER RESISTANT PAINT. (RUSTOLEUM, ETC.)

DOMESTIC RP ASSEMBLY BACKFLOW PREVENTION DEVICE SIZE 2½" AND LARGER	Barbara Kaya APPROVED BY:	
	DATE : JUNE 30, 2006	DWG. 20B

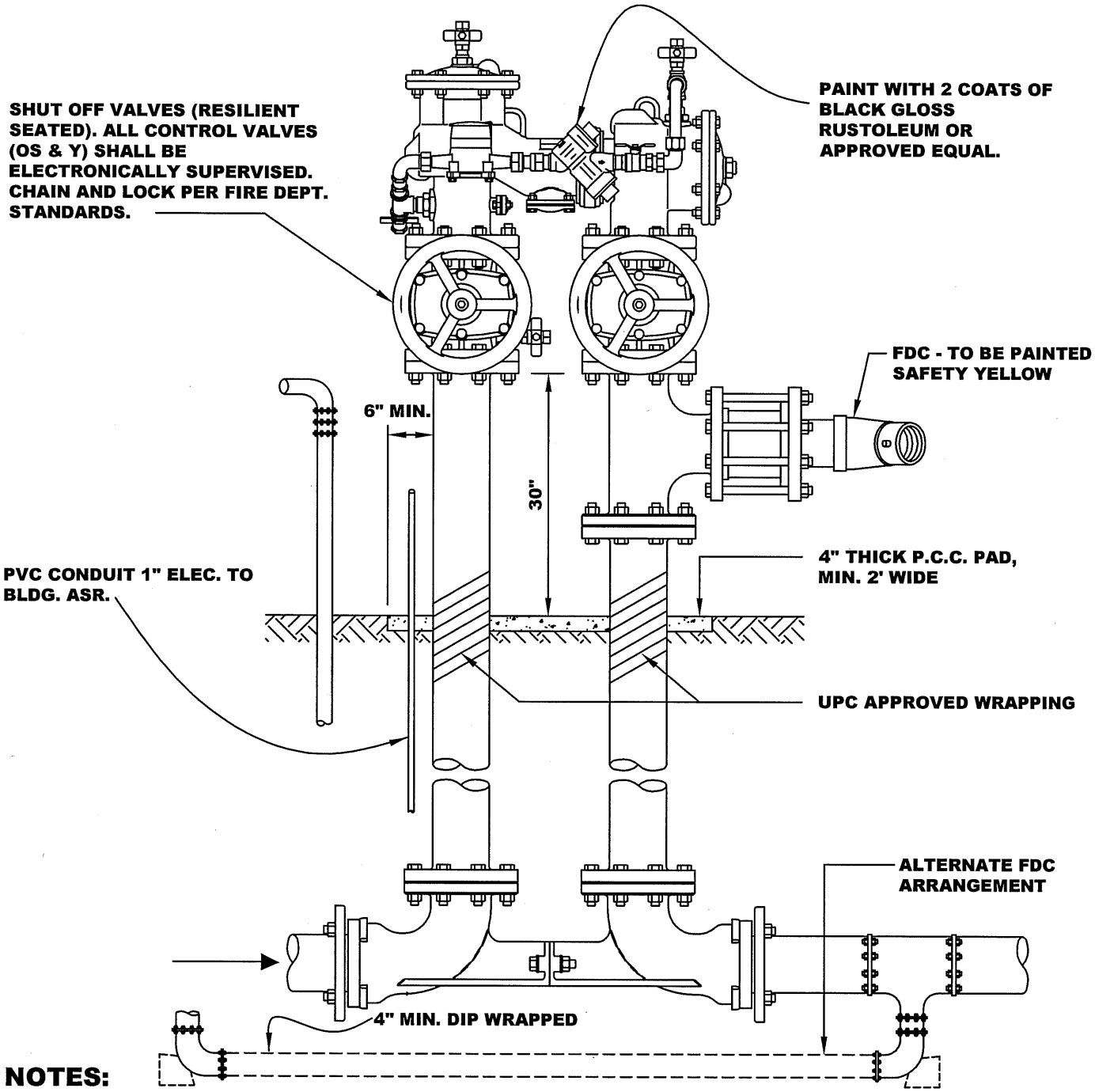

NOTES:

1. ALLBACKFLOW PREVENTION ASSEMBLIES SHALL BE ON THE APPROVED LIST OF THE STATE OF CALIF. HEALTH SERVICES DEPT.
2. DOUBLE CHECK DETECTOR ASSEMBLY SHALL BE FEBCO 876 OR WILKINS 450DA.
3. WHEN REQUIRED BY FIRE DEPT., REDUCED PRESSURE DETECTOR ASSEMBLY SHALL BE WILKINS 475DA OR PRIOR APPROVED EQUAL.
4. FDC TO REMAIN VISIBLE AND ACCESSIBLE. PAINT SAFETY YELLOW
5. DIP TO BE PROTECTED WRAP CA - 1200, POLYGUARD CA - 14 MASTIC OR APPROVED EQUAL.
6. ALL CONNECTIONS TO BE FLANGED.
7. ALL TRIM HARDWARE TO BE BRASS OR BRONZE.
8. METER TO BE CUBIC FT. REGISTRATION.
9. MASTIC ALL BOLTS/NUTS OR USE STAINLESS STEEL COMPONENTS.

FIRE SERVICE - DOUBLECHECK / RP DETECTOR ASSEMBLY	APPROVED BY:	
	DATE : JUNE 30, 2006	DWG. 21B

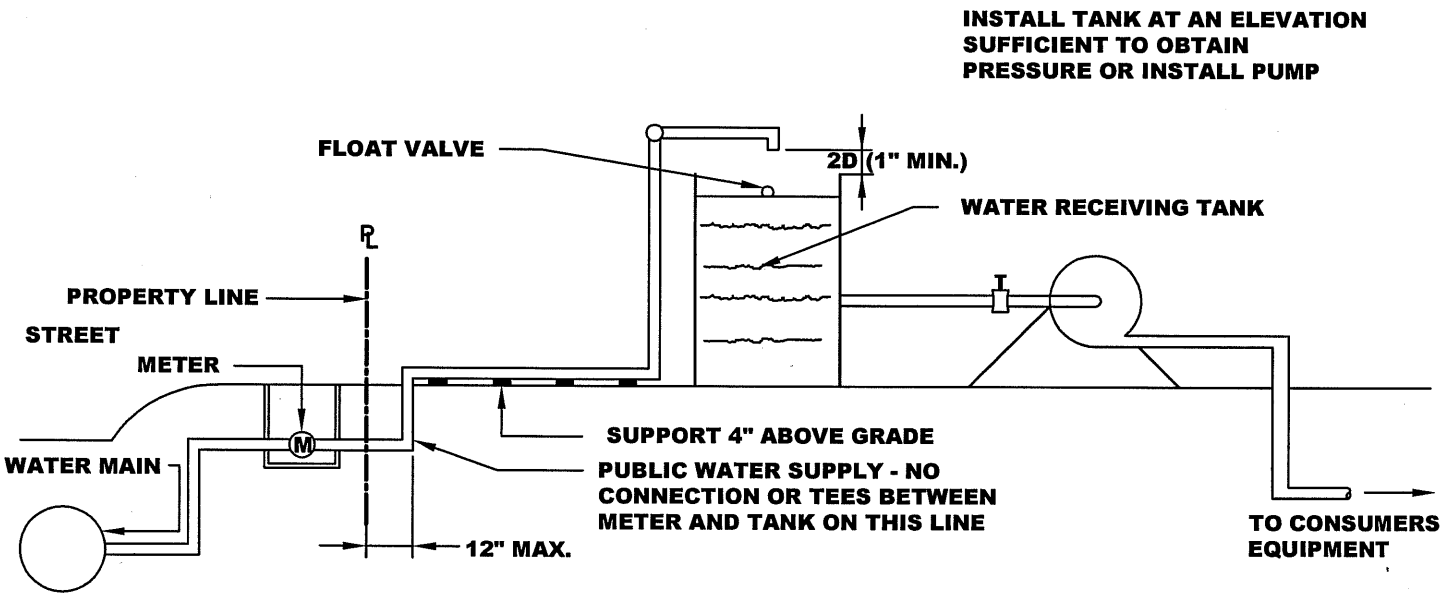

AIR GAP SEPARATION

NOTE:
TANK SHOULD BE OF SUBSTANTIAL CONSTRUCTION AND OF A KIND AND SIZE TO SUIT CONSUMERS NEEDS. TANK MAY BE SITUATED AT GROUND LEVEL (WITH A PUMP TO PROVIDE ADEQUATE PRESSURE HEAD) OR TO BE ELEVATED ABOVE GROUND.

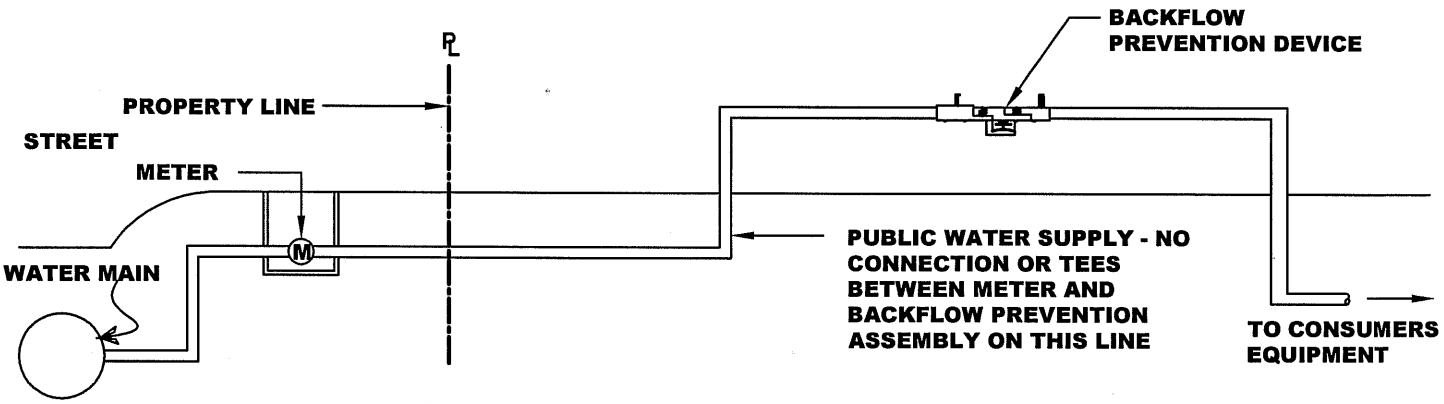

BACKFLOW PREVENTION ASSEMBLY

NOTE: SEE DETAILS 18B & 18B-1

INSTALLATION OF BACKFLOW PREVENTION DEVICE	APPROVED BY:	
	DATE: JUNE 30, 2006	22B

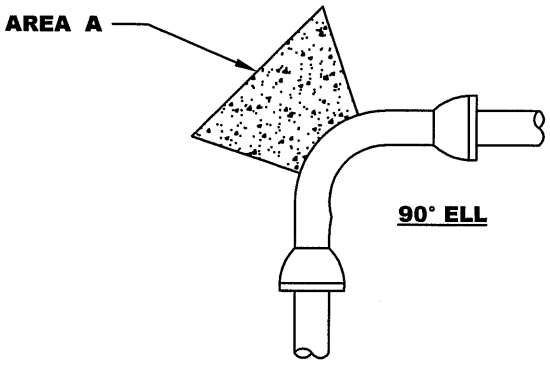

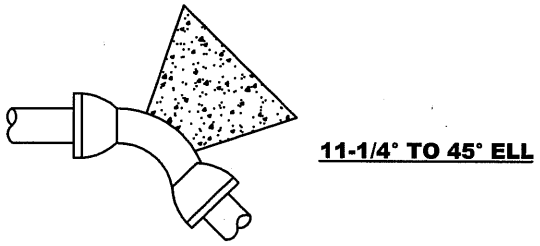

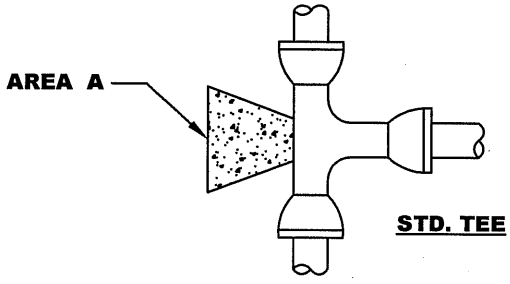

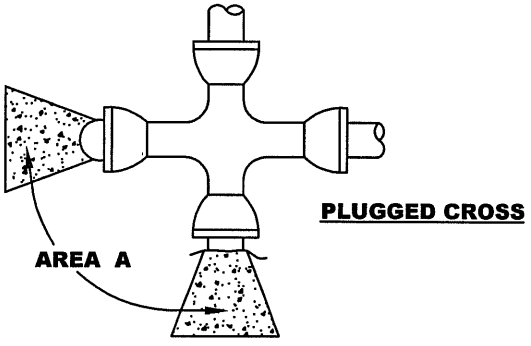

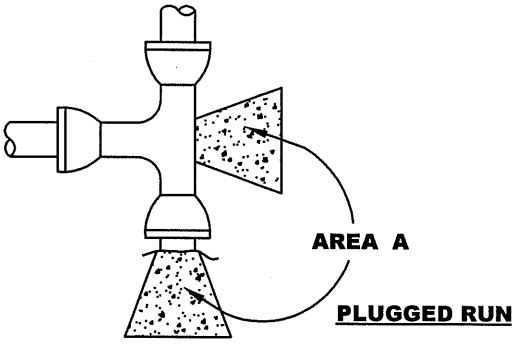

AREA (A) IN SQ. FT.

TYPE OF FITTING	SIZE OF PIPE							
	4"	6"	8"	10"	12"	14"	16"	18"
90° ELL	1.5	3	5	8	11	15	19	24
45° ELL	1	2	3	4	6	8	11	13
22 1/2° ELL	1	2	2	2	3	4	6	7
11 1/4° ELL	1	2	2	2	2	2	3	4
PLUG/TEE	1	2	4	6	8	11	14	17

NOTE:

1. ALL THRUST BLOCKS SHALL BEAR AGAINST UNDISTURBED EARTH.

BASED ON SOIL BEARING VALUE OF 3,000 LBS. PER SQ. FT. AND WATER PRESSURE OF 200 PSI FORM AS REQUIRED TO KEEP HYDRAULIC FORCES OFF OF MECHANICAL JOINT OR FLANGE BOLTS.

NO SCALE

THRUST BLOCKS MISCELLANEOUS

APPROVED BY:

DATE: JUNE 30, 2006

DWG. 23B

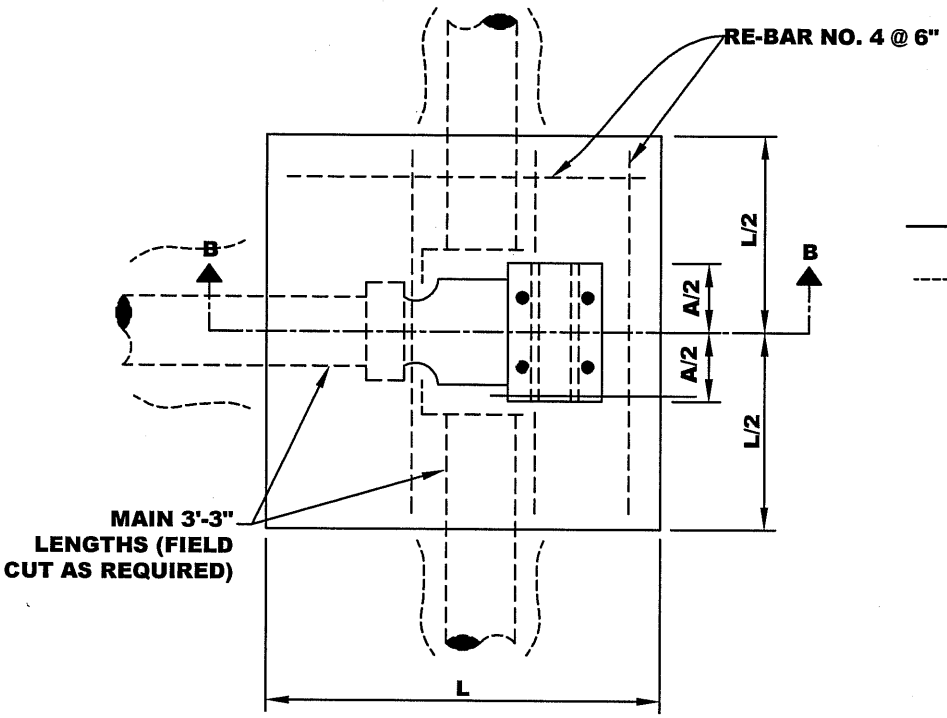

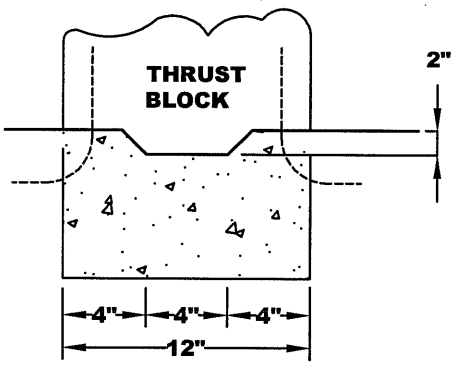

KEY DETAIL

NOTES:

1. ALL FITTING JOINTS WILL BE CLEAR OF ALL CONCRETE.
2. CONCRETE SHALL BE TYPE V.
3. USE 3' LENGTHS OF PIPE ONE EACH SIDE EVERY FITTING.

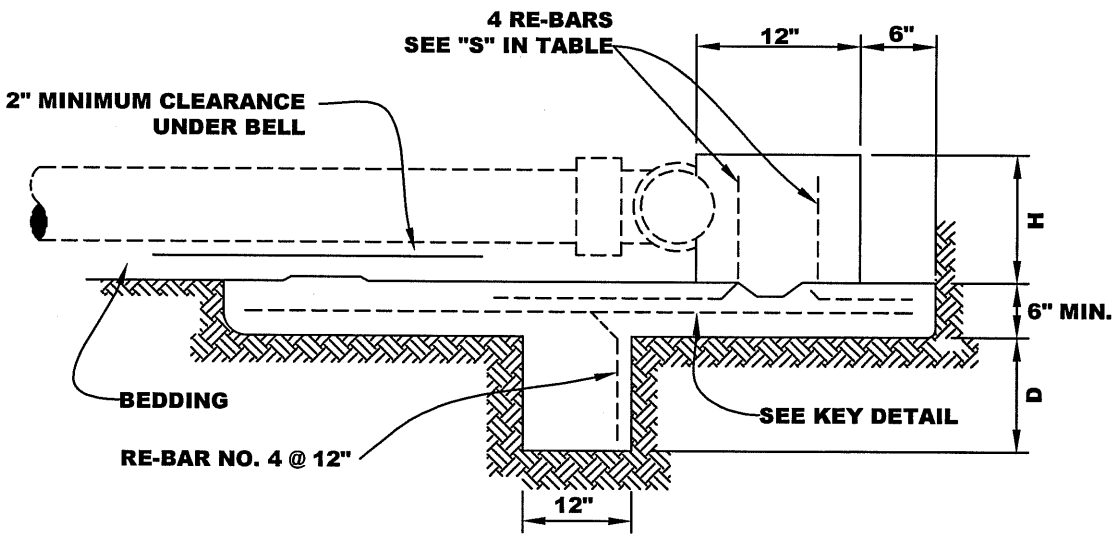

SECTION B-B

DIMENSION TABLE FOR TEE AND DEAD ENDS						
PIPE DIAMETER	TEE A	DEAD END A	D	H	L	RE-BAR "S" SIZE
6"	16"	8"	12"	12"	4'	NO. 4
8"	18"	10"	12"	14"	4'	NO. 4
10"	22"	12"	24"	16"	4'	NO. 5
12"	24"	14"	36"	18"	5'	NO. 6

NO SCALE

2006 STANDARD DETAILS

THRUST BLOCKS IN BAY MUD - 1 OF 2

APPROVED BY:

DATE : JUNE 30, 2006

DWG. 24B

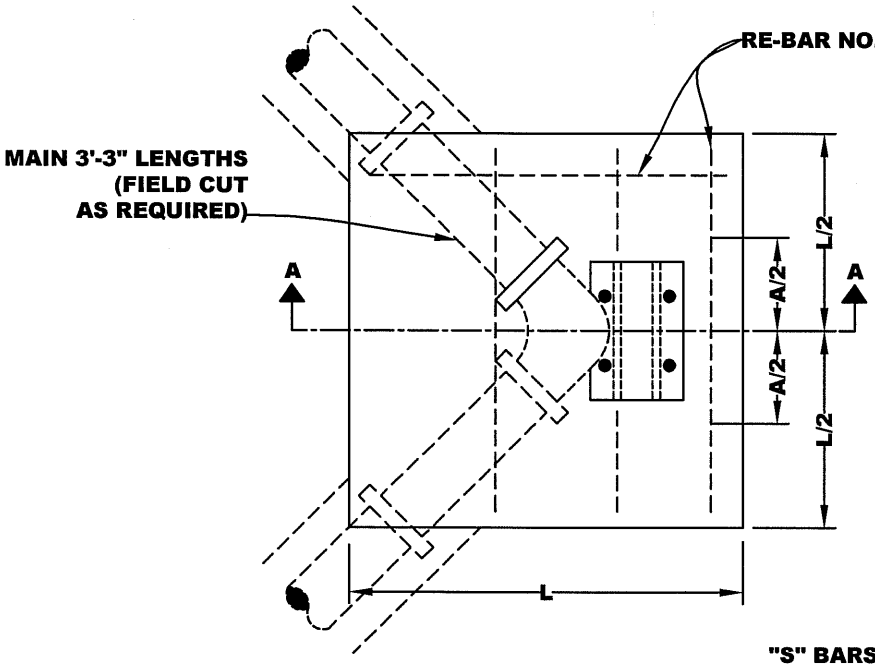

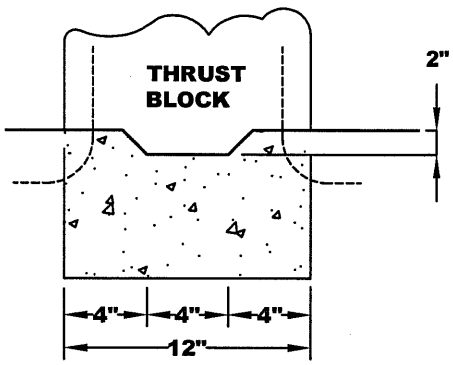

KEY DETAIL

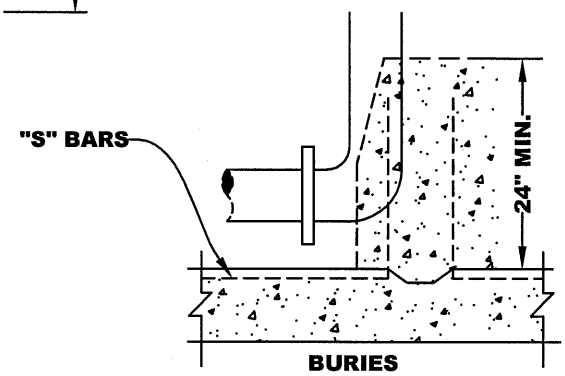

BURIES

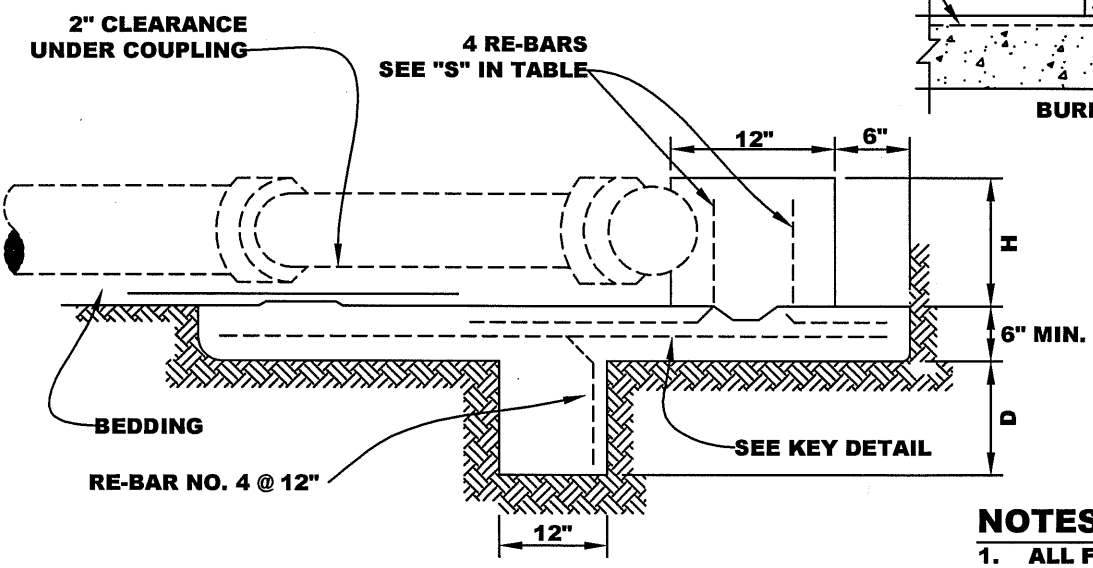

SECTION A-A

NOTES:

1. ALL FITTING JOINTS WILL BE CLEAR OF ALL CONCRETE.
2. CONCRETE SHALL BE TYPE V.
3. USE 3' LENGTHS OF PIPE ONE EACH SIDE EVERY FITTING.

DIMENSION TABLE FOR HORIZONTAL BENDS

PIPE DIAMETER	90 DEG BEND					45 DEG BEND					22 DEG 30' BEND					11 DEG 15' BEND				
	A	D	H	L	RE - BAR "S" SIZE	A	D	H	L	RE - BAR "S" SIZE	A	D	H	L	RE - BAR "S" SIZE	A	D	H	L	RE - BAR "S" SIZE
6"	15"	12"	12"	4'	NO. 4	10"	12"	12"	3'	NO. 4	8"	6"	12"	3'	NO. 4	7"	6"	12"	3'	NO. 4
8"	18"	12"	14"	4'	NO. 4	12"	12"	14"	4'	NO. 4	9"	6"	14"	3'	NO. 4	8"	6"	14"	3'	NO. 4
10"	23"	24"	16"	5'	NO. 5	13"	12"	16"	4'	NO. 5	11"	12"	16"	4'	NO. 4	9"	6"	16"	3'	NO. 5
12"	26"	36"	18"	5'	NO. 6	15"	24"	18"	4'	NO. 5	13"	12"	18"	4'	NO. 4	10"	6"	18"	4'	NO. 5

NO SCALE

THRUST BLOCKS IN BAY MUD - 2 OF 2

APPROVED BY:

DATE : JUNE 30, 2006

DWG. 25B

2006 STANDARD DETAILS