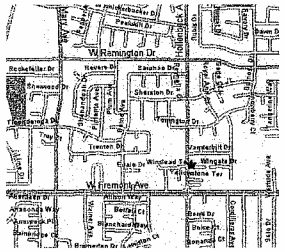

SITE MAP
NOT TO SCALE

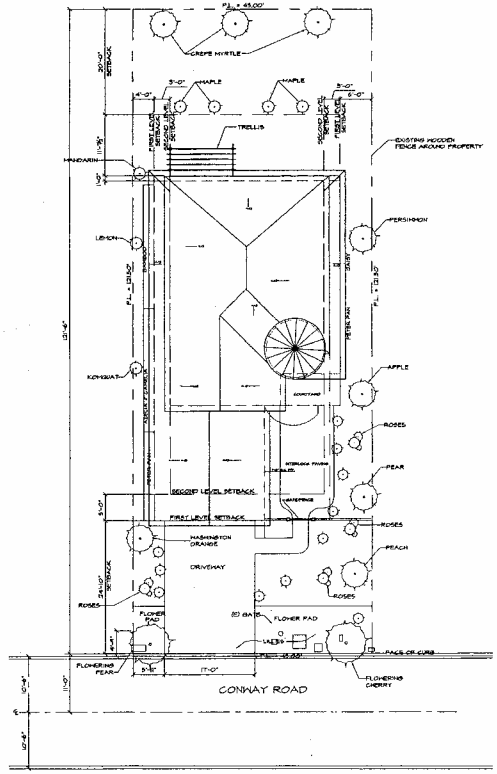

PROPOSED SITE PLAN
SCALE: 1/8" = 1'-0"

PROJECT DATA

LOT AREA:	5,462 SQ. FT.
FIRST FLOOR:	1,498 SQ. FT.
GARAGE:	411 SQ. FT.
SECOND FLOOR:	1,074 SQ. FT.
COURTYARD:	67 SQ. FT
TOTAL RESIDENCE:	3,061 SQ. FT.
LOT COVERAGE:	33%
F.A.R.:	51.5%

SCALE: 1/8" = 1'-0"

REVISIONS | BY

CAD VERSION
1220 PERKINS AVENUE
SUNNYVALE, CA 94086
(408) 246-8977
www.cadversion.com

SITE PLAN

LOH RESIDENCE
687 CONWAY
SUNNYVALE, C. .087

DRAWN
CHRIS RILEY
CHECKED
GARY GATES
DATE
11/04/03
SCALE
1/8" = 1'-0"
JOB NO.
03906
SHEET
A.0

ATTACHMENT 3
Page 1 of 6

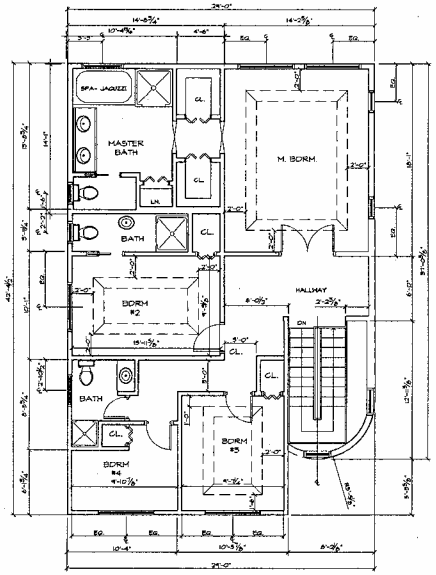

UPPER FLOOR PLAN
SCALE: 1/4" = 1'-0"

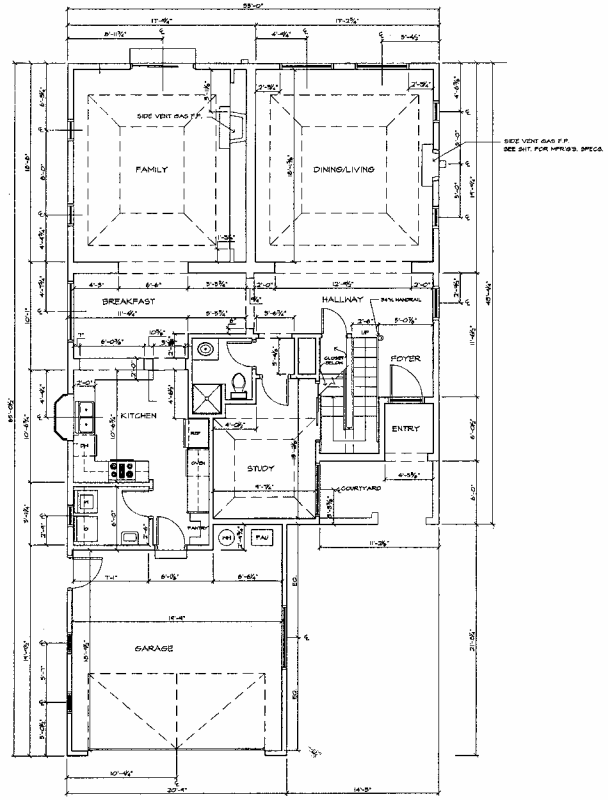

MAIN FLOOR PLAN
SCALE: 1/4" = 1'-0"

SCALE: 1/4" = 1'-0"

REVISIONS	BY

CADVERSION
730 PERRING AVENUE
SUNNYVALE, CA 94086
(245) 844-FAX (408) 245-5871
www.cadversion.com

FLOOR PLANS

LOH RESIDENC
687 CONWAY
SUNNYVALE, C. 087

DRAWN
CHRIS RILEY
CHECKED
GARY CATES
DATE
11/14/03
SCALE
1/4" = 1'-0"
JOB NO.
03066
SHEET
A.1

ATTACHMENT 3
Page 2 of 6

SOUTH ELEVATION
SCALE: 1/4" = 1'-0"

EAST ELEVATION
SCALE: 1/4" = 1'-0"

NORTH ELEVATION
SCALE: 1/4" = 1'-0"

WEST ELEVATION
SCALE: 1/4" = 1'-0"

REVISIONS	BY

CADVISION
720 PERRINO AVENUE
NOVATO, CA 94945
249.8544 FAX:(408)249.8577
www.cadvisionstudio.com

EXTERIOR ELEVATIONS

LOH RESIDENCE
687 CONWAY F
SUNNYVALE, CA 87

DRAWN
CHRIS RILEY
CHECKED
GARY CATES
DATE
1/09/03
SCALE
1/4" = 1'-0"
JOB NO.
03066
SHEET
A.2

ATTACHMENT 3
Page 3 of 6

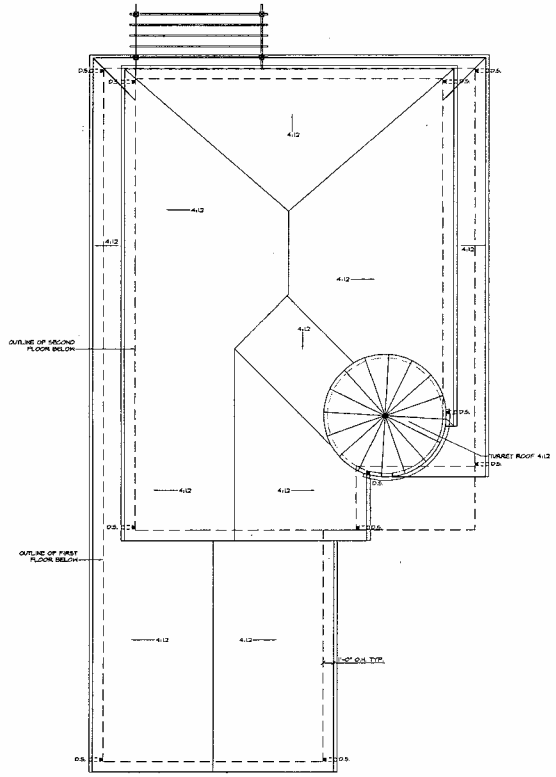

ROOF PLAN
SCALE: 1/4" = 1'-0"

SCALE: 1/4" = 1'-0"

REVISIONS | BY

720 PERKINS AVENUE
SUNNYVALE, CA 94086
1.248.8844 FAX 405.248.8877
www.cadinnovation.com

ROOF PLAN

LOH RESIDENC
687 CONWAY
SUNNYVALE, C. J87

DRAWN
CHRIS RILEY
CHECKED
GARY CATES
DATE
11/04/03
SCALE
1/4" = 1'-0"
JOB NO.
03668
SHEET
A.3

ATTACHMENT 3
Page 4 of 6

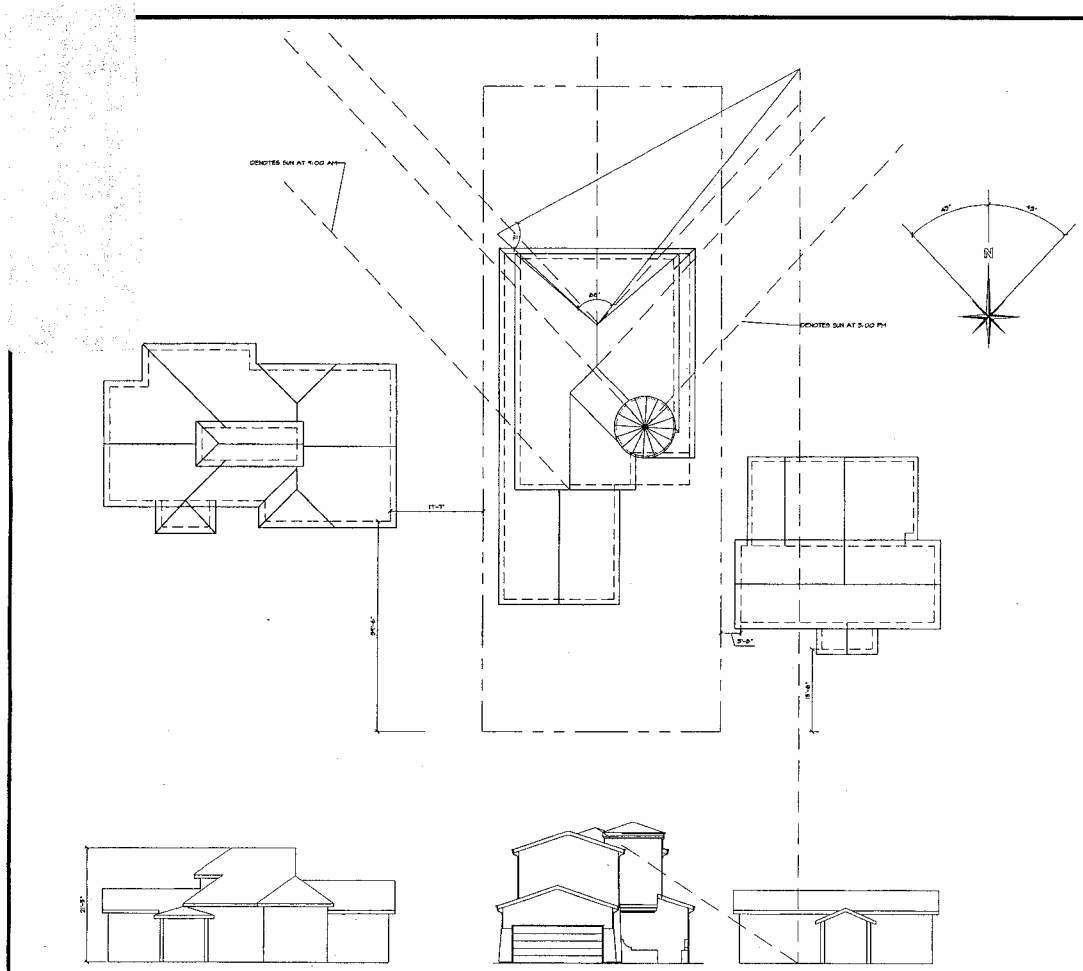

SHADOW STUDY

ANALYSIS CONCLUDES THAT LESS THAN 7.5% OF NEIGHBOR'S ROOF IMPACTED BY NEW HOME.

NO IMPACT DUE TO MORNING SUN.

FOR FURTHER QUESTIONS OR CONCERNS PLEASE SEE DIANNA O'DELL.

REVISIONS | BY

CADVISION

SOLAR ACCESS & SHADOW ANALYSIS

LOH RESIDENC
687 CONWAY I
SUNNYVALE, CA. 87

DRAWN
CHRIS RILEY
CHECKED
GARY CATES
DATE
SCALE
JOB NO.
SHEET
A.4

ATTACHMENT 3
Page 5 of 6

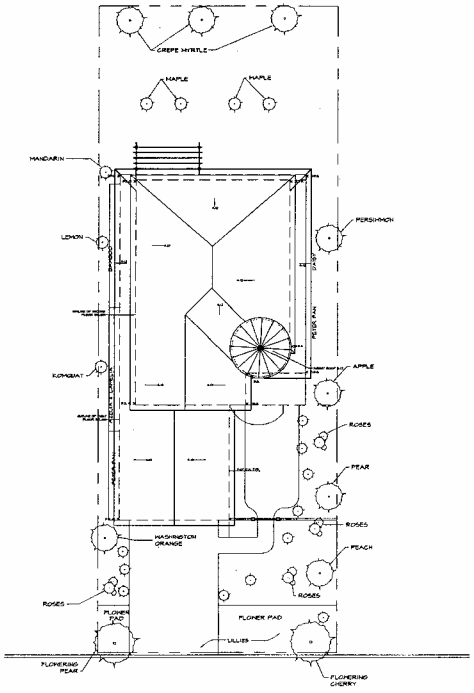

PROPOSED LANDSCAPE PLAN
SCALE: 1/8" = 1'-0"

SCALE: 1/8" = 1'-0"

REVISIONS	BY

LANDSCAPING

LOH RESIDENC
687 CONWAY
SUNNYVALE, C. 87

DRAWN
CHRIS TILEY
CHECKED
GARY CATES
DATE
11/24/03
SCALE
1/8" = 1'-0"
JOB NO.
00066
SHEET
A.5

ATTACHMENT 3
Page 6 of 6