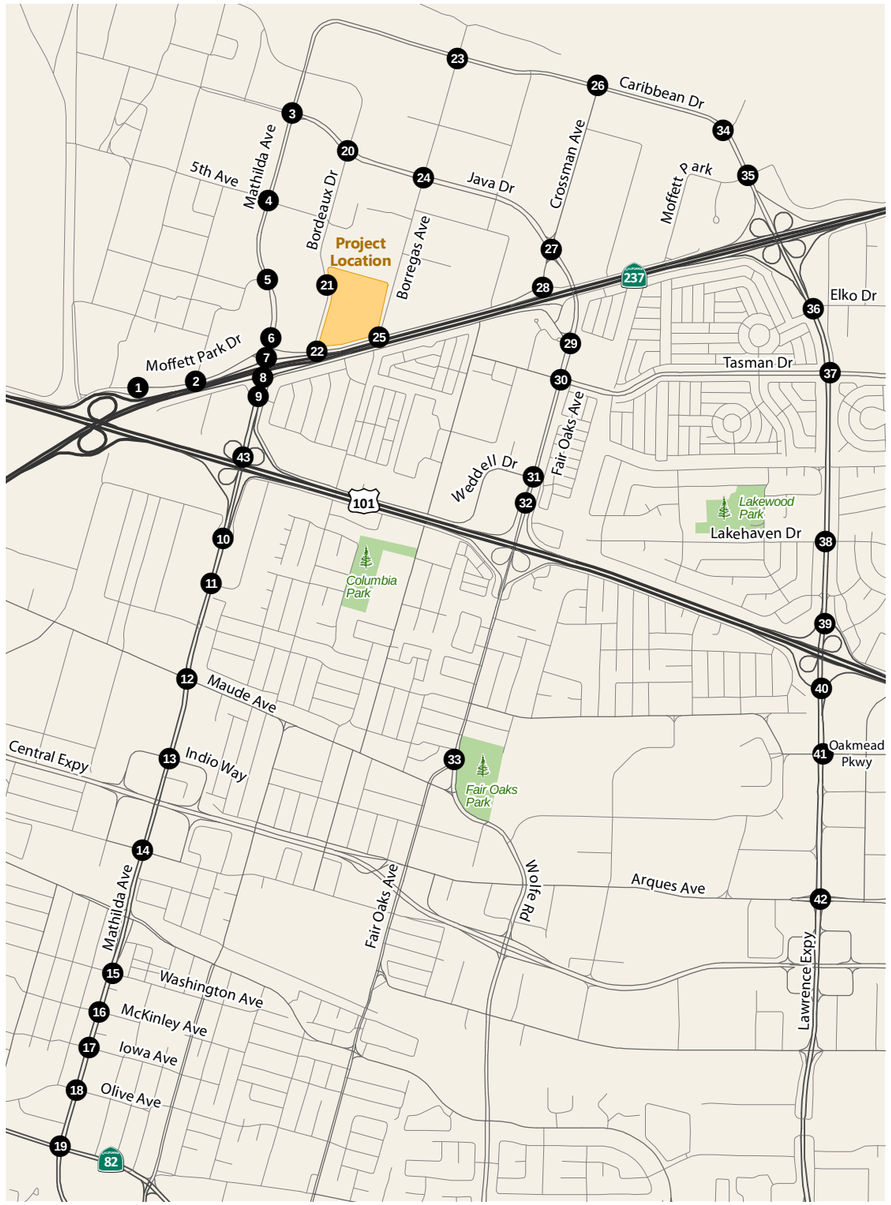

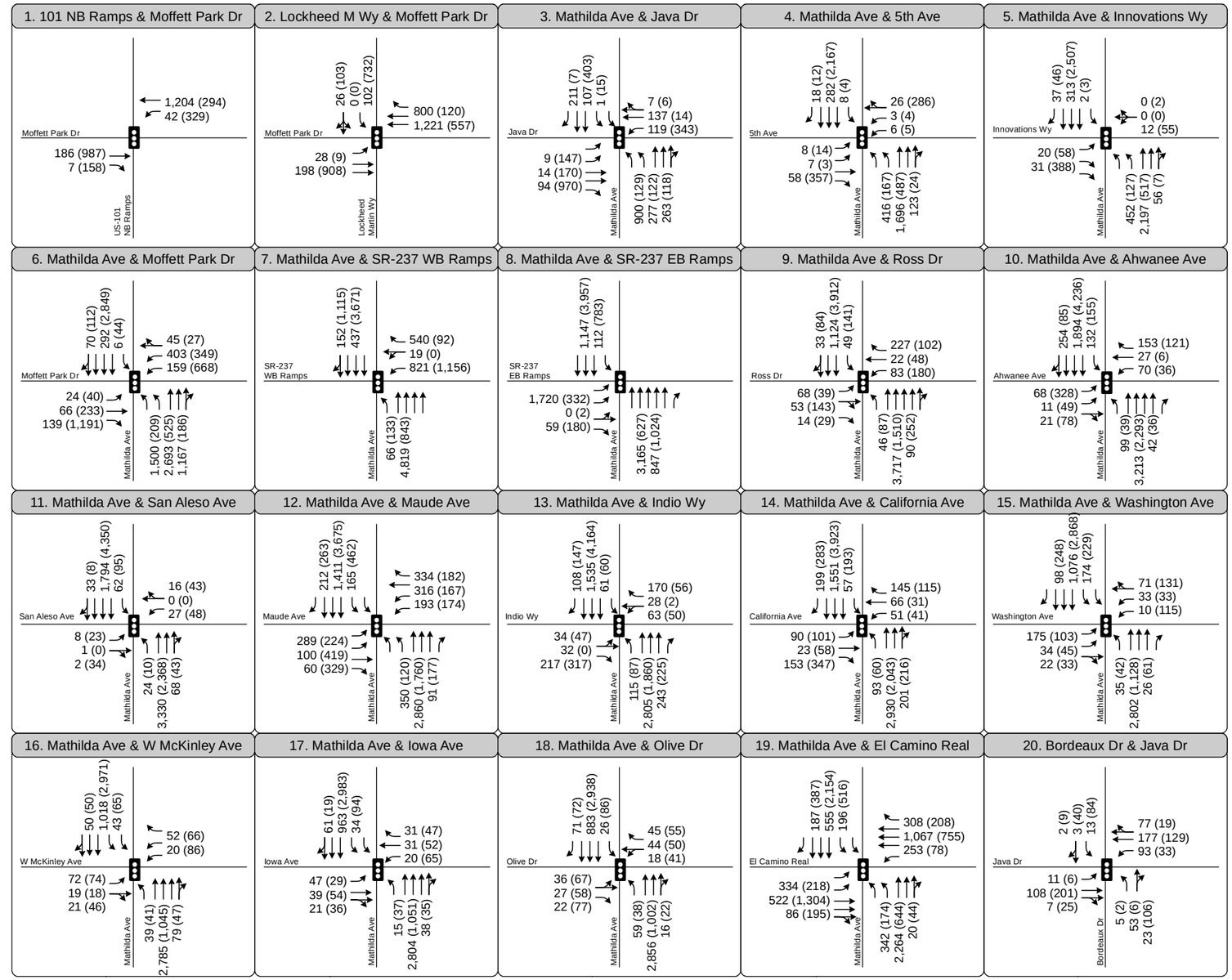

Turn Lane
AM (PM) Peak Hour Traffic Volume
Study Intersection
Traffic Signal
Stop Sign

Figure 11.

Peak Hour Traffic Volumes and Lane Configurations - Background Plus Project Conditions

FEHR PEERS

Document Path: N:\Projects_SJ13_Projects\SJ13_1423_Moffett_Place_TIA\Graphics\GIS\MXD\f10_bgpp_1thru20.mxd

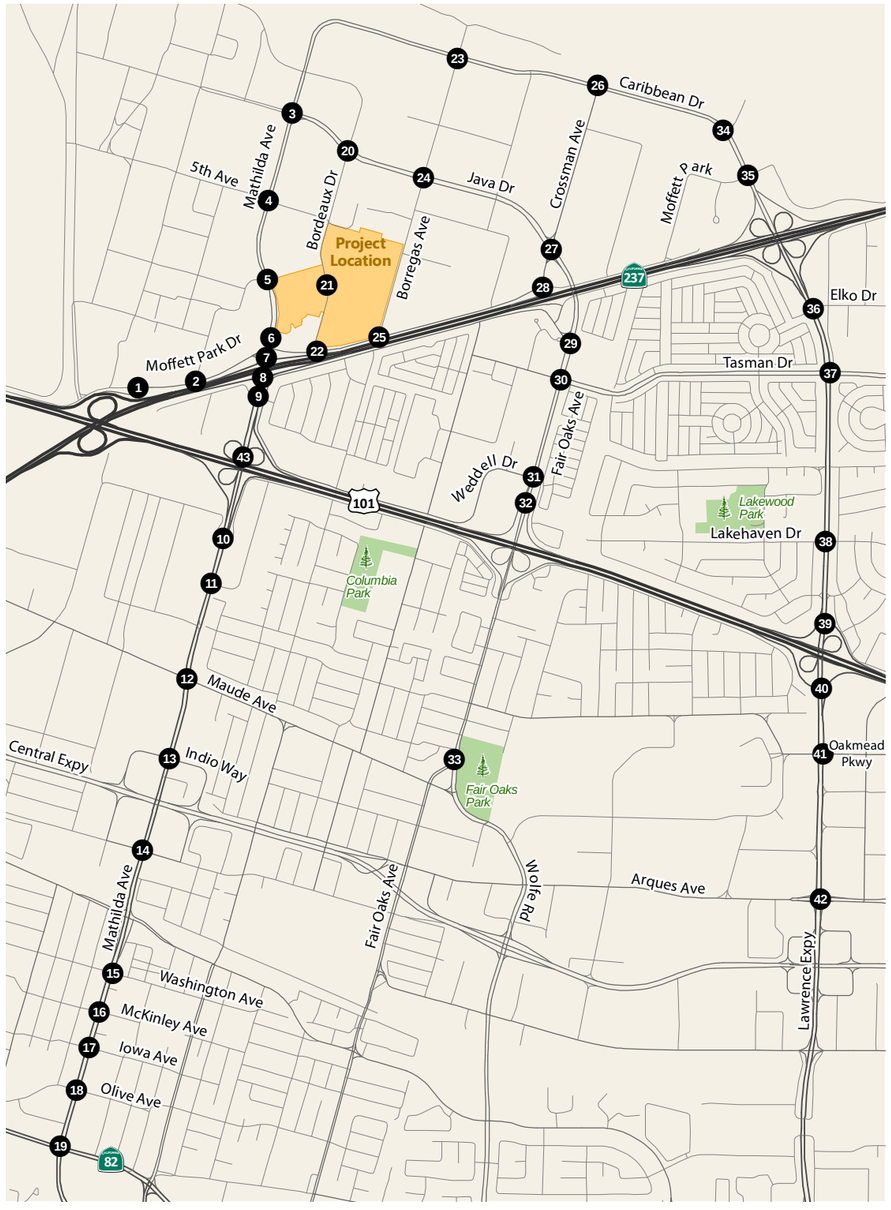

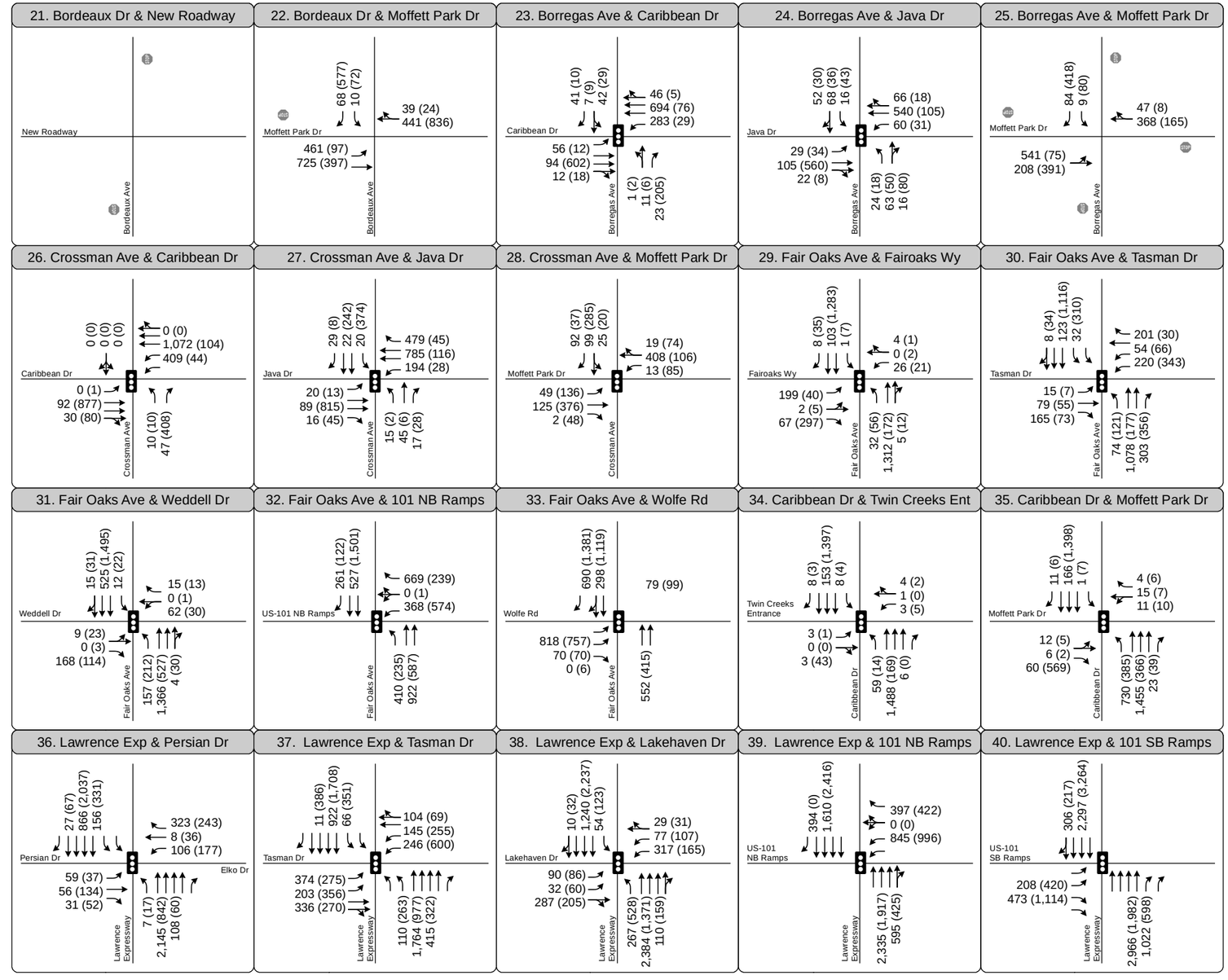

Turn Lane
AM (PM) Peak Hour Traffic Volume
Study Intersection
Traffic Signal
Stop Sign

Figure 11.

Peak Hour Traffic Volumes and Lane Configurations - Background Plus Project Conditions

FEHR PEERS

Document Path: N:\Projects_SJ13_Projects\SJ13_1423_Moffett_Place_TIA\Graphics\GIS\MXD\f10_bgpp_21thru40.mxd

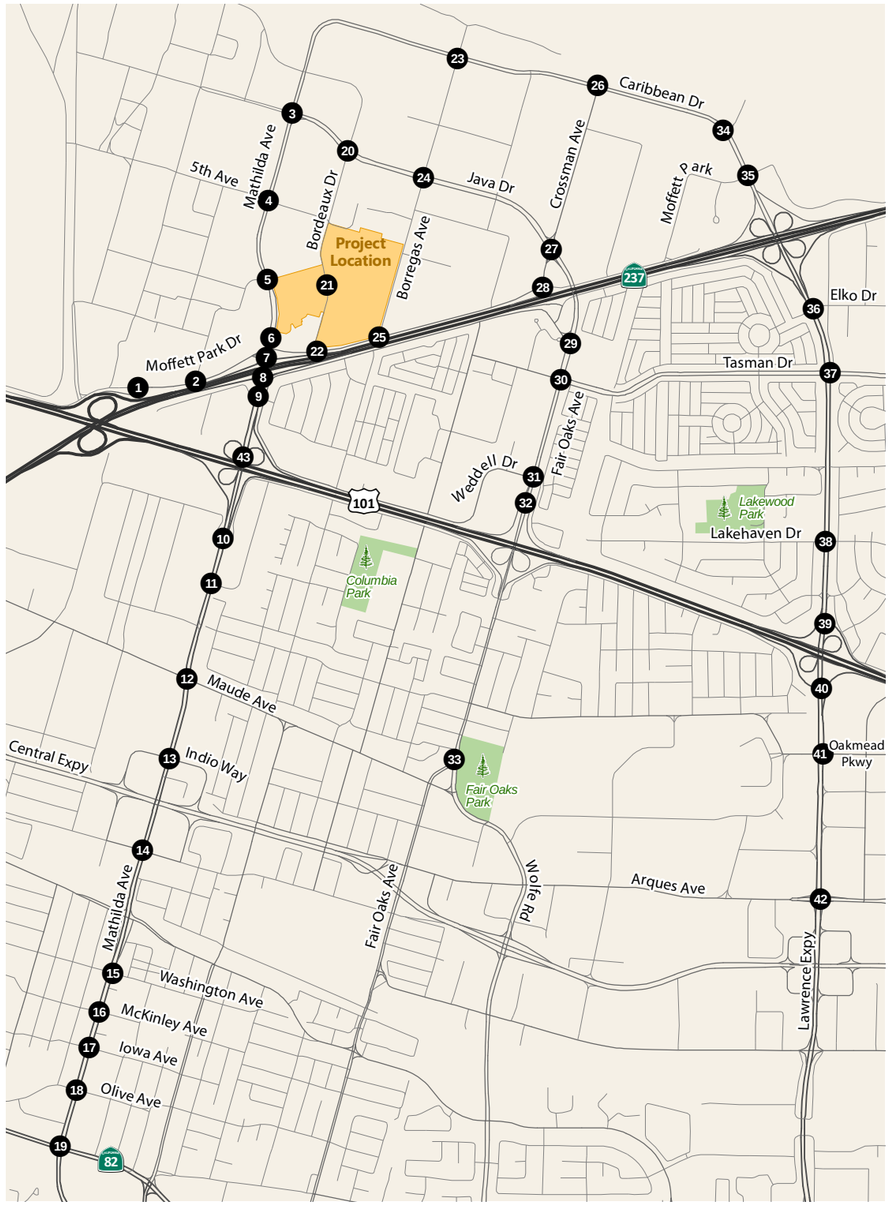

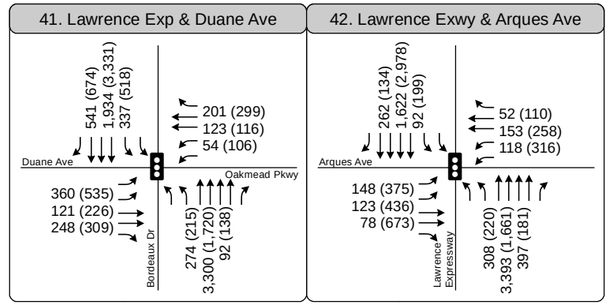

Turn Lane
AM (PM) Peak Hour Traffic Volume
Study Intersection
Traffic Signal
Stop Sign

Figure 11.

Peak Hour Traffic Volumes and Lane Configurations - Background Plus Project Conditions

FEHR PEERS

Document Path: N:\Projects_SJ13_Projects\SJ13_1423_Moffett_Place_TIA\Graphics\GIS\MXD\f10_bgpp_41thru43.mxd

TABLE 10
BACKGROUND AND BACKGROUND PLUS PROJECT INTERSECTION LEVELS OF SERVICE

Intersection		Peak Hour[1]	Inter-section Control	Background Conditions		Background plus Project Conditions				
				Delay[2]	LOS[3]	Delay[2]	LOS[3]	· in Crit. V/C[4]	· in Crit. Delay[5]	Signal Warrant Met?[6]
1	Northbound US 101 Ramps/Moffett Park Drive	AM	Signal	3.0	A	3.2	A	0.000	0.0	N/A
		PM		8.6	A	12.0	B	0.065	4.3	N/A
2	Lockheed Martin Way/Moffett Park Drive	AM	Signal	6.6	A	6.6	A	0.000	0.0	N/A
		PM		15.1	B	14.7	B	0.032	1.1	N/A
3	Mathilda Avenue/Java Drive*	AM	Signal	20.9	C+	20.9	C+	0.001	0.0	N/A
		PM		**137.5**	**F**	**136.7**	**F**	0.000	0.0	N/A
4	Mathilda Avenue/5th Avenue**	AM	Signal	13.6	B	13.6	B	0.001	0	N/A
		PM		30.8	C	30.6	C	0.000	0.0	N/A
5	Mathilda Avenue/Innovation Way**	The Mathilda Avenue study intersections between Innovation Way and Ahwanee Avenue are discussed in more detail in Chapter 6 of this report.								
6	Mathilda Avenue/Moffett Park Drive**									
7	Mathilda Ave/Westbound SR 237 Ramps**									
8	Mathilda Ave/Eastbound SR 237 Ramps**									
9	Mathilda Avenue/Ross Drive**									
10	Mathilda Avenue/Ahwanee Avenue**									
11	Mathilda Avenue/San Aleso Avenue**	AM	Signal	8.4	A	8.6	A	0.027	0.4	N/A
		PM		8.4	A	8.6	A	0.028	0.4	N/A
12	Mathilda Avenue/Maude Avenue*	AM	Signal	30.9	C	33.3	C-	0.028	4.0	N/A
		PM		32.6	C-	34.7	C-	0.016	3.4	N/A
13	Mathilda Avenue/Indio Way**	AM	Signal	13.7	B	14.0	B	0.018	0.4	N/A
		PM		58.0	E+	63.5	E	0.018	8.2	N/A
14	Mathilda Avenue/California Ave**	AM	Signal	18.1	B-	18.9	B-	0.027	1.3	N/A
		PM		53.4	D-	58.0	E+	0.015	6.9	N/A

TABLE 10
BACKGROUND AND BACKGROUND PLUS PROJECT INTERSECTION LEVELS OF SERVICE

15	Mathilda Avenue/Washington Avenue**	AM	Signal	20.2	C+	20.8	C+	0.020	0.9	N/A
		PM		20.5	C+	21.2	C+	0.013	1.1	N/A
16	Mathilda Avenue/West McKinley Avenue**	AM	Signal	13.8	B	14.0	B	0.017	0.3	N/A
		PM		17.4	B	17.9	B	0.022	0.8	N/A
17	Mathilda Avenue/Iowa Avenue**	AM	Signal	12.7	B	12.7	B	0.007	0.1	N/A
		PM		16.6	B	17.0	B	0.019	0.6	N/A
18	Mathilda Avenue/Olive Drive**	AM	Signal	10.3	B+	10.3	B+	0.010	0.1	N/A
		PM		12.3	B	12.4	B	0.010	0.2	N/A
19	Mathilda Avenue/El Camino Real*	AM	Signal	45.1	D	47.5	D	0.011	3.2	N/A
		PM		37.6	D+	40.1	D	0.012	4.3	N/A
20	Bordeaux Drive/ Java Drive	AM	Signal	16.0	B	16.7	B	0.006	0.4	N/A
		PM		18.7	B-	19.2	B-	0.032	0.5	N/A
21	Bordeaux Drive/New Roadway (future)	AM	SSSC	N/A	N/A	11.0	B	N/A	N/A	No
		PM		N/A	N/A	10.0	A	N/A	N/A	No
22	Bordeaux Drive /Moffett Park Drive	AM	SSSC	30.7	D	**130.7**	**F**	N/A	N/A	No
		PM		17.6	B	47.8	E	N/A	N/A	Yes
23	Borregas Avenue/Caribbean Drive**	AM	Signal	13.4	B	13.3	B	0.022	-0.2	N/A
		PM		13.8	B	14.3	B	0.027	0.7	N/A
24	Borregas Avenue/Java Drive	AM	Signal	15.9	B	16.2	B	0.033	0.5	N/A
		PM		16.0	B	16.6	B	0.034	0.7	N/A
25	Borregas Avenue/Moffett Park Drive	AM	SSSC	28.3	D	**95.7**	**F**	0.207	2.4	No
		PM		14.4	B	16.7	C	0.252	2.5	Yes
26	Crossman Avenue/Caribbean Drive**	AM	Signal	6.6	A	6.7	A	0.000	0.2	N/A
		PM		18.0	B-	18.1	B-	0.005	0.1	N/A
27	Crossman Avenue/Java Drive	AM	Signal	13.0	B	13.1	B	0.011	0.0	N/A
		PM		24.5	C	25.2	C	0.016	1.1	N/A
28	Crossman Avenue/Moffett Park Drive	AM	Signal	13.2	B	13.4	B	0.025	-0.1	N/A
		PM		16.5	B	16.7	B	0.024	0.2	N/A
29	Fair Oaks Avenue/Fair Oaks Way	AM	Signal	18.3	B-	18.6	B-	0.022	0.4	N/A
		PM		25.5	C	26.4	C	0.022	1.1	N/A
30	Fair Oaks Avenue/Tasman Drive	AM	Signal	16.7	B	17.0	B	0.014	0.3	N/A
		PM		18.6	B-	18.7	B-	0.011	0.1	N/A

TABLE 10
BACKGROUND AND BACKGROUND PLUS PROJECT INTERSECTION LEVELS OF SERVICE

31	Fair Oaks Avenue/East Weddell Drive	AM	Signal	15.3	B	15.2	B	0.007	-0.2	N/A
		PM		21.4	C+	21.6	C+	0.012	0.3	N/A
32	Fair Oaks Ave/Northbound US 101 Ramps	AM	Signal	17.3	B	17.3	B	0.002	0.1	N/A
		PM		26.1	C	26.7	C	0.008	1.2	N/A
33	Fair Oaks Avenue/Wolfe Road	AM	Signal	13.0	B	13.0	B	0.012	0.1	N/A
		PM		11.5	B+	11.5	B+	0.01	0.1	N/A
34	Twin Creeks Entrance/ Caribbean Drive**	AM	Signal	8.8	A	8.8	A	0.006	0.0	N/A
		PM		10.1	B+	10.1	B+	0.007	0.0	N/A
35	Moffett Park Drive/Caribbean Drive**	AM	Signal	15.9	B	16.0	B	0.013	0.4	N/A
		PM		16.0	B	16.2	B	0.009	0.1	N/A
36	Lawrence Expressway/Persian Drive-Elko Drive**	AM	Signal	21.1	C+	24.4	C	0.009	-0.1	N/A
		PM		19.4	B-	19.5	B-	0.009	0.1	N/A
37	Lawrence Expressway/Tasman Drive*	AM	Signal	46.9	D	47.1	D	0.000	0.0	N/A
		PM		58.2	E+	58.7	E+	0.012	0.7	N/A
38	Lawrence Expressway/Lakehaven Drive**	AM	Signal	49.6	D	49.3	D	0.008	-0.2	N/A
		PM		55.8	E+	56.3	E+	0.013	0.7	N/A
39	Lawrence Expressway/NB US 101 Ramps**	AM	Signal	14.8	B	14.8	B	0.008	0.0	N/A
		PM		17.7	B	17.3	B	0.005	-0.1	N/A
40	Lawrence Expressway/SB US 101 Ramps**	AM	Signal	12.9	B	12.8	B	0.009	0.0	N/A
		PM		21.5	C+	21.6	C+	0.014	0.3	N/A
41	Lawrence Expressway/Duane Avenue/Oakmead Parkway**	AM	Signal	36.6	D+	36.6	D+	0.008	-0.1	N/A
		PM		46.5	D	47.2	D	0.001	-0.1	N/A
42	Lawrence Expressway/Arques Avenue*	AM	Signal	28.5	C	28.8	C	0.002	0.0	N/A
		PM		44.9	C	45.1	D	0.006	0.2	N/A

Notes:
Bold font indicates unacceptable operations based on City of Sunnyvale and VTA's LOS standards. **Bold and highlighted** indicates significant impacts.
[1] AM = morning peak hour, PM = afternoon peak hour.
[2] Whole intersection weighted average control delay expressed in seconds per vehicle for signalized and all-way stop controlled intersections. Signalized intersections include adjusted saturation flow rates to reflect Santa Clara County Conditions per VTA guidelines. Total control delay for the worst movement is presented for side-street stop-controlled intersections
[3] LOS = Level of Service. LOS calculations conducted using the TRAFFIX level of service analysis software package, which applies the methodology described in the *2000 HCM*.
[4] Change in the critical volume-to-capacity ratio (V/C) between Existing and Project Conditions.
[5] Change in critical movement delay between Existing and Project Conditions.
[6] Signal warrant based CA MUTCD Warrant 3, Peak Hour (Urban Area)
* CMP intersection with LOS E threshold.
** Regionally significant intersection with LOS E threshold.
Source: Fehr & Peers, August 2013.

Some of the study intersections show a reduction in average delay with the addition of project traffic, which is counter-intuitive. The average delay values in the table are weighted averages. Weighted average delays will be reduced when traffic is added to a movement with a low delay, such as the through movements in the non-peak direction on Mathilda Avenue.[4] Conversely, relatively small volume increases to movements with high delays can substantially increase the weighted average delay.

SIGNALIZED INTERSECTIONS

Under Background plus Project Conditions the following signalized intersection is projected to operate at unacceptable service levels (LOS E/F for City intersections and LOS F for regionally significant and CMP intersections) during the identified peak hours.

Int. 3. Mathilda Avenue/Java Drive: the addition of project traffic exacerbates unacceptable LOS F operations during the PM peak hour.

UNSIGNALIZED INTERSECTIONS

Under Background plus Project Conditions, the following unsignalized intersection is projected to operate at unacceptable service levels (LOS F) during the identified peak hours.

Int. 22. Bordeaux Drive/Moffett Park Drive: during the AM peak hour the addition of project traffic degrades intersection operation from acceptable LOS D to unacceptable LOS F. The MUTCD peak hour warrant is not met during the AM peak hour, but is met during the PM peak hour.

Int. 25. Borregas Avenue/Moffett Park Drive: during the AM peak hour the addition of project traffic degrades intersection operation from acceptable LOS D to unacceptable LOS F. The MUTCD peak hour warrant is not met during the AM peak hour, but is met during the PM peak hour.

The remaining unsignalized intersections are projected to operate at acceptable LOS. **Appendix D** contains the peak-hour signal warrants.

BACKGROUND INTERSECTION IMPACTS AND MITIGATION MEASURES

This section of the report evaluates the intersection LOS results presented in **Table 10** against the City of Sunnyvale's and VTA's criteria for significant impacts and presents mitigation measures for identified impacts. Peak hour LOS calculation worksheets including the recommended mitigation measures are provided in **Appendix E**.

INT. 3. MATHILDA AVENUE/JAVA DRIVE

During the PM peak hour, the addition of project traffic is projected to exacerbate unacceptable LOS F operations at the Mathilda Avenue/Java Drive intersection. However, the critical delay is not projected to increase by more than four seconds (0 seconds) and the critical V/C ratio is not projected to increase by more

[4] For example, if you have one movement with 10 vehicles with a delay of 100 seconds and another movement with 400 vehicles and 10 seconds of delay, the weighted average delay is calculated as (100 seconds X 10 vehicles + 10 seconds X 400 vehicles) /410 vehicles = 12.2 seconds per vehicle. Now if you add 100 vehicles to the movement with 10 seconds of delay, the weight average is calculated as (100 seconds X 10 vehicles + 10 seconds X 500 vehicles)/510 vehicles = 11.8 seconds per vehicle. The weighted average delay improves, even though more vehicles are added.

than 0.01 (0.000) between the Background No Project and Background plus Project scenarios; therefore the project is considered to have a **less-than-significant** impact at the Mathilda Avenue/Java Drive intersection based on Sunnyvale's impact criteria and no mitigation measures are identified.

The Mathilda Avenue/Java Drive intersection actually shows a reduction in average delay with the addition of project traffic, which is counter-intuitive. The average delay values in the table are weighted averages. Weighted average delays will be reduced when traffic is added to a movement with a low delay, such as the northbound through and right-turn movements at the Mathilda Avenue/Java Drive intersection.

INT. 22. BORDEAUX DRIVE/MOFFETT PARK DRIVE

Under Background plus Project Conditions the Bordeaux Drive/Moffett Park Drive intersection is projected to operate at unacceptable LOS F during the AM peak hour; however, is not projected to meet the MUTCD peak hour signal warrant volume threshold. In the PM peak hour, the intersection is projected to operate at acceptable LOS E and is projected to meet the MUTCD peak hour signal warrant volume thresholds. While the intersection operates at an unacceptable LOS during the AM peak hour and meets the peak hour volume signal warrant during the PM peak hour, the intersection does not meet the both impact thresholds (LOS F and peak hour signal warrant) during either the AM and PM peak hours. Therefore, based on the City of Sunnyvale's intersection threshold, the Bordeaux Drive/Moffett Park Drive intersection would have a **less-than-significant** impact.

It should be noted that during the AM peak hour, the worst movement for this side-street stop controlled intersection is the southbound left-turn lane (LOS F with 130.7 seconds of delay), which is projected to have 10 vehicles; thus the LOS F operations only applies to those 10 vehicles. The total delay for the southbound approach (combined southbound left-turns and right-turn movement) is projected to be 26.8 seconds of delay (LOS D). In the PM peak hour, the worst movement is the southbound right-turn lane (LOS E with 47.8 seconds of delay), which is projected to carry 400 vehicles. The total delay for the southbound approach (combined southbound left-turns and right-turn movement) is projected to be 45.6 seconds of delay (LOS E).

INT. 25. BORREGAS AVENUE/MOFFETT PARK DRIVE

Under Background plus Project Conditions the Borregas Avenue/Moffett Park Drive intersection is projected to operate at unacceptable LOS F during the AM peak hour; however, is not projected to meet the MUTCD peak hour signal warrant volume threshold. In the PM peak hour, the intersection is projected to operate at acceptable LOS E and is projected to meet the MUTCD peak hour signal warrant volume thresholds. While the intersection operates at an unacceptable LOS during the AM peak hour and meets the peak hour volume signal warrant during the PM peak hour, the intersection does not meet the both impact thresholds (LOS F and peak hour signal warrant) during either the AM and PM peak hours. Therefore, based on the City of Sunnyvale's intersection threshold, the Borregas Avenue/Moffett Park Drive intersection would have a **less-than-significant** impact.

It should be noted that during the AM peak hour, the worst movement for this side-street stop controlled intersection is the southbound left-turn lane (LOS F with 95.7 seconds of delay), which is projected to have 9 vehicles; thus the LOS F operations only applies to those 9 vehicles. The total delay for the southbound approach (combined southbound left-turns and right-turn movement) is projected to be 19.4 seconds of delay (LOS C). In the PM peak hour, the worst movement is the southbound right-turn lane (LOS C with 16.7

seconds of delay), which is projected to carry 80 vehicles. The total delay for the southbound approach (combined southbound left-turns and right-turn movement) is projected to be 13.4 seconds of delay (LOS B).

It should be noted that with the proposed realignment of the SR 237 WB/Moffett Park Drive off-ramp, recommended to mitigate the impacts at the Mathilda Avenue intersections with Moffett Park Drive and the SR 237 Westbound Ramps (intersections #6 & #7), will require the closure of Moffett Park Drive between Mathilda Avenue and Bordeaux Drive. This closure will eliminate the eastbound approach of the Bordeaux Drive/Moffett Park Drive intersection, thus removing all conflict points and eliminating the entire intersection. Therefore, if the proposed off-ramp realignment is implemented no additional improvements would be required at this intersection.

5. CUMULATIVE CONDITIONS

This chapter provides a long-term projection (Year 2035) of the traffic operations within the project study area and summarizes the potential long-term transportation related impacts associated with the proposed project. Intersection level of service calculations and results are provided for Cumulative Conditions with and without the project.

CUMULATIVE NO PROJECT TRAFFIC VOLUMES

Traffic volumes under Cumulative No Project Conditions are based on peak hour forecasts generated by the City's Year 2035 Transportation Demand Model, assuming the planned land uses contained in the current General Plan. Forecast volumes were then manually adjusted based on the projected traffic and development patterns observed under both Existing and Background Conditions. **Figure 11** displays the projected Cumulative No Project traffic volumes.

CUMULATIVE IMPROVEMENTS

The City's TIF and VTA's VTP 2035 include the reconfiguration of the SR 237/Mathilda Avenue ramp intersection in their lists of projects. This is a funded project that is currently under design evaluation by VTA. The 2006 *SR 237 Corridor Study* includes specific realignment recommendations for the interchange; however, the ultimate configuration of the interchange is not known and currently being evaluated by VTA. To present a conservative analysis the existing interchange configuration was used when evaluating the SR 237/Mathilda Avenue interchange. **Chapter 6** presents a detailed evaluation of the SR 237/Mathilda Avenue corridor with the existing configuration and a sensitivity analysis with the configuration recommended as part of the 2006 study.

Currently, there are no other funded transportation network improvements within the project study area and, the existing roadway network was used for the cumulative analysis.

CUMULATIVE PLUS PROJECT TRAFFIC VOLUMES

Trips generated from the proposed project (**Figure 7**) were added to the Cumulative No Project volumes on **Figure 11**. The results are shown on **Figure 12**.

CUMULATIVE INTERSECTION LEVELS OF SERVICE

Table 11 presents the level of service calculations for the study intersections under Cumulative No Project and Cumulative plus Project Conditions. **Appendix C** contains the corresponding calculation sheets.

SIGNALIZED INTERSECTIONS

Under Cumulative plus Project Conditions the following signalized intersection is projected to operate at unacceptable service levels (LOS E/F for City intersections and LOS F for regionally significant and CMP intersections) during the identified peak hours:

Int. 3. Mathilda Avenue/Java Drive: the addition of project traffic exacerbates unacceptable LOS F operations during the PM peak hour.

The Mathilda Avenue/Java Drive intersection was also projected to operate at unacceptable service levels under Background plus Project Conditions

UNSIGNALIZED INTERSECTIONS

Under Cumulative plus Project Conditions, the following unsignalized intersection is projected to operate at unacceptable service levels (LOS F) during the identified peak hours:

Int. 22. Bordeaux Drive/Moffett Park Drive: during both peak hours the addition of project traffic degrades intersection operation from acceptable LOS (LOS D in AM peak hour and LOS C in PM peak hour) to unacceptable LOS F. The MUTCD peak hour warrant is not met during the AM peak hour, but is met during the PM peak hour.

Int. 25. Borregas Avenue/Moffett Park Drive: during the AM peak hour the addition of project traffic degrades intersection operation from acceptable LOS D to unacceptable LOS F. The MUTCD peak hour warrant is not met during the AM peak hour, but is met during the PM peak hour.

The Bordeaux Drive/Moffett Park Drive and Borregas Avenue/Moffett Park Drive intersections were also projected to operate at unacceptable service levels under Background plus Project Conditions.

The remaining unsignalized intersections are projected to operate at acceptable LOS. **Appendix D** contains the peak-hour signal warrants.[5]

[5] As noted previously, the peak hour volume signal warrant analysis should not serve as the only basis for deciding whether and when to install a traffic signal.

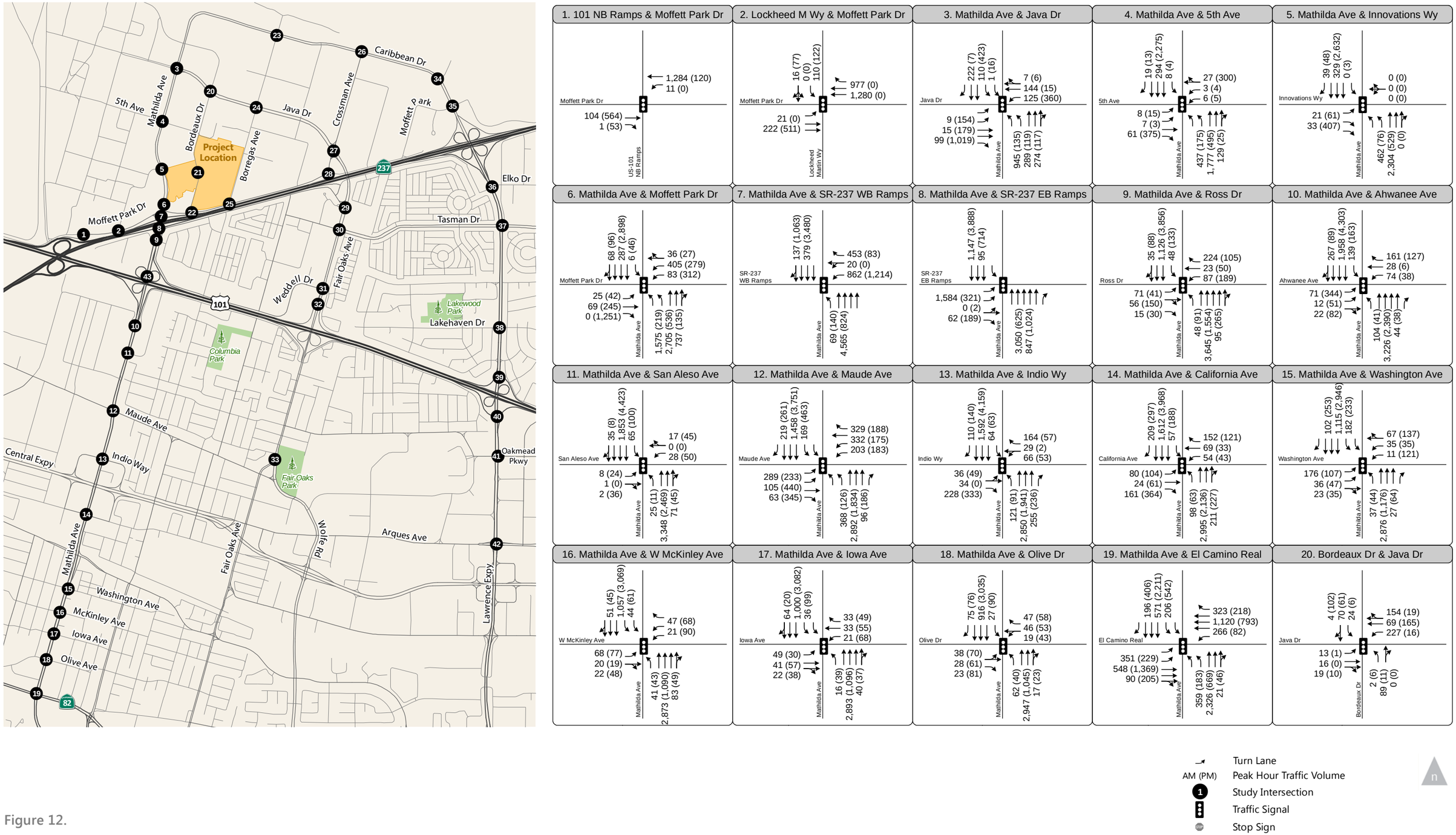

Figure 12.

Peak Hour Traffic Volumes and Lane Configurations - Cumulative No Project Conditions

FEHR PEERS

Document Path: N:\Projects_SJ13_Projects\SJ13_1423_Moffett_Place_TIA\Graphics\GIS\MXD\f11_cum_1thru20.mxd

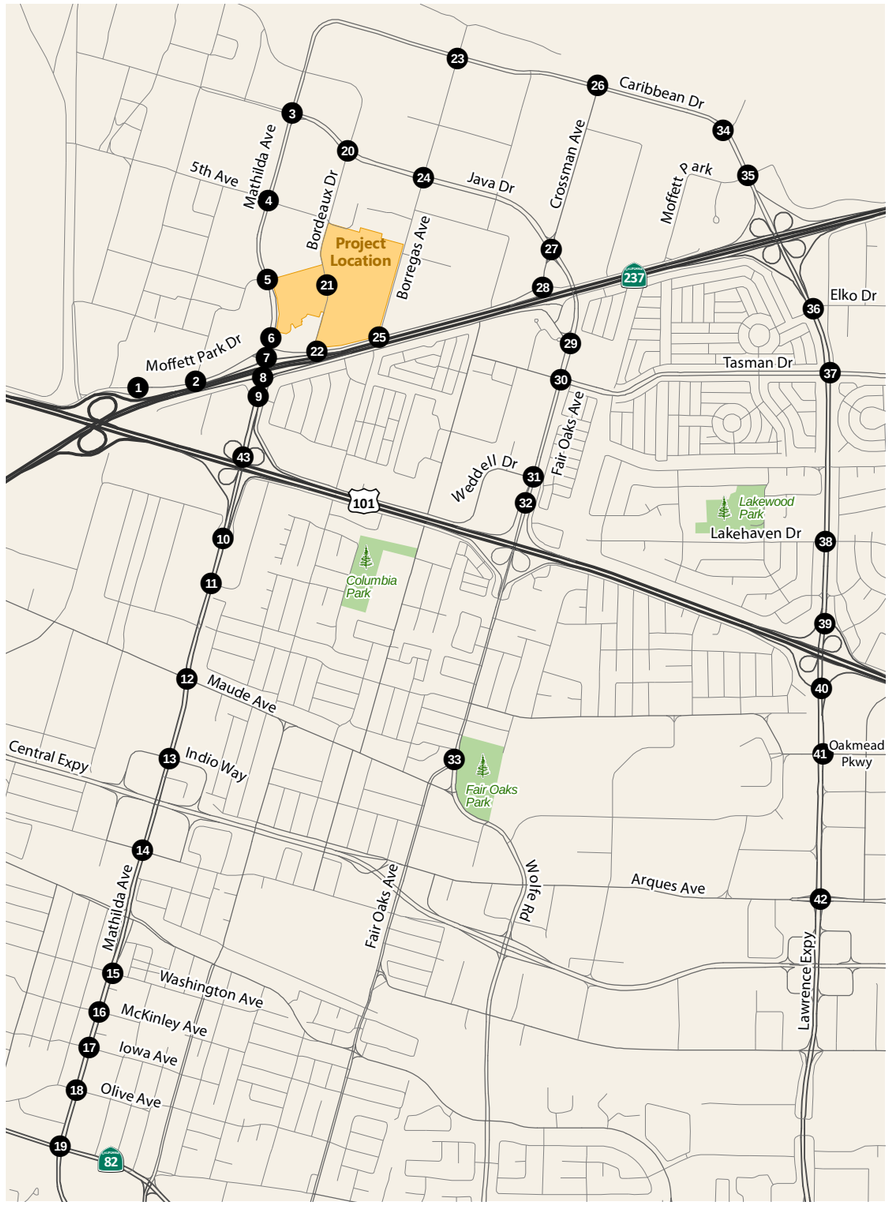

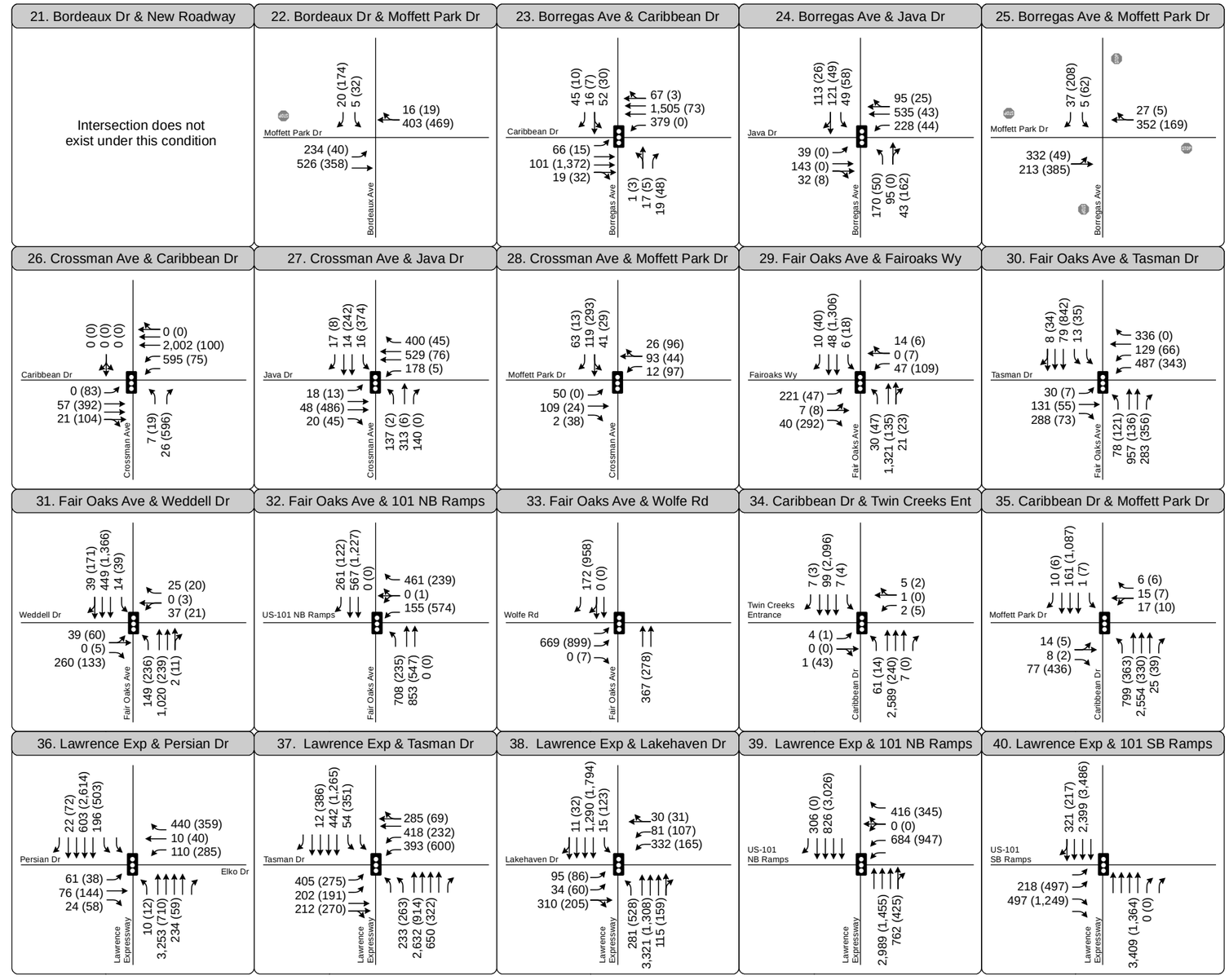

Turn Lane
AM (PM) Peak Hour Traffic Volume
Study Intersection
Traffic Signal
Stop Sign

Figure 12.

Peak Hour Traffic Volumes and Lane Configurations - Cumulative No Project Conditions

FEHR PEERS

Document Path: N:\Projects_SJ13_Projects\SJ13_1423_Moffett_Place_TIA\Graphics\GIS\MXD\f11_cum_21thru40.mxd

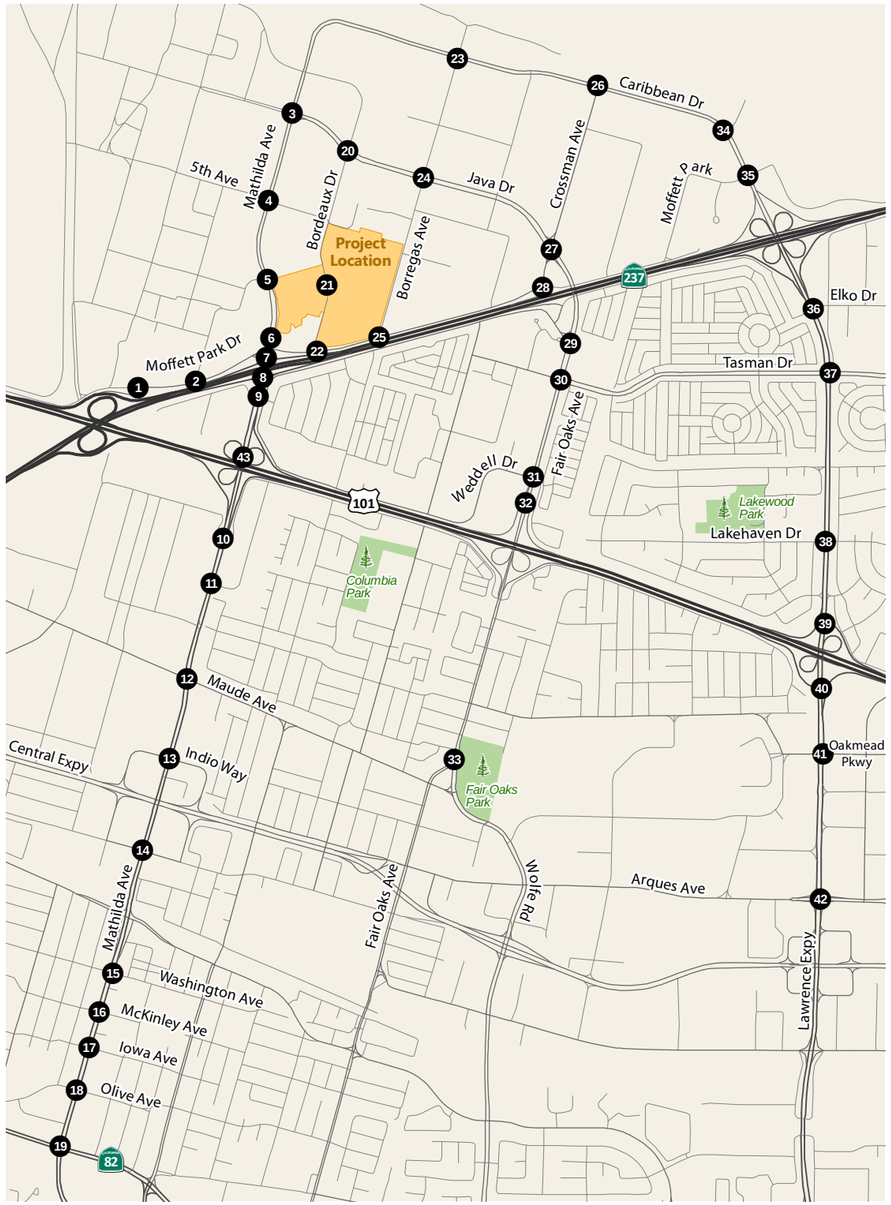

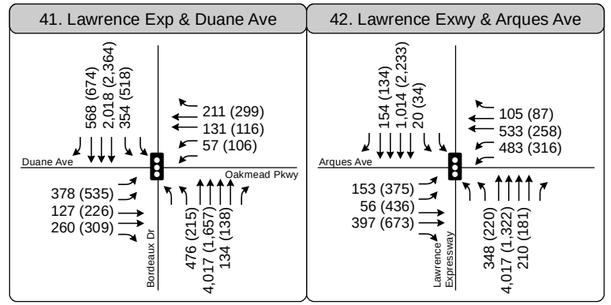

Turn Lane
AM (PM) Peak Hour Traffic Volume
Study Intersection
Traffic Signal
Stop Sign

Figure 12.

Peak Hour Traffic Volumes and Lane Configurations - Cumulative No Project Conditions

FEHR PEERS

Document Path: N:\Projects_SJ13_Projects\SJ13_1423_Moffett_Place_TIA\Graphics\GIS\MXD\f11_cum_41thru43.mxd

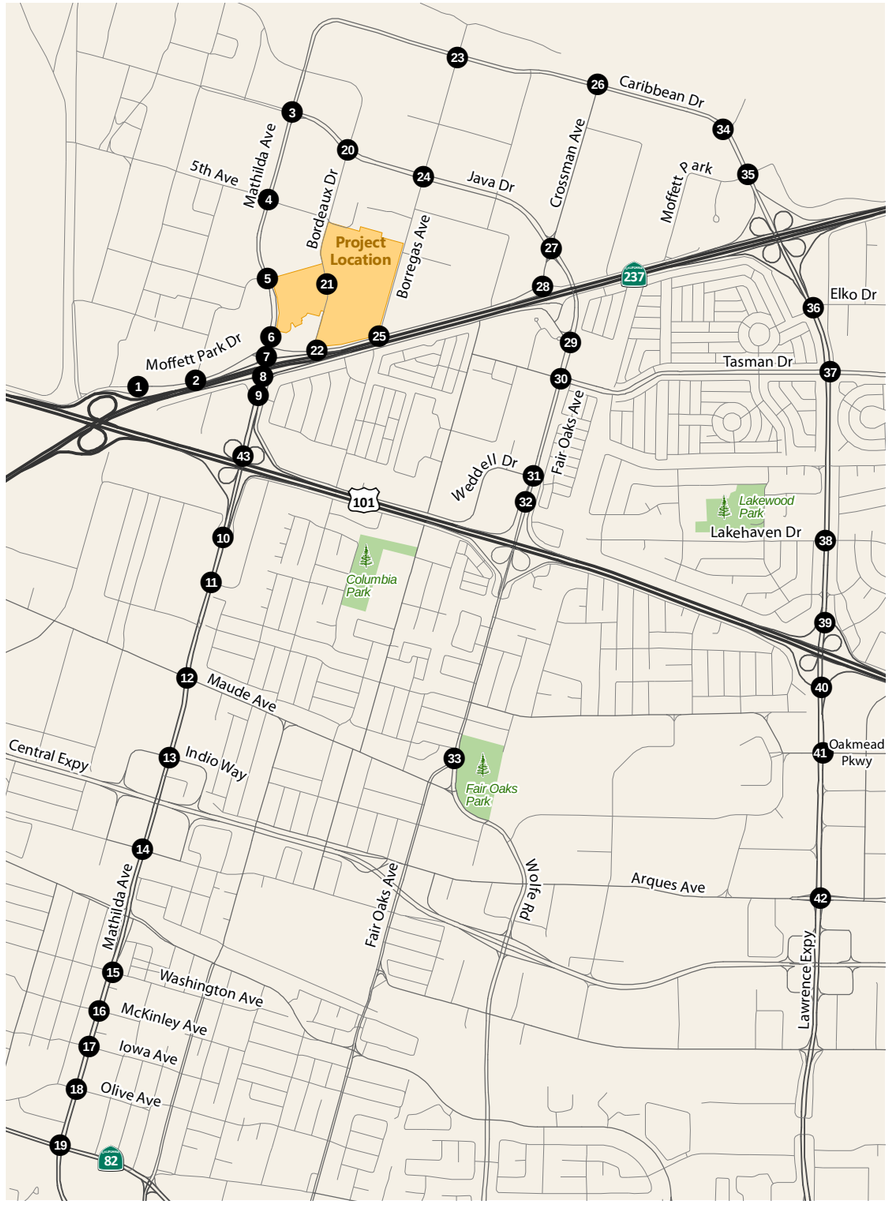

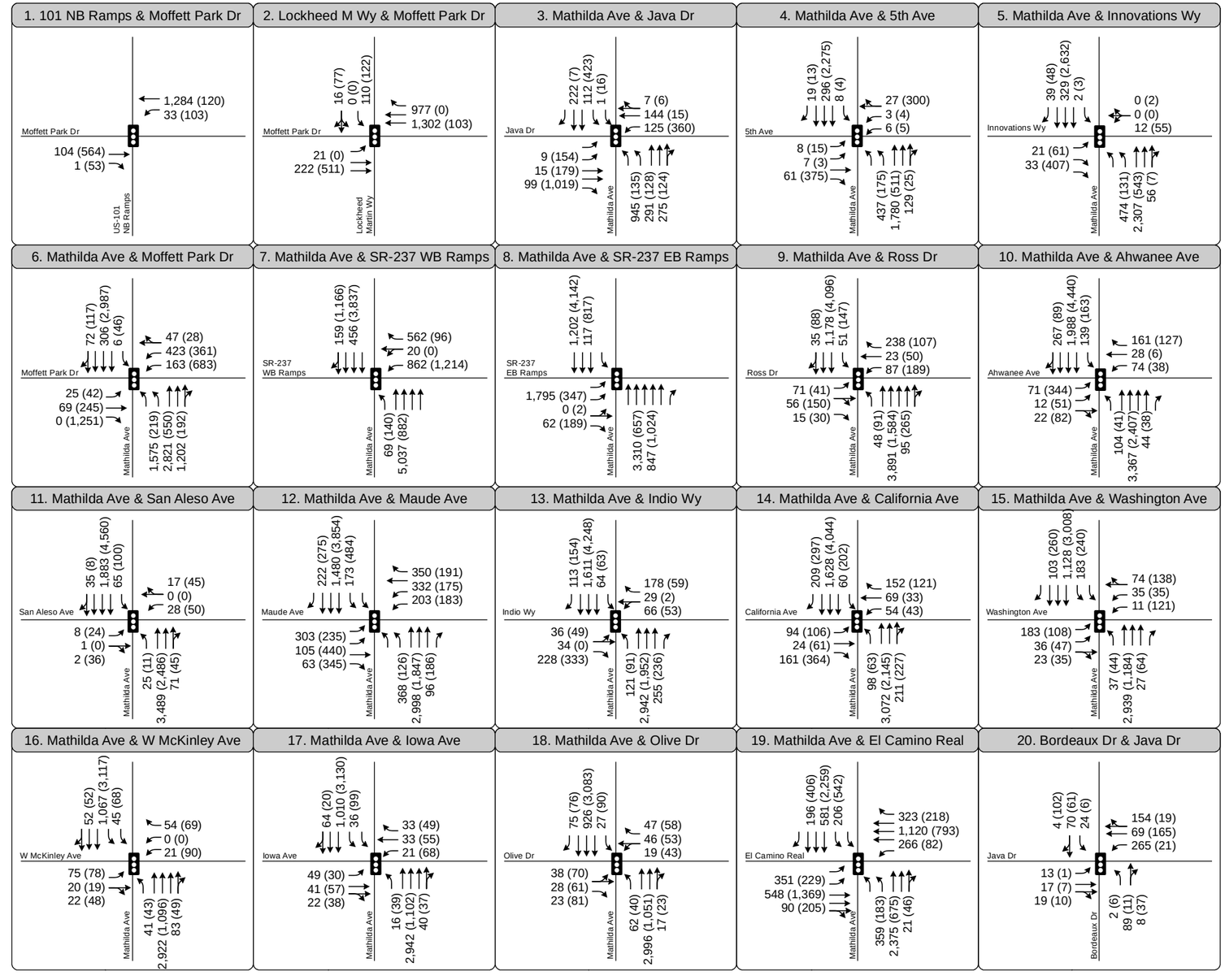

Turn Lane
AM (PM) Peak Hour Traffic Volume
Study Intersection
Traffic Signal
Stop Sign

Figure 13.

Peak Hour Traffic Volumes and Lane Configurations - Cumulative Plus Project Conditions

FEHR PEERS

Document Path: N:\Projects_SJ13_Projects\SJ13_1423_Moffett_Place_TIA\Graphics\GIS\MXD\f12_cumplus_1thru20.mxd

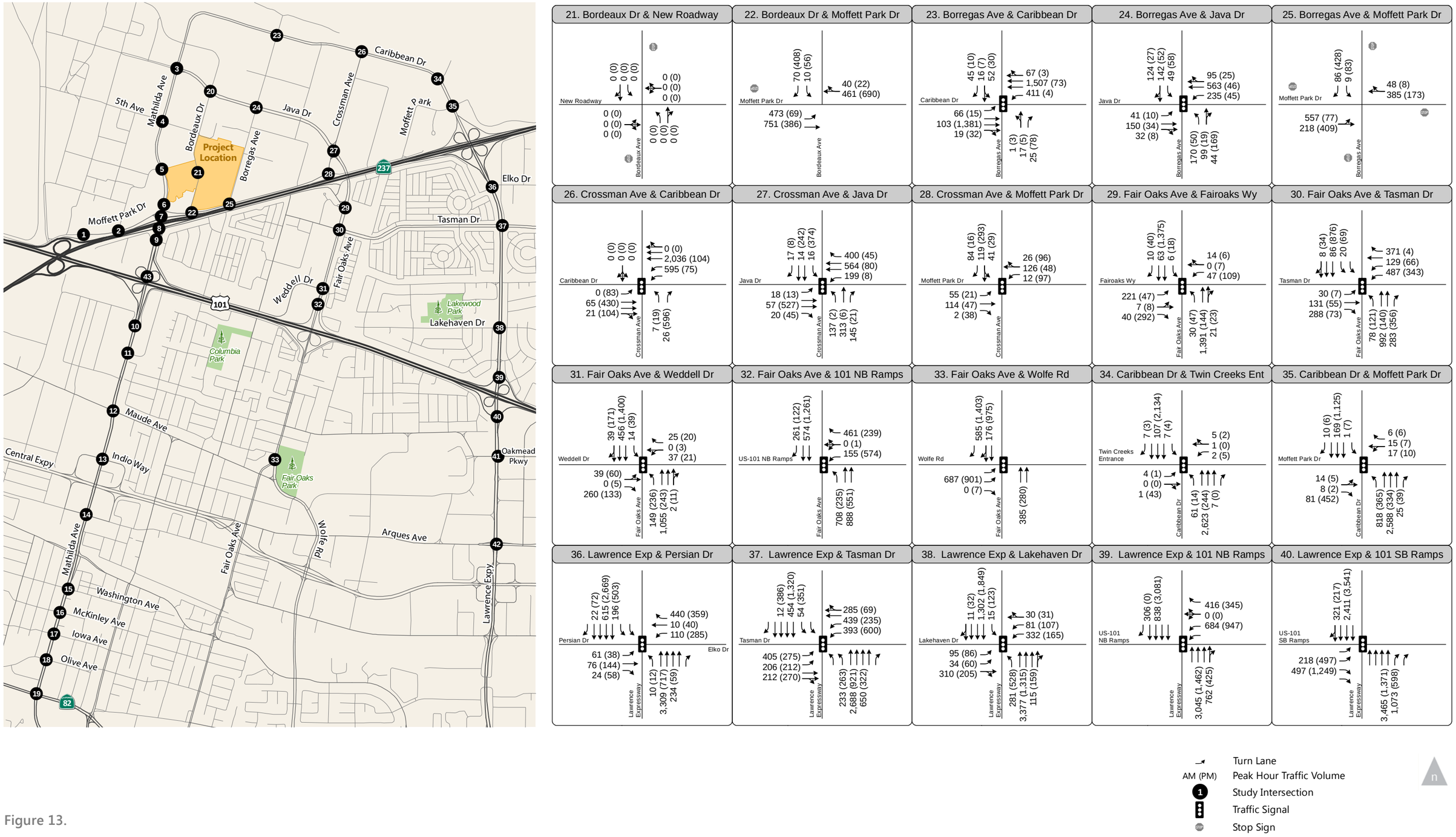

Figure 13.

Peak Hour Traffic Volumes and Lane Configurations - Cumulative Plus Project Conditions

FEHR PEERS

Document Path: N:\Projects_SJ13_Projects\SJ13_1423_Moffett_Place_TIA\Graphics\GIS\MXD\f12_cumplus_21thru40.mxd

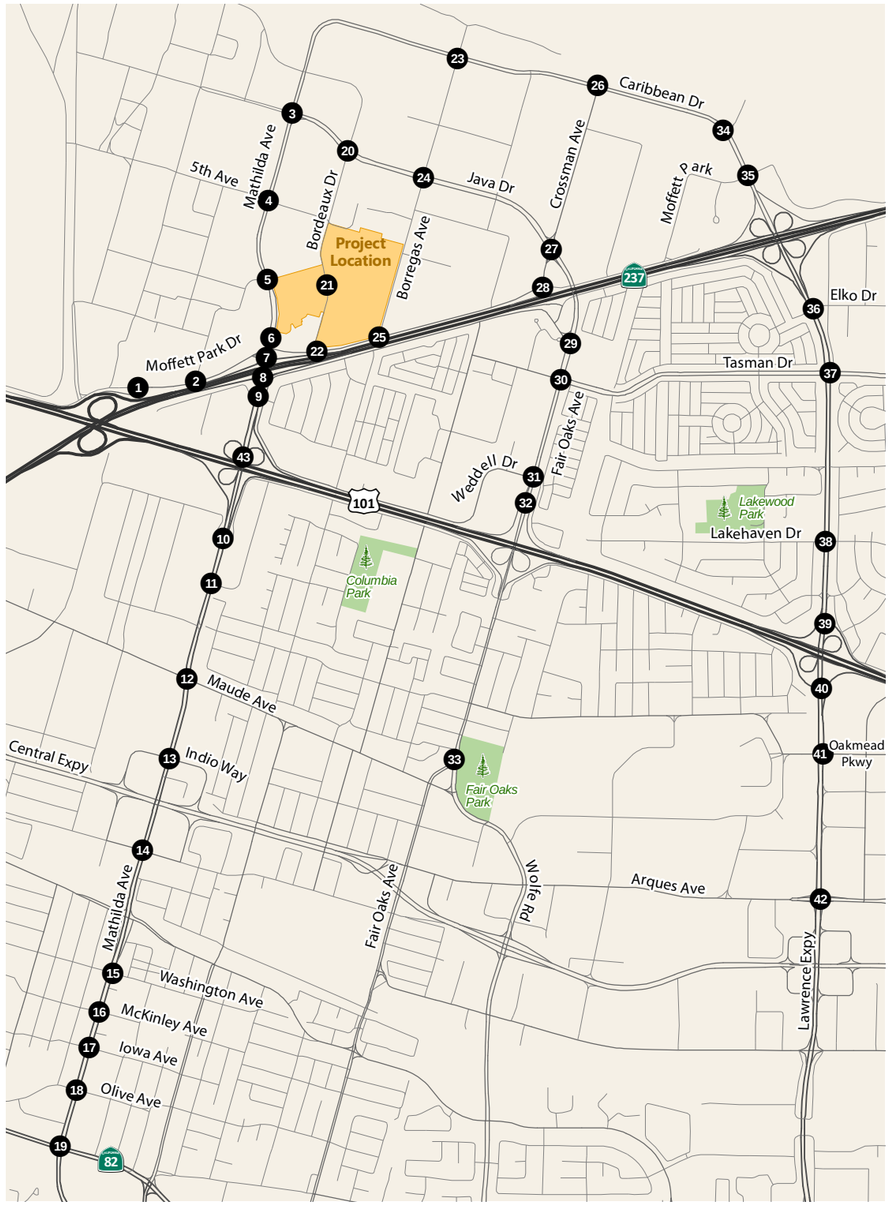

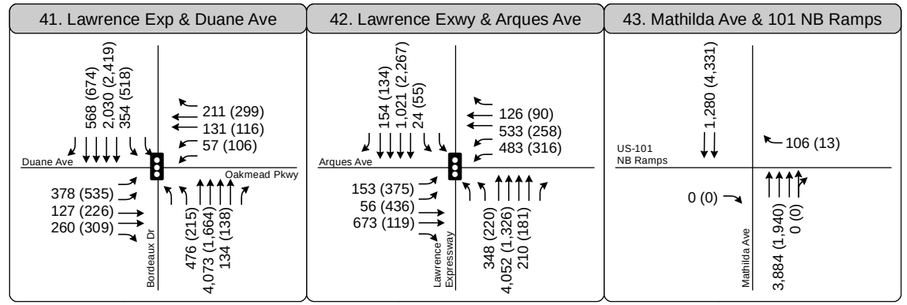

Turn Lane
AM (PM) Peak Hour Traffic Volume
Study Intersection
Traffic Signal
Stop Sign

Figure 13.

Peak Hour Traffic Volumes and Lane Configurations - Cumulative Plus Project Conditions

FEHR PEERS

Document Path: N:\Projects_SJ13_Projects\SJ13_1423_Moffett_Place_TIA\Graphics\GIS\MXD\f12_cumplus_41thru43.mxd

TABLE 11
CUMULATIVE AND CUMULATIVE PLUS PROJECT INTERSECTION LEVELS OF SERVICE

Intersection		Peak Hour[1]	Inter-section Control	Cumulative Conditions		Cumulative plus Project Conditions				
				Delay[2]	LOS[3]	Delay[2]	LOS[3]	· in Crit. V/C[4]	· in Crit. Delay[5]	Signal Warrant Met?[6]
1	Northbound US 101 Ramps/Moffett Park Drive	AM	Signal	3.2	A	3.4	A	0.000	0.0	N/A
		PM		0.5	A	5.0	A	0.065	5.6	N/A
2	Lockheed Martin Way/Moffett Park Drive	AM	Signal	6.5	A	6.5	A	0.000	0.0	N/A
		PM		9.7	A	9.3	A	0.000	0.0	N/A
3	Mathilda Avenue/Java Drive*	AM	Signal	22.0	C+	22.0	C+	0.001	0.0	N/A
		PM		**154.8**	**F**	**154.0**	**F**	0.000	0.0	N/A
4	Mathilda Avenue/5th Avenue**	AM	Signal	13.7	B	13.7	B	0.001	0.0	N/A
		PM		31.7	C	31.7	C	0.000	0.0	N/A
5	Mathilda Avenue/Innovation Way**	The Mathilda Avenue study intersections between Innovation Way and Ahwanee Avenue are discussed in more detail in Chapter 6 of this report.								
6	Mathilda Avenue/Moffett Park Drive**									
7	Mathilda Ave/Westbound SR 237 Ramps**									
8	Mathilda Ave/Eastbound SR 237 Ramps**									
9	Mathilda Avenue/Ross Drive**									
10	Mathilda Avenue/Ahwanee Avenue**									
11	Mathilda Avenue/San Aleso Avenue**	AM	Signal	8.6	A	8.9	A	0.026	0.4	N/A
		PM		8.8	A	9.0	A	0.019	0.3	N/A
12	Mathilda Avenue/Maude Avenue*	AM	Signal	35.4	D+	39.5	D	0.028	6.8	N/A
		PM		39.2	D	42.4	D	0.016	5.4	N/A
13	Mathilda Avenue/Indio Way**	AM	Signal	14.4	B	14.8	B	0.019	0.6	N/A
		PM		66.0	E	71.4	E	0.018	8.3	N/A
14	Mathilda Avenue/California Ave**	AM	Signal	19.0	B-	20.0	B-	0.026	1.7	N/A
		PM		64.2	E	68.9	E	0.015	7.4	N/A
15	Mathilda Avenue/Washington Avenue**	AM	Signal	21.5	C+	22.4	C+	0.020	1.3	N/A
		PM		22.6	C+	24.1	C	0.014	2.3	N/A
16	Mathilda Avenue/West	AM	Signal	14.0	B	14.2	B	0.017	0.3	N/A

TABLE 11
CUMULATIVE AND CUMULATIVE PLUS PROJECT INTERSECTION LEVELS OF SERVICE

	Intersection	Peak Hour[1]	Inter-section Control	Cumulative Conditions		Cumulative plus Project Conditions				
				Delay[2]	LOS[3]	Delay[2]	LOS[3]	· in Crit. V/C[4]	· in Crit. Delay[5]	Signal Warrant Met?[6]
	McKinley Avenue**	PM		18.2	B-	18.5	B-	0.012	0.5	N/A
17	Mathilda Avenue/Iowa Avenue**	AM	Signal	12.8	B	12.8	B	0.007	0.1	N/A
		PM		17.3	B	17.4	B	0.009	0.3	N/A
18	Mathilda Avenue/Olive Drive**	AM	Signal	10.4	B+	10.5	B+	0.009	0.1	N/A
		PM		12.8	B	12.9	B	0.009	0.3	N/A
19	Mathilda Avenue/El Camino Real*	AM	Signal	53.2	D-	56.2	E+	0.010	4.0	N/A
		PM		46.4	D	49.1	D	0.010	4.5	N/A
20	Bordeaux Drive/Java Drive	AM	Signal	17.7	B	17.8	B	0.034	0.2	N/A
		PM		17.6	B	17.5	B	0.000	0.0	N/A
21	Bordeaux Drive/New Roadway (future)	AM	SSSC	N/A	N/A	14.4	B	N/A	N/A	N/A
		PM		N/A	N/A	10.4	B	N/A	N/A	N/A
22	Bordeaux Drive /Moffett Park Drive	AM	SSSC	33.6	D	**151.4**	**F**	0.236	2.1	No
		PM		18.6	C	**56.5**	**F**	**1.360**	**94.9**	**Yes**
23	Borregas Avenue/Caribbean Drive**	AM	Signal	11.0	B+	12.6	B	-0.068	4.2	N/A
		PM		15.8	B	9.0	A	0.289	-6.8	N/A
24	Borregas Avenue/Java Drive	AM	Signal	22.9	C+	23.5	C	0.029	0.6	N/A
		PM		17.0	B	17.9	B	0.027	0.0	N/A
25	Borregas Avenue/Moffett Park Drive	AM	SSSC	31.1	D	**116.0**	**F**	0.211	2.6	No
		PM		15.0	B	17.5	C	0.254	2.5	Yes
26	Crossman Avenue/Caribbean Drive**	AM	Signal	7.1	A	7.1	A	0.007	0.0	N/A
		PM		18.5	B-	18.8	B-	0.000	0.4	N/A
27	Crossman Avenue/Java Drive	AM	Signal	24.0	C	24.1	C	0.000	0.0	N/A
		PM		20.5	C+	20.9	C+	0.016	0.5	N/A
28	Crossman Avenue/Moffett Park Drive	AM	Signal	15.1	B	15.2	B	0.024	0.3	N/A
		PM		13.3	B	15.2	B	0.018	0.3	N/A
29	Fair Oaks Avenue/Fair Oaks Way	AM	Signal	18.9	B-	19.3	B-	0.021	0.4	N/A
		PM		26.8	C	28	C	0.022	1.5	N/A
30	Fair Oaks Avenue/Tasman Drive	AM	Signal	20.6	C+	21.0	C+	0.014	0.6	N/A
		PM		18.1	B-	18.1	B-	0.007	0.0	N/A
31	Fair Oaks Avenue/East	AM	Signal	21.4	C+	21.2	C+	0.007	-0.2	N/A

TABLE 11
CUMULATIVE AND CUMULATIVE PLUS PROJECT INTERSECTION LEVELS OF SERVICE

	Intersection	Peak Hour[1]	Inter-section Control	Cumulative Conditions		Cumulative plus Project Conditions				
				Delay[2]	LOS[3]	Delay[2]	LOS[3]	· in Crit. V/C[4]	· in Crit. Delay[5]	Signal Warrant Met?[6]
	Weddell Drive	PM		23.1	C	23.2	C	0.007	0.1	N/A
32	Fair Oaks Ave/Northbound US 101 Ramps	AM	Signal	20.2	C+	20.2	C+	0.002	0.1	N/A
		PM		21.5	C+	22.0	C+	0.011	0.8	N/A
33	Fair Oaks Avenue/Wolfe Road	AM	Signal	12.6	B	12.7	B	0.013	0.2	N/A
		PM		12.8	B	12.8	B	0.006	0.1	N/A
34	Twin Creeks Entrance/ Caribbean Drive**	AM	Signal	8.7	A	8.8	A	0.006	0.1	N/A
		PM		10.6	B+	10.6	B+	0.007	0.1	N/A
35	Moffett Park Drive/ Caribbean Drive**	AM	Signal	14.8	B	15.0	B	0.013	0.4	N/A
		PM		14.8	B	14.9	B	0.009	0.1	N/A
36	Lawrence Expressway/ Persian Drive-Elko Drive**	AM	Signal	33.8	C-	34.9	C-	0.009	1.3	N/A
		PM		33.2	C-	35.1	D+	0.009	2.9	N/A
37	Lawrence Expressway/ Tasman Drive*	AM	Signal	50.8	D	51.3	D-	0.006	0.4	N/A
		PM		56.5	E+	56.4	E+	0.008	-0.5	N/A
38	Lawrence Expressway/ Lakehaven Drive**	AM	Signal	48.3	D	48.3	D	0.008	0.2	N/A
		PM		54.8	D-	54.9	D-	0.008	0.1	N/A
39	Lawrence Expressway/NB US 101 Ramps**	AM	Signal	13.6	B	13.6	B	0.008	0.0	N/A
		PM		15.8	B	15.7	B	0.008	0.0	N/A
40	Lawrence Expressway/SB US 101 Ramps**	AM	Signal	13.0	B	12.9	B	0.008	0.0	N/A
		PM		25.2	C	25.6	C	0.008	0.5	N/A
41	Lawrence Expressway/Duane Avenue/Oakmead Parkway**	AM	Signal	40.8	D	41.0	D	0.008	0.3	N/A
		PM		43.5	D	43.5	D	0.001	-0.1	N/A
42	Lawrence Expressway/Arques Avenue*	AM	Signal	74.5	E	76.5	E-	0.008	2.9	N/A
		PM		44.0	D	44.2	D	0.006	0.1	N/A

Notes:

Bold font indicates unacceptable operations based on VTA's LOS E Standard. **Bold and highlighted** indicates significant impacts.

1 AM = morning peak hour, PM = afternoon peak hour.
2 Whole intersection weighted average control delay expressed in seconds per vehicle for signalized and all-way stop controlled intersections. Signalized intersections include adjusted saturation flow rates to reflect Santa Clara County Conditions per VTA guidelines. Total control delay for the worst movement is presented for side-street stop-controlled intersections
3 LOS = Level of Service. LOS calculations conducted using the TRAFFIX level of service analysis software package, which applies the methodology described in the *2000 HCM*.
4 Change in the critical volume-to-capacity ratio (V/C) between Existing and Project Conditions.
5 Change in critical movement delay between Existing and Project Conditions.

TABLE 11
CUMULATIVE AND CUMULATIVE PLUS PROJECT INTERSECTION LEVELS OF SERVICE

Intersection	Peak Hour[1]	Inter-section Control	Cumulative Conditions		Cumulative plus Project Conditions				
			Delay[2]	LOS[3]	Delay[2]	LOS[3]	Δ in Crit. V/C[4]	Δ in Crit. Delay[5]	Signal Warrant Met?[6]

[6] Signal warrant based CA MUTCD Warrant 3, Peak Hour (Urban Area)
* CMP intersection with LOS E threshold.
** Regionally significant intersection with LOS E threshold.
Source: Fehr & Peers, August 2013.

Some of the study intersections show a reduction in average delay with the addition of project traffic, which is counter-intuitive. The average delay values in the table are weighted averages. Weighted average delays will be reduced when traffic is added to a movement with a low delay, such as the through movements in the non-peak direction on Mathilda Avenue.[6] Conversely, relatively small volume increases to movements with high delays can substantially increase the weighted average delay.

CUMULATIVE INTERSECTION IMPACTS AND MITIGATION MEASURES

This section of the report evaluates the intersection LOS results presented in **Table 11** against the City of Sunnyvale's and VTA's criteria for significant impacts and presents mitigation measures for identified impacts. Peak hour LOS calculation worksheets including the recommended mitigation measures are provided in **Appendix E**.

INT. 3. MATHILDA AVENUE/JAVA DRIVE

During the PM peak hour, the addition of project traffic is projected to exacerbate unacceptable LOS F operations at the Mathilda Avenue/Java Drive intersection. However, the critical delay is not projected to increase by more than four seconds (0 seconds) and the critical V/C ratio is not projected to increase by more than 0.01 (0.000) between the Cumulative No Project and Cumulative plus Project scenarios; therefore the project is considered to have a **less-than-significant** impact at the Mathilda Avenue/Java Drive intersection based on Sunnyvale's impact criteria and no mitigation measures are identified.

As discussed under Background Conditions, the Mathilda Avenue/Java Drive intersection actually shows a reduction in average delay with the addition of project traffic, which is counter-intuitive. The average delay values in the table are weighted averages. Weighted average delays will be reduced when traffic is added to a movement with a low delay, such as the northbound through and right-turn movements at the Mathilda Avenue/Java Drive intersection.

[6] For example, if you have one movement with 10 vehicles with a delay of 100 seconds and another movement with 400 vehicles and 10 seconds of delay, the weighted average delay is calculated as (100 seconds X 10 vehicles + 10 seconds X 400 vehicles) /410 vehicles = 12.2 seconds per vehicle. Now if you add 100 vehicles to the movement with 10 seconds of delay, the weight average is calculated as (100 seconds X 10 vehicles + 10 seconds X 500 vehicles)/510 vehicles = 11.8 seconds per vehicle. The weighted average delay improves, even though more vehicles are added.

INT. 22. BORDEAUX DRIVE/MOFFETT PARK DRIVE

Under Cumulative plus Project Conditions the Bordeaux Drive/Moffett Park Drive intersection is projected to operate at unacceptable LOS F during the AM peak hour; however, is not projected to meet the MUTCD peak hour signal warrant volume threshold. In the PM peak hour, the intersection is projected to operate at unacceptable LOS F and is projected to meet the MUTCD peak hour signal warrant volume thresholds. Therefore, based on the City of Sunnyvale's intersection threshold, the Bordeaux Drive/Moffett Park Drive intersection would have a **significant** impact during the PM peak period.

Based on City standards, the project's impact would be mitigated to **less-than-significant** levels with the installation of a traffic signal. The signal is assumed to include a protected eastbound left-turn phase from Moffett Park Drive to northbound Bordeaux Drive and a southbound right-turn overlap phase.

The proposed R&D development complex would develop in phases. Buildings B1 and B2 near the Moffett Park Drive/Borregas Avenue intersection, building B5 near the Mathilda Avenue/Innovation Way intersection, and the parking garage at the corner of the Moffett Park Drive/Bordeaux Drive intersection would develop in the first phase. Assuming that these first three buildings and parking garage would develop in phase one, the Moffett Park Drive/Bordeaux Drive intersection and would operate at LOS C and the project would have a **less-than-significant** impact.

Although VTA guidelines only allow for a maximum 9.5 percent reduction on vehicle trips, the MPSP TDM program is required to reduce peak hour trips by 30 percent. With a 30 percent reduction in vehicle trips, the intersection would operate at acceptable LOS D and the peak hour volume warrant would not be met; thus the impact at this intersection would be **less-than-significant** with implementation of the MPSP's TDM requirements.

The proposed realignment of the SR 237 Westbound Ramp/Moffett Park Drive off-ramp discussed in **Chapter 6** and included in the City's TIF program, would require the closure of Moffett Park Drive between Mathilda Avenue and Bordeaux Drive. This closure would eliminate the eastbound approach of the Bordeaux Drive/Moffett Park Drive intersection, thus removing all conflict points and eliminating the entire intersection. Therefore, if the proposed off-ramp realignment is implemented no additional improvements would be required at this intersection. It should be noted that the specific modifications related to the reconfiguration of the SR 237/Mathilda Avenue interchange analyzed in this report are based on recommendations from the 2006 *Route 237 Corridor Study*. The SR 237/Mathilda Avenue project is currently under conceptual design review, and specific modifications to the SR 237/Mathilda Avenue intersections could change based on conclusions from the on-going analysis of this interchange.

INT. 25. BORREGAS AVENUE/MOFFETT PARK DRIVE

Under Cumulative plus Project Conditions the Borregas Avenue/Moffett Park Drive intersection is projected to operate at unacceptable LOS F during the AM peak hour; however, is not projected to meet the MUTCD peak hour signal warrant volume threshold. In the PM peak hour, the intersection is projected to operate at acceptable LOS E and is projected to meet the MUTCD peak hour signal warrant volume thresholds. While the intersection operates at an unacceptable LOS during the AM peak hour and meets the peak hour volume signal warrant during the PM peak hour, the intersection does not meet the both impact thresholds (LOS F and peak hour signal warrant) during either the AM and PM peak hours. Therefore, based on the City of Sunnyvale's intersection threshold, the Borregas Avenue/Moffett Park Drive intersection would have a **less-than-significant** impact.

It should be noted that during the AM peak hour, the worst movement for this side-street stop controlled intersection is the southbound left-turn lane (LOS F with 95.7 seconds of delay), which is projected to have 9 vehicles; thus the LOS F operations only applies to those 9 vehicles. The total delay for the southbound approach (combined southbound left-turns and right-turn movement) is projected to be 19.4 seconds of delay (LOS C). In the PM peak hour, the worst movement is the southbound right-turn lane (LOS C with 16.7 seconds of delay), which is projected to carry 80 vehicles. The total delay for the southbound approach (combined southbound left-turns and right-turn movement) is projected to be 13.4 seconds of delay (LOS B).

PROJECT ACCESS ALTERNATIVES

This section of the report presents a project access alternative evaluation. The purpose of this analysis is to determine the temporary impacts that may occur to the surrounding roadway network assuming different implementation phasing for roadway network modifications assumed as part of the project (new access road connection between Mathilda Avenue and Bordeaux Drive at Innovation Way) or proposed within the immediate vicinity of the project site (SR 237/Mathilda Avenue interchange).

Since the timing of the planned SR-237/Mathilda Avenue interchange ramp realignment is uncertain a sensitivity analysis was conducted under the following three separate access scenarios under Cumulative plus Project Conditions:

> *Alternative 1* (evaluated as part of project) - Retaining westbound Moffett Park Drive access to Mathilda Avenue via a tie to the WB 237 off ramps and providing the proposed Access Road between Mathilda Avenue and Bordeaux Drive via the Mathilda Avenue/Innovation Way intersection.
> *Alternative 2* - Providing alternative access via the proposed new roadway between Mathilda Avenue and Bordeaux Drive at Innovation Way and eliminating Moffett Park Drive between Bordeaux Drive and Mathilda Avenue.
> *Alternative 3* – Assuming that both Moffett Park Drive and the new roadway between Mathilda Avenue and Bordeaux Drive would not be provided. Traffic will divert to Java Drive and other routes.

The intersections analyzed under the three alternatives were chosen as they were determined to be affected by the new east-west roadway. LOS and average intersection delay results, using HCM 2000 methodologies (TRAFFIX), are summarized in **Table 12** for each alternative.

TABLE 12
PROJECT ACCESS ALTERNATIVE LOS SUMMARY

Intersection		Peak Hour[1]	Inter-section Control	Alternative 1 (Project Alternative)		Alternative 2 (No Moffett Park Drive)		Alternative 3 (No New Roadway and No Moffett Park Drive)	
				Delay[2]	LOS[3]	Delay[2]	LOS[3]	Delay[2]	LOS[3]
5	Mathilda Avenue/Innovation Way	AM	Signal	13.7	B	**117.0**	**F**	12.7	B
		PM		24.7	C	**146.2**	**F**	21.5	C+
20	Bordeaux Drive/ Java Drive	AM	Signal	17.8	B	18.4	B-	18.8	B-
		PM		17.5	B	20.1	C+	20.0	C+
21	Bordeaux Drive/New Roadway	AM	SSSC	8.7	A	26.5	D	N/A	N/A
		PM		8.6	A	40.1	E	N/A	N/A
22	Bordeaux Drive /Moffett Park Drive	AM	SSSC	**151.4**	**F**	N/A	N/A	N/A	N/A
		PM		**56.5**	**F**	N/A	N/A	N/A	N/A
23	Borregas Avenue/Caribbean Drive	AM	Signal	12.6	B	13.1	B	13.1	B
		PM		9.0	A	14.3	B	14.8	B
24	Borregas Avenue/Java Drive	AM	Signal	23.5	C	19.9	B-	20.9	C+
		PM		17.9	B	19.5	B-	20.8	C+
25	Borregas Avenue/Moffett Park Drive	AM	SSSC	**116.0**	**F**	22.2	C	22.1	C
		PM		17.5	C	12.4	B	12.4	B

Notes:
1 AM = morning peak hour, PM = afternoon peak hour.
2 Whole intersection weighted average control delay expressed in seconds per vehicle for signalized intersections. Signalized intersections include adjusted saturation flow rates to reflect Santa Clara County Conditions per VTA guidelines. Total control delay for the worst movement is presented for side-street stop-controlled intersections
3 LOS = Level of Service. LOS calculations conducted using the TRAFFIX level of service analysis software package, which applies the methodology described in the *2000 HCM*.
Source: Fehr & Peers, August 2013.

As shown in **Table 16**, all intersections operate at acceptable levels of delay under all three scenarios with the following exceptions:

<u>Alternative 1</u>
- Bordeaux Drive/Moffett Park Drive – AM and PM peak hours (LOS F)
- Borregas Avenue/Moffett Park Drive – AM peak hour (LOS F)

<u>Alternative 2</u>
- Mathilda Avenue/Innovation Way – AM and PM peak hour (LOS F)

<u>Alternative 3</u>
- None

The following improvements would be required to restore operations at the key identified intersections to acceptable levels under each alternative.

Alternative 1 - Retaining WB Moffett Park Drive access to Mathilda Avenue via a tie to the WB 237 off ramps

Bordeaux Drive/Moffett Park Drive
Signalization would restore operations at the intersection back to acceptable levels, based on the City's LOS standards.

Borregas Avenue/Moffett Park Drive
Signalization would restore operations at the intersection back to acceptable levels, based on the City's LOS standards.

Alternative 2 - Providing alternative access via the proposed new Bordeaux/Innovation roadway

Mathilda Avenue/Innovation Way
A second westbound left-turn lane would be required to restore operations back to acceptable levels at this intersection, based on the City's LOS standards.

Alternative 3 - No Moffett Park Drive access/no new road/traffic diversion to Java Drive, other routes

No Improvements required at intersections analyzed for the Alternative Access Evaluation.

FIRE STATION IMPACTS

The project also includes a potential 17,000-s.f. fire station at the north-east corner of the Borregas/New Access Road intersection. The fire station would replace an existing fire station on the west side of Mathilda Avenue near Innovation Way. The fire station was not included in the LOS analysis, since the relocation of the fire station from the west side of Mathilda Avenue to the east side would have negligible impacts on the operations of the study intersections. Generally, fire stations generate relatively low number of trips during the commute peak hours. Since the existing and proposed fire station are in the same general area, the general approach/departure volumes for the fire station along the Mathilda Avenue corridor would be the same, except as it relates to site access. For example, trips that previously made a northbound left-turn at the Mathilda Avenue/Innovation Way intersection would now make a northbound right-turn at either the Mathilda Avenue/Moffett Park Drive or the Mathilda Avenue/Innovation Way intersections. Right-turns generally have less effects on LOS than left-turns; the relocation of the fire station would have a negligible impact on LOS on the study intersections on Mathilda Avenue.

6. MATHILDA AVENUE CORRIDOR ANALYSIS

This chapter presents the results of the level of service calculations for the six study intersections in the Mathilda Avenue corridor between Innovation Way and Ahwanee Avenue under Existing, Background, and Cumulative Conditions. The study intersections on the Mathilda Avenue corridor are closely spaced and the corridor experiences operational issues beyond isolated intersection LOS. To present a comprehensive analysis standard TRAFFIX level of calculations are augmented with a micro simulation analysis using SimTraffic. The Mathilda Avenue/SR 237 ramp realignment is also discussed in this chapter.

CORRIDOR DESCRIPTION

The Mathilda Avenue corridor contains six intersections with four closely-spaced, signalized intersections within a distance of 750 feet between Moffett Park Drive and Ross Drive. These intersections convey traffic to three major regional roadways: SR 237, US 101, and Mathilda Avenue. The combination of heavy traffic volumes and close intersection spacing makes lane changes difficult; resulting in numerous weaving maneuvers between each intersection. In addition, several through lanes on Mathilda Avenue ultimately end in turn lanes at downstream intersections (this condition is commonly referred to as a trap lane). A diagram of the roadway geometry for this corridor is presented on **Figure 13**. As a result of the existing roadway configuration, a large number of weaving maneuvers occur and vehicle queues spill back to adjacent intersections resulting in travel delays. To present a comprehensive analysis of the corridor operations Mathilda Avenue between Innovation Way and Ahwanee Avenue is analyzed using both TRAFFIX and SimTraffic level of service software programs. The results for each analysis method are discussed below.

TRAFFIX LEVEL OF SERVICE ANALYSIS

Table 13 summarizes the intersection LOS results for the six study intersections on the Mathilda Avenue corridor between Innovation Way and Ahwanee Avenue for all analysis scenarios. **Appendix C** contains the corresponding calculation sheets.

The results of the LOS calculations indicate that the corridor intersections operate at acceptable service levels (LOS E or better for regionally significant and CMP intersections) using TRAFFIX LOS software during the AM and PM peak hours with the exception of the following:

Int. 6. Mathilda Avenue/Moffett Park Drive: the addition of project traffic exacerbates unacceptable LOS F operations during the AM and PM peak hours under the plus Project scenarios for Background and Cumulative Conditions.

Int. 7. Mathilda Avenue/Westbound SR 237 Ramps: During the PM peak hour, the addition of project traffic exacerbates unacceptable LOS F operations under the plus Project scenarios for Background and Cumulative Conditions. The intersection operates at acceptable service levels during the AM peak hour under all three plus Project scenarios.

Under Existing plus Project Conditions all of the Mathilda Avenue corridor study intersections are projected to operate at acceptable service levels.

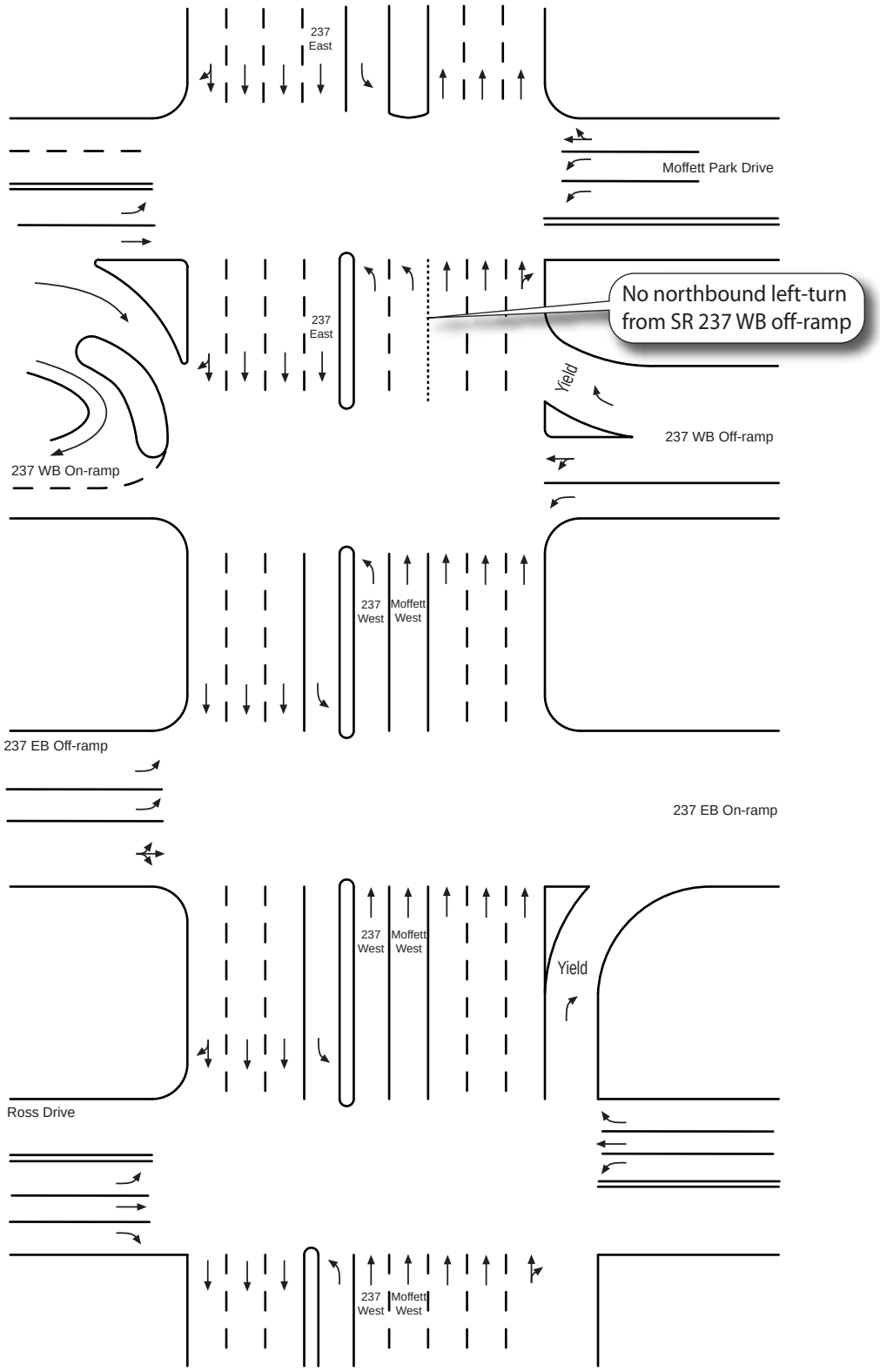

Figure 13.

Matilda Avenue Roadway Diagram

FEHR PEERS

N:\Jobs\Active\SJ Jobs\SJ13-1423_Moffett_Place_TIA\Graphics\Draft\Ai

TABLE 13
MATHILDA AVENUE TRAFFIX INTERSECTION LEVELS OF SERVICE

Intersection	Inter-section Control	Peak Hour[1]	Existing Conditions				Background Conditions				Cumulative Conditions			
			No Project		Plus Project		No Project		Plus Project		No Project		Plus Project	
			Delay[2]	LOS[3]	Delay[2]	LOS[3]	Delay[2]	LOS[3]	Delay[2]	LOS[3]	Delay[2]	LOS[3]	Delay[2]	LOS[3]
5. Mathilda Avenue/ Innovation Way	Signal	AM	7.9	A	12.0	B+	9.1	A	13.4	B	9.3	A	13.7	B
		PM	13.5	B	15.9	B	16.5	B	21.4	C+	18.0	B-	24.7	C
6. Mathilda Avenue/ Moffett Park Drive	Signal	AM	18.4	B-	52.3	D-	**100.8**	**F**	**151.1**	**F**	**116.6**	**F**	**169.1**	**F**
		PM	19.3	B-	26.4	C	**216.0**	**F**	**250.5**	**F**	**243.4**	**F**	**275.5**	**F**
7. Mathilda Ave/ WB SR 237 Ramps	Signal	AM	12.0	B	12.9	B	23.1	C	58.6	E+	32.5	C-	75.3	E-
		PM	15.3	B	15.9	B	**111.7**	**F**	**138.5**	**F**	**135.0**	**F**	**166.4**	**F**
8. Mathilda Ave/ EB SR 237 Ramps	Signal	AM	13.2	B	14.2	B	17.9	B	22.1	C+	20.1	C+	30.2	C
		PM	10.3	B+	12.5	B	16.9	B	26.7	C	23.0	C+	38.3	D+
9. Mathilda Avenue/ Ross Drive	Signal	AM	12.9	B	13.0	B	12.0	B	12.4	B	12.3	B	12.8	B
		PM	14.5	B	14.5	B	21.3	C+	35.6	D+	29.1	C	43.5	D
10. Mathilda Avenue/ Ahwanee Avenue	Signal	AM	17.2	B	17.2	B	18.5	B-	19.1	B-	19.4	B-	20.4	C+
		PM	20.4	C+	20.7	C+	43.4	D	53.6	D-	56.8	E+	64.8	E

Notes:
Bold font indicates unacceptable operations based on VTA's LOS E Standard. **Bold and highlighted** indicates significant impacts.
1 AM = morning peak hour, PM = afternoon peak hour.
2 Whole intersection weighted average control delay expressed in seconds per vehicle for signalized intersections. Signalized intersections include adjusted saturation flow rates to reflect Santa Clara County Conditions per VTA guidelines.
3 LOS = Level of Service. LOS calculations conducted using the TRAFFIX level of service analysis software package, which applies the methodology described in the *2000 HCM*.
Source: Fehr & Peers, August 2013.

MATHILDA AVENUE TRAFFIX INTERSECTION IMPACTS AND MITIGATIONS

This section of the report evaluates the intersection LOS results presented in **Table 13** against the City of Sunnyvale's, and VTA's criteria for significant impacts and presents mitigation measures for identified impacts.

Existing Plus Project Conditions

Under Existing plus Project Conditions all of the Mathilda Avenue corridor study intersections are projected to operate at acceptable service levels and no further mitigations are required.

Background Plus Project and Cumulative Plus Project Conditions

The project has significant impacts at the following two intersections under the plus Project scenarios for both Background and Cumulative Conditions based on the City of Sunnyvale's criteria:.

Int. 6. Mathilda Avenue/Moffett Park Drive (AM and PM peak hours)

Int. 7. Mathilda Avenue/SR 237 Westbound Ramps (PM peak hour)

LOS calculation worksheets including the recommended mitigation measures are provided in **Appendix E**.

Int. 6. Mathilda Avenue/Moffett Park Drive

The intersection of Mathilda Avenue/Moffett Park Drive is projected to operate deficiently under the No Project scenarios for Background and Cumulative Conditions. Under plus Project conditions, unacceptable AM and PM peak hour operations would be exacerbated with the addition of project traffic. Since the critical delay increases by more than four seconds and the critical V/C ratio increases by more than 0.01 between the No Project and plus Project Scenarios for Background and Cumulative Conditions, the project is considered to have a **significant** impact at the Mathilda Avenue/Moffett Park Drive intersection based on the Sunnyvale's impact criteria.

Reconfiguration of the SR 237/Mathilda Avenue ramp intersections would reduce the impact to a **less-than-significant level**. Payment of the City's TIF would constitute the project's fair share contribution. These improvements consist of:

- Shifting the SR 237 Westbound Off-ramp 150 feet to the north to align with Moffett Park/Mathilda Avenue;
- Removal of SR 237 Westbound On-ramp; and,
- Construction of a direct southbound right-turn on-ramp from Mathilda Avenue to US 101 north.

These improvements are programmed in both the City's TIF and the VTA's *VTP 2035* list of constrained projects. The hotel development represents approximately eight percent of the net new AM peak hour trips and ten percent of the net new PM peak hour trips; therefore the hotel development would be responsible for their relative contribution level to the TIF.

Although VTA guidelines only allow for a maximum 9.5 percent reduction of vehicle trips due to TDM a program and location near a rail station, the MPSP TDM program is required to reduce peak hour trips by 30

percent. With a 30 percent reduction in vehicle trips, the intersection would continue to operate at LOS F, and would continue to have a **significant** impact.

Int. 7. Mathilda Avenue/SR 237 Westbound Ramps

The addition of project traffic will exacerbate unacceptable LOS F operations at the intersection of Mathilda Avenue/SR 237 Westbound Ramps in the PM peak hour under plus Project Conditions for both the Background and Cumulative scenarios. The critical delay is projected to increase by more than four seconds and the critical V/C ratio is projected to increase by more than 0.01 between the No Project and plus Project Scenarios for Background and Cumulative conditions; therefore the project is considered to have a **significant** impact based on the City's impact criteria.

The identified improvements for the Mathilda Avenue/Moffett Park Drive intersection would also mitigate the impacts identified for the Mathilda Avenue/SR 237 Westbound Ramp intersection **to less-than significant levels**, since they include the elimination of this intersection. Payment of the City's TIF would constitute the project's fair share contribution. The hotel development represents approximately eight percent of the net new AM peak hour trips and ten percent of the net new PM peak hour trips; therefore the hotel development would be responsible for their relative contribution level to the TIF.

Although VTA guidelines only allow for a maximum 9.5 percent reduction on vehicle trips, the MPSP TDM program is required to reduce peak hour trips by 30 percent. With a 30 percent reduction in vehicle trips, the intersection would continue to operate at LOS F, and would continue to have a **significant** impact.

MICROSIMULATION ANALYSIS LEVEL OF SERVICE ANALYSIS

The study intersections in the Mathilda Avenue corridor between Moffett Park Drive and Almanor Avenue are closely spaced and the corridor experiences operational issues primarily due to vehicle weaving. The TRAFFIX analysis software program does not accurately capture the operations of the Mathilda Avenue corridor since it does not evaluate the interactions of closely-spaced and coordinated intersections. To better estimate and assess the projected traffic operations a micro simulation analysis using SimTraffic was conducted. The micro simulation analysis was also utilized to provide an assessment of the weaving operations at the US 101/Mathilda Avenue interchange.

Table 14 displays the projected LOS and delay along Mathilda Avenue based on the SimTraffic analysis. SimTraffic LOS and Queuing worksheets are provided in **Appendix F**.

<u>Existing plus Project</u>

As shown in **Table 14**, when analyzed using a micro simulation, the intersections along Mathilda Avenue operate worse than reported using standard HCM 2000 methodologies (TRAFFIX) for Existing plus Project conditions. Generally, each intersections operates at LOS E or F during either the AM or PM peak period, with the Mathilda Avenue/Moffett Park Drive intersection estimated to operate at LOS F during the PM peak hour. Generally, the corridor operates without excessive queues and spillbacks. However, the queue for the northbound right turn at Moffett Park Drive/Mathilda Avenue intersection spills back to the US 101/Mathilda Avenue interchange (approximately 1,200 feet) in the morning peak hour. In the afternoon, the queue for the westbound right turn at Moffett Park Drive/Mathilda Avenue spills back to Innovation Way. The queue for the eastbound left turn at Moffett Park Drive/Mathilda Avenue spills out of the pocket and extends to Bordeaux Drive.

Under Existing plus Project Conditions it is projected that the vehicular queues on the freeway ramps would not spill back onto the freeway mainline, with the exception of the following:

- US 101 NB Off-Ramp / Mathilda Avenue (north) during the AM peak hour
- SR 237 EB Off-ramp / Mathilda Avenue during the AM peak hour

Background plus Project

As shown in **Table 14**, when analyzed using a micro simulation the intersections along Mathilda Avenue operate significantly worse than what was projected using standard HCM 2000 methodologies (TRAFFIX) under Background plus Project conditions. During the AM peak hour this is predominantly due to movements from the freeway ramps and side streets being blocked by queued traffic along Mathilda Avenue which has spilled back from downstream intersections due to lack of vehicular storage. During the PM peak hour the closely spaced intersections and heavy weaving movements act as a choke point for the heavy southbound vehicular movements projected along Mathilda Avenue. The primary bottleneck is the signal tandem at SR 237 WB Ramps/Mathilda Avenue and at Moffett Park Drive/Mathilda Avenue.

The micro simulation analysis was also used to assess the freeway ramp queuing at both the SR 237 and US 101 interchanges along Mathilda Avenue. Queuing on the SR 237 and US 101 ramps currently occurs due to the tight and congested weaving movements from the ramps to Mathilda Avenue. Under Background plus Project Conditions it is projected that the vehicular queues on the freeway ramps would not spill back onto the freeway main lanes, with the exception of the following:

- US 101 NB Off-Ramp / Mathilda Avenue (north) during the AM peak hour
- SR 237 WB Off-ramp / Mathilda Avenue during the AM peak hour
- SR 237 EB Off-ramp / Mathilda Avenue during the AM peak hour
- US 101 NB Off-Ramp / Mathilda Avenue (south) during the PM peak hour

Cumulative plus Project

During the AM peak hour the three intersections south of the Eastbound SR 237 ramps are projected to operate at unacceptable LOS F. During the PM peak hour every intersection is projected to operate at a unacceptable LOS F. This is in contrast to what was reported using the standard HCM LOS methodologies (TRAFFIX), where no deficiencies were shown in the corridor, with the exception of the eastbound and westbound SR 237 ramps. This is because HCM methodologies only measure the capacity of a single intersection and do not take into account delay caused by queues from downstream intersections or deficient weaving movements. Based on this analysis it can be concluded that the tight intersection spacing, high traffic conflicting traffic volumes within the limited weave points and lack of vehicular storage between intersections is the predominate cause of the poor operations within the segment of Mathilda Avenue. These issues result in both excessive delays and low travel speeds throughout the corridor.

TABLE 14
MATHILDA AVENUE PLUS PROJECT INTERSECTION LEVELS OF SERVICE BASED ON MICRO SIMULATION

Intersection		Inter-section Control	Peak Hour	Existing Plus Project		Background plus Project		Cumulative plus Project	
				Stop Delay	LOS	Stop Delay	LOS	Stop Delay	LOS
5	Mathilda Avenue/Innovation Way-New Roadway	Signal	AM	13.8	B	13.5	B	21.4	C
			PM	**66.3**	**E**	**>180.0**	**F**	**>180.0**	**F**
6	Mathilda Avenue/Moffett Park Drive	Signal	AM	22.0	C	34.8	C	68.3	E
			PM	**124.7**	**F**	**123.6**	**F**	**>180.0**	**F**
7	Mathilda Ave/Westbound SR 237 Ramps	Signal	AM	38.1	D	57.5	E	55.6	E
			PM	17.6	B	**>180.0**	**F**	**>180.0**	**F**
8	Mathilda Ave/Eastbound SR 237 Ramps	Signal	AM	**62.3**	**E**	**98.6**	**F**	**101.9**	**F**
			PM	14.6	B	21.8	C	**>180.0**	**F**
9	Mathilda Avenue/Ross Drive	Signal	AM	**63.6**	**E**	**152.6**	**F**	**>180.0**	**F**
			PM	40.7	D	55.4	E	**>180.0**	**F**
10	Mathilda Avenue/Ahwanee Avenue	Signal	AM	35.9	D	**66.2**	**E**	**116.0**	**F**
			PM	31.4	C	46.3	D	**115.6**	**F**

Notes:
Source: Fehr & Peers, August 2013.

MATHILDA AVENUE/SR 237 RAMP REALIGNMENT EVALUATION

The City's TIF and VTA's VTP 2035 include the reconfiguration of the SR 237/Mathilda Avenue ramp intersection in their lists of projects. This is a funded project that is currently under design evaluation by VTA. As identified in the 2006 *Route 237 Corridor Study,* this improvement would shift the westbound SR 237 off-ramp north to align with the westbound leg of Moffett Park Drive at Mathilda Avenue. The western leg of Moffett Park Drive between Mathilda Avenue and Bordeaux Drive would be removed. The on-ramp for westbound SR 237 would also be removed. This improvement specifically includes:

- Reconfiguration of Mathilda Avenue/SR 237 to eliminate the traffic signal aligning with the SR 237 Westbound off and on ramps
- Shifting of the Westbound SR 237 off ramp to an alignment approximating the current alignment of Moffett Park Drive
- Restriction of access to the westbound SR 237 on ramp to southbound Mathilda and eastbound Moffett Park Drive traffic only – no northbound Mathilda access
- Elimination of eastbound Moffett Park Drive access from Mathilda Avenue, tying westbound Moffett Park Drive into the WB 237 ramp via a stop or signal

- Elimination of the northbound US 101 to Northbound Mathilda free right turn ramp and northbound US 101 to southbound Mathilda loop ramp, replacement with a traffic signal serving both movements

Additional engineering study and review is currently being led by VTA to determine if this is the best geometric alternative based on the projected future demands (auto, transit, pedestrian and bicycle) within the corridor, or if improvements to parallel facilities, such as the Mary Avenue overcrossing should be considered as future development occurs. The specific modifications to the SR 237/Mathilda Avenue intersections could change based on conclusions from the on-going analysis of this interchange.

As noted previously, traffic associated with the proposed project is anticipated to significantly impact the vehicular operations at the SR 237 Westbound/Mathilda Avenue interchange and has identified this improvement as a mitigation measure. To verify that realignment of the SR 237 ramps will improve operations at the impacted intersections a micro simulation analysis was conducted under Cumulative plus Project conditions assuming the above changes. **Table 15** provides a summary of the LOS and delay results assuming the realignment of the SR 237 ramps.

As shown in **Table 15**, it is projected that the proposed ramp realignment will improve the operations at most intersections within the Mathilda Avenue corridor. With the current configuration all study intersections in the corridor are projected to operate at unacceptable LOS F during at least one of the peak hours, while operations with the proposed realignment improve on the Mathilda Avenue corridor and result in fewer queue spillbacks. It should also be noted that the operations at the following intersections are anticipated to significantly degrade with the Ramp Realignment.

Mathilda Avenue/Innovation Way – New Roadway (AM Peak) – Intersection operations are projected to degrade at this intersection due to the shifting of traffic (mainly project related) from Moffett Park Drive, east of Mathilda Avenue, to the New Roadway, which will serve as the southernmost connection between Bordeaux Drive and a Mathilda Avenue.

Mathilda Avenue/Moffett Park Drive-237 Westbound Off-Ramp (AM Peak) – Intersection operations are projected to degrade at this intersection due to the additional westbound traffic associated with the SR 237 Westbound Off-Ramp. The additional traffic from the westbound off-ramp creates a conflict with the heavy northbound Mathilda Avenue movement, resulting in a lack of overall green time and capacity at the intersection.

As noted previously, the specific modifications related to the reconfiguration of the SR 237/Mathilda Avenue interchange analyzed in this report are based on recommendations from the 2006 *Route 237 Corridor Study*. While the Ramp Realignment will improve conditions within the corridor, particularly at the Mathilda Avenue/SR 237 interchange, the corridor will still operate at substandard levels. Additional engineering study and review is currently being led by VTA to determine if this is the best geometric alternative based on the projected future demands within the corridor, or if improvements to parallel facilities, such as the Mary Avenue overcrossing should be considered as future development occurs. The specific modifications to the SR 237/Mathilda Avenue intersections could change based on conclusions from the on-going analysis of this interchange.

TABLE 15
MATHILDA AVENUE/SR 237 INTERCHANGE RECONFIGURATION INTERSECTION LEVELS OF SERVICE
MICRO SIMULATION ANALYSIS

Intersection		Peak Hour	Inter-section Control	Cumulative plus Project Conditions					
				TRAFFIX Existing Configuration		SimTraffic Existing Configuration		SimTraffic Ramp Realignment	
				Delay	LOS	Delay	LOS	Delay	LOS
5	Mathilda Avenue/Innovation Way-New Roadway	AM	Signal	13.7	B	21.4	C	**149.9**	**F**
		PM		24.7	C-	**>180.0**	**F**	**>180.0**	**F**
6	Mathilda Avenue/Moffett Park Drive-237 Westbound Off-Ramp*	AM	Signal	**168.6**	**F**	68.3	E	**102.9**	**F**
		PM		**>180.0**	**F**	**>180.0**	**F**	**>180.0**	**F**
7	Mathilda Ave/Westbound SR 237 On-Ramps**	AM	Signal**	75.1	E-	55.6	E	22.6	C
		PM		**166.4**	**F**	**>180.0**	**F**	5.3	A
8	Mathilda Ave/Eastbound SR 237 Ramps**	AM	Signal	30.1	C	**101.9**	**F**	**112.4**	**F**
		PM		38.3	D+	**>180.0**	**F**	22.4	C
9	Mathilda Avenue/Ross Drive	AM	Signal	12.8	B	**>180.0**	**F**	**174.4**	**F**
		PM		43.5	D	**>180.0**	**F**	33.2	C
10	Mathilda Avenue/Ahwanee Avenue	AM	Signal	20.4	C+	**116.0**	**F**	69.0	E
		PM		64.8	E	**115.6**	**F**	42.3	D

Notes
* Under Ramp Realignment Scenario the SR-235 Westbound Off-Ramp is reconfigured to the current Moffett Place alignment
** Under Ramp Realignment Scenario the signal at the Mathilda Ave/Westbound SR 237 On-Ramps was assumed to be removed
Source: Fehr & Peers, August 2013.

7. SITE ACCESS, ON-SITE CIRCULATION, MULTI-MODAL TRANSPORTATION, AND PARKING ASSESSMENT

This chapter of the report discusses other transportation impacts not addressed in the previous chapters. Topics include site-access, on-site circulation, pedestrian and bicycle access and circulation, transit impacts, and a parking assessment.

ACCESS AND CIRCULATION REVIEW

Figure 2 shows the proposed (draft) site plan for the Moffett Place project indicating the location of the project driveways and the internal circulation system that supports auto, pedestrian, and bicycle traffic. Future access to/from the project site and the internal circulation within the project site are discussed below.

The proposed project access will be provided via several driveways located on Bordeaux Drive and Borregas Avenue as well as a single right-in/right-out driveway located on Mathilda Avenue providing access to a small surface parking lot serving Building B5. Parking Structure 1 access will be provided via two driveways located on Borregas Avenue, while Parking Structure 2 access will be via a driveway located on Bordeaux Drive and a secondary driveway on Borregas Avenue. An additional auxiliary surface parking lot will be located north of the Santa Clara Water District flood control channel and east of Bordeaux Drive. This lot will take access via two driveways located on Bordeaux Drive as well as a proposed bridge structure over the creek connecting the lot to Building B4.

Based on a preliminary review of the draft project site plan (displayed on **Figure 2**), all project driveways are well spaced, properly aligned with opposing driveways and provide adequate distance away from public intersections. This design will disperse project traffic to numerous access points and avoid creating heavy turning movements into the project site. This in turn will manage queuing associated with vehicles entering the project site and minimize queues spilling back into downstream public intersections.

PEDESTRIAN AND BICYCLE ACCESS AND CIRCULATION

This section addresses both off-site and on-site pedestrian and bicycle access and circulation.

PEDESTRIAN EVALUATION

Sidewalks will be provided along the perimeter of the project site along the north side of Moffett Park Drive, both sides of Bordeaux Drive, the west side of Borregas Avenue and both sides of the proposed new roadway. Pedestrian connections would be provided between the proposed buildings, parking lots, and parking garages. The project also includes two distinct internal pedestrian paths designed to provide a direct link through the project site between the buildings located east of Bordeaux Drive and Mathilda Avenue (located along the western boundary of the site) where the Lockheed Martin transit station is located. The pedestrian paths would terminate on Mathilda Avenue just south of the Mathilda Avenue/Innovation Way-Proposed New Roadway intersection, where pedestrians would need to cross to the west side of Mathilda Avenue and travel north approximately 900 feet to reach the Lockheed Martin Transit station. Due to the potential increase in pedestrian traffic between the Lockheed Marin Transit station and the project site, it is recommended that countdown pedestrian signal heads be installed at the Mathilda Avenue/Innovation Way-Proposed New Roadway intersection when the westbound leg (Proposed New Roadway) of the intersection is constructed.

For the buildings along Borregas Avenue, the Borregas LRT station on Java Drive is closer than the Lockheed Martin station. For light rail trains traveling in the westbound direction on Java Drive, the Borregas LRT station is provided just west of the Borregas Avenue intersection, and for light rail trains traveling in the eastbound direction, the station is provided east of the Java Drive/Borregas Avenue intersection. No sidewalks are currently provided on the east side of Borregas Drive south of Gibraltar Drive. Due to the potential increase in pedestrian traffic between the Borregas LRT station and the project site, it is recommended that sidewalks be constructed on the east side of Borregas Avenue between Gibraltar Drive and Moffett Park Drive.

Both internal paths would require midblock pedestrian crossings on Bordeaux Drive. Both crossings would be located to the north of the access point to Parking Structure #2; therefore high traffic volumes are not anticipated at either location. However, it is still recommended that striped crosswalks and Rectangular-Rapid Flashing Beacons (RRFB) be provided at a minimum at both midblock crossings to help alert drivers of pedestrians. Raised crosswalks, as depicted in the image below, would be ideal treatments at these locations and should be further evaluated if significant pedestrian volumes are observed with the implementation of the proposed project. Additional measures such as advanced stop bars and shark teeth could also be implemented to alert motorists of the crossing point.

It is recommended that the southern pedestrian path across the project site be aligned with the edge of the parking aisle instead of mid-aisle. While this location may result in additional conflict points between vehicles and pedestrians; drivers will already be looking for conflicting vehicular movements at this point and will naturally be more alert to pedestrian movements.

To facilitate pedestrian and bicycle access to the SR 237 overcrossing, the existing crosswalk on the west-leg of the Moffett Park Drive/Borregas Avenue intersection should be enhanced. Currently, this crosswalk provides high-visibility ladder striping; however, this is an uncontrolled crossing that requires pedestrians to cross two lanes of vehicle traffic, which have no stop-control and should yield to pedestrians. Enhancements such as Rectangular Rapid Flashing Beacons (RRFB), In-roadway Warning lights (IRWL), or raised crosswalks should be considered for this pedestrian crossing. Additionally, it is recommended that the curb radii on north-east and north-west corners be reduced to slow vehicular turning speeds and increase pedestrian connectivity.

BICYCLE ACCESS EVALUATION

Near the project site, there are bicycle lanes in both directions on both Bordeaux Drive between Moffett Park Drive and Java Drive and Borregas Avenue between Maude Avenue and Caribbean Drive. Bicycle lanes are provided on Mathilda Avenue (north of Bordeaux Drive) and Moffett Park Drive (east of Bordeaux Drive). A bicycle route is designated on Mathilda Avenue from Bordeaux Drive to Innovation Way. A bicycle path extends from the north-east of the US 101/Mathilda Avenue interchange along the John W. Christian Greenbelt from Garner Drive to Morse Avenue; where it connects with existing bike lanes along Weddell Drive.

PEDESTRIAN AND BICYCLE IMPACTS

Based on a preliminary review of the draft project site plan (displayed in **Figure 2**), the proposed project would not jeopardize pedestrian and/or cyclist safety or comfort on the key pedestrian and bicycle facilities accessing the proposed site. Nor would the project substantially increase hazards due to a design feature, or would conflict with the adopted policies plans, or programs that support alternative transportation. Therefore, the proposed project is not anticipated to significantly impact to the pedestrian and bicycle networks adjacent to the project site, based on the standard outlined in Appendix G of the *California Environmental Quality Act (CEQA) Guidelines*.

TRANSIT ACCESS

Transit impacts are considered significant if the proposed project conflicts with existing or planned transit facilities, generates potential transit trips in excess of available capacity, or does not provide adequate facilities for pedestrians and bicyclists to access transit routes and stops. Based on these criteria, the project would not have a significant impact on transit service.

The existing load factors (average number of riders per trip) for Light rail Line 902 and Routes 26, 54, 120, 121, 122, 321, and 328 were provided by VTA. Light rail trains have seated capacities of 65 people per car and buses have seated capacities of 38. The load factor for Line 902 at the Lockheed Martin Transit Station is 0.34 (22 people). For Routes 26 and 54, the load factors are 0.49 (19 people) and 0.33 (13 people), respectively. The express routes have load factors between 0.38 (14 people) and 0.52 (20 people).

The transit service within the immediate project area operates well below capacity, and additional trips generated by the proposed project could be accommodated by existing light-rail and bus service. The area also has a well-used shuttle system (see *Existing Conditions* and **Figure 5**) that would be able to accommodate additional riders; though it is recommended that the project either subsidize an existing shuttle or provide a private shuttle to facilitate direct transit access between regional transit hubs (such as downtown Sunnyvale Caltrain Station) or other potential markets to the project site, based on a market analysis. The developer, in

cooperation with the City and other potentially benefiting parties, should provide such an analysis and other logistical requirements for evaluating and establishing shuttle service.

The Lockheed Martin Transit Center, where most of the available transit service is focused, would be readily accessible to pedestrians and bicyclists generated by the proposed project because the facility is located approximately 900 feet north of the project site on Mathilda Avenue. This is a short and manageable walking distance for most pedestrians. Also as noted in the previous section, the project site will include two east-west pedestrian pathways, through the project site, designed to provide a linkage between the buildings located on the eastern portion of the site to Mathilda Avenue where the transit center is located.

PARKING ASSESMENT

The MPSP provides off-street parking and bicycle requirements for the Moffett Park area.

Vehicle Parking

The MPSP requires office land uses with the MPSP area to prove a minimum off-street parking supply at a rate of one space per 300 s.f. of gross floor area; or 3.3 spaces per 1,000 s.f. and a maximum rate of one space per 250 s.f. of gross floor area (4 spaces per 1000 s.f.). The City of Sunnyvale's Municipal Code (section 19.46.100) requires that non-residential hotel uses provide 0.8 space per room and a maximum rate of 1.2 spaces per room. **Table 16** summarizes the proposed parking supply and parking requirements for the Moffett Place expansion projects. Based on the City of Sunnyvale's Municipal Code (section 19.46.050) up to 50 percent of the spaces can be designed for compact cars.

TABLE 16
VEHICLE PARKING REQUIREMENTS

Project Site	Project Size	Required Parking Supply[1]	Proposed Parking Supply	Meet Parking Requirement?
Moffett Place Office Development[2]	1,729,554 s.f.	5,766	5,766	Yes
Hotel Expansion	307 rooms	246	278	Yes

Notes:

1 MPSP requires minimum parking supply ratio of 1 space per 300 s.f. of gross floor area of office use. The City of Sunnyvale Municipal Code required 0.8 space per room for hotel uses.

2 The square footage for the proposed office development excludes the 50,000-sf amenities building, since this would only be for use of Moffett Place employees.

Source: Fehr & Peers, July 2013.

Based on the requirements of the MPSP the project would be required to provide a total of 5,766 parking spaces for the office development assuming that the 50,000 amenities building would be for exclusive use of project employees. The hotel develop would require 246 spaces based on the City's Municipal Code. The Moffett Place Office Development proposes to provide 5,766 parking spaces, which meets the required by the MPSP. Similarly, the hotel development proposes to provide 278 spaces, which exceeds the City of Sunnyvale Municipal Code requirement by 32 spaces.

BICYCLE PARKING

The MPSP provides both Class I and Class II bicycle parking requirements. Class I facilities protect the entire bicycle from theft, vandalism, and inclement weather and are appropriate for long-term storage. Examples include bike lockers, rooms with key access, guarded parking areas, and valet/check-in parking. Class II parking facilities include bicycle racks to which the frame and at least one wheel can be secured with a user-provided lock. The MPSP bicycle requirements are the same as recommended by the VTA in their TIA Guidelines The MPSP requires office uses to provide one bicycle parking space per 6,000 s.f. of gross floor area. Of that requirement 75 percent needs to be Class I parking facilities and 25 percent Class II facilities. The bicycle parking requirement for hotel users is one Class I space for every 30 rooms and every 30 employees (the MPSP does not have Class II requirements for hotel uses).

The Moffett Park Office Development will need to supply 290 bicycle spaces (1,729,554 s.f./6,000) on the project site Of these, 75 percent (218 spaces) will be Class I bicycle lockers and remaining 25 percent (72 spaces) will be Class II bicycle facilities. The hotel will be required to provide 13 (307 rooms/30 plus 45 employee/30) Class I bicycle parking spaces. With the provision of these bicycle parking facilities the project will meet City and MPSP guidelines.

8. CONSTRUCTION IMPACTS

Construction for the Moffett Place expansion project is anticipated to occur approximately during the same time and is expected to occur over a one-year period. This section of the report addresses construction-related impacts of the proposed projects, specifically as they relate to expected traffic and parking impacts. General recommendations on construction-related mitigations, such as limiting times when trucks would be permitted to travel to/from the sites and restricting routes to prevent impacting neighboring communities, are provided.

TRAFFIC OPERATIONS

Mathilda Avenue is the City designated truck route that provides the most direct access to the project sites. In general truck access to the site should be limited to Mathilda Avenue, Moffett Park Drive, Bordeaux Drive and Borregas Avenue since these provide the most direct access.

As shown in **Table 8** all of the study intersections near the project site operate at an acceptable LOS under Existing plus Project Conditions, with the exception of the following:

- Bordeaux Drive/Moffett Park Drive (LOS F – PM Peak Hour)

During the peak of project construction it is estimated that approximately 425 workers will be needed onsite. If we assume a worst case scenario where all workers individually drive a personal vehicle to the project site and arrive during the AM peak hour and depart during the PM peak hour this would result in 425 AM inbound trips and 425 PM outbound trips. While this traffic is significantly lower than what the proposed project is projected to generate, this would still result in a high concentration of traffic maneuvering through the unsignalized intersections on Moffett Park Drive at Bordeaux Drive and Borregas Avenue during a peak period. This could result in poor operations along Moffett Park Drive due to turning movement queuing. To prevent this potential impact it is recommended that in-bound traffic from Mathilda Avenue be instructed to access the construction site via Mathilda Avenue or Moffett Park Drive, while outbound construction traffic be restricted to the Mathilda Avenue intersection at Java Drive. Restricting the directional access to the construction site would avoid the need for flagmen to be placed at both intersections during construction shift changes to ensure that adequate gaps in traffic will be provided for side-street movements along Moffett Park Drive.

Also, as discussed under Existing Conditions the intersections of the Mathilda Avenue corridor between Moffett Park Drive and Almanor Avenue are closely spaced and the corridor experiences operational issues beyond simple intersection LOS primarily due to vehicle weaving; therefore truck access to the site should be restricted during peak commute times (7 AM to 9 AM and 4 PM to 6 PM) to limit potential impacts to the operations of Mathilda Avenue.

PARKING IMPACTS

Project construction will be phased so that adequate parking for both the existing uses and project construction will be provided on-site. **Appendix H** provides a detailed summary of the projected parking demand and supply during each phase of project construction.

APPENDIX: MOFFETT PLACE TIA
AUGUST 2013

APPENDIX: MOFFETT PLACE TIA
AUGUST 2013

APPENDIX A:
EXISTING TRAFFIC COUNTS

Traffic Data Service

Campbell, CA
(408) 377-2988
tdsbay@cs.com

File Name : 1AM FINAL
Site Code : 00000001
Start Date : 2/12/2013
Page No : 1

Groups Printed- Vehicles

	Southbound					MOFFETT PARK DR Westbound					NB US-101 RAMP Northbound					MOFFETT PARK DR Eastbound					
Start Time	Right	Thru	Left	Peds	App. Total	Right	Thru	Left	Peds	App. Total	Right	Thru	Left	Peds	App. Total	Right	Thru	Left	Peds	App. Total	Int. Total
07:00 AM	0	0	0	0	0	0	83	0	0	83	0	0	0	0	0	1	18	0	0	19	102
07:15 AM	0	0	0	0	0	0	88	1	0	89	0	0	0	0	0	3	12	0	0	15	104
07:30 AM	0	0	0	0	0	0	157	2	0	159	0	0	0	0	0	1	19	0	0	20	179
07:45 AM	0	0	0	0	0	0	172	0	0	172	0	0	0	0	0	0	32	0	0	32	204
Total	0	0	0	0	0	0	500	3	0	503	0	0	0	0	0	5	81	0	0	86	589
08:00 AM	0	0	0	0	0	0	158	4	0	162	0	0	0	0	0	1	29	0	0	30	192
08:15 AM	0	0	0	0	0	0	167	4	0	171	0	0	0	0	0	0	18	0	0	18	189
08:30 AM	0	0	0	0	0	0	147	5	0	152	0	0	0	0	0	0	44	0	0	44	196
08:45 AM	0	0	0	0	0	0	194	3	0	197	0	0	0	0	0	0	34	0	0	34	231
Total	0	0	0	0	0	0	666	16	0	682	0	0	0	0	0	1	125	0	0	126	808
Grand Total	0	0	0	0	0	0	1166	19	0	1185	0	0	0	0	0	6	206	0	0	212	1397
Apprch %	0	0	0	0		0	98.4	1.6	0		0	0	0	0		2.8	97.2	0	0		
Total %	0	0	0	0	0	0	83.5	1.4	0	84.8	0	0	0	0	0	0.4	14.7	0	0	15.2	

	Southbound					MOFFETT PARK DR Westbound					NB US-101 RAMP Northbound					MOFFETT PARK DR Eastbound					
Start Time	Right	Thru	Left	Peds	App. Total	Right	Thru	Left	Peds	App. Total	Right	Thru	Left	Peds	App. Total	Right	Thru	Left	Peds	App. Total	Int. Total
Peak Hour Analysis From 07:00 AM to 08:45 AM - Peak 1 of 1																					
Peak Hour for Entire Intersection Begins at 08:00 AM																					
08:00 AM	0	0	0	0	0	0	158	4	0	162	0	0	0	0	0	**1**	29	0	0	30	192
08:15 AM	0	0	0	0	0	0	167	4	0	171	0	0	0	0	0	0	18	0	0	18	189
08:30 AM	0	0	0	0	0	0	147	**5**	0	152	0	0	0	0	0	0	**44**	0	0	**44**	196
08:45 AM	0	0	0	0	0	0	**194**	3	0	**197**	0	0	0	0	0	0	34	0	0	34	**231**
Total Volume	0	0	0	0	0	0	666	16	0	682	0	0	0	0	0	1	125	0	0	126	808
% App. Total	0	0	0	0		0	97.7	2.3	0		0	0	0	0		0.8	99.2	0	0		
PHF	.000	.000	.000	.000	.000	.000	.858	.800	.000	.865	.000	.000	.000	.000	.000	.250	.710	.000	.000	.716	.874

Traffic Data Service

Campbell, CA

(408) 377-2988

tdsbay@cs.com

File Name : 1AM FINAL
Site Code : 00000001
Start Date : 2/12/2013
Page No : 2

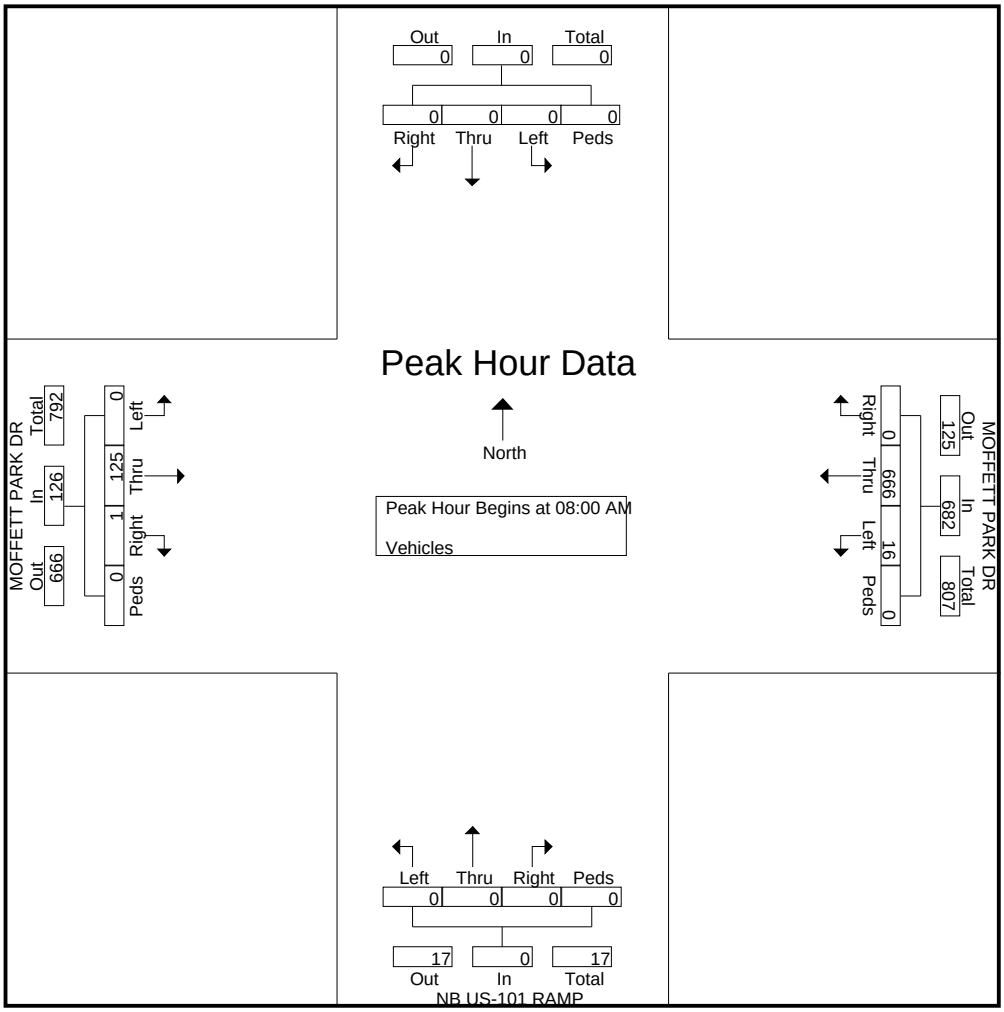

Traffic Data Service

Campbell, CA
(408) 377-2988
tdsbay@cs.com

File Name : 1AM FINAL
Site Code : 00000001
Start Date : 2/12/2013
Page No : 1

Groups Printed- Bikes

	Southbound					MOFFETT PARK DR Westbound					NB US-101 RAMP Northbound					MOFFETT PARK DR Eastbound					
Start Time	Right	Thru	Left	Peds	App. Total	Right	Thru	Left	Peds	App. Total	Right	Thru	Left	Peds	App. Total	Right	Thru	Left	Peds	App. Total	Int. Total
07:00 AM	0	0	0	0	0	0	0	0	0	0	0	0	0	0	0	0	2	0	0	2	2
07:15 AM	0	0	0	0	0	0	0	0	0	0	0	0	0	0	0	0	1	0	0	1	1
07:30 AM	0	0	0	0	0	0	1	0	0	1	0	0	0	0	0	0	0	0	0	0	1
07:45 AM	0	0	0	0	0	0	4	0	0	4	0	0	0	0	0	0	2	0	0	2	6
Total	0	0	0	0	0	0	5	0	0	5	0	0	0	0	0	0	5	0	0	5	10
08:00 AM	0	0	0	0	0	0	0	0	0	0	0	0	0	0	0	0	5	0	0	5	5
08:15 AM	0	0	0	0	0	0	1	0	0	1	0	0	0	0	0	0	2	0	0	2	3
08:30 AM	0	0	0	0	0	0	2	0	0	2	0	0	0	0	0	0	8	0	0	8	10
08:45 AM	0	0	0	0	0	0	1	0	0	1	0	0	0	0	0	0	2	0	0	2	3
Total	0	0	0	0	0	0	4	0	0	4	0	0	0	0	0	0	17	0	0	17	21
Grand Total	0	0	0	0	0	0	9	0	0	9	0	0	0	0	0	0	22	0	0	22	31
Apprch %	0	0	0	0		0	100	0	0		0	0	0	0		0	100	0	0		
Total %	0	0	0	0	0	0	29	0	0	29	0	0	0	0	0	0	71	0	0	71	

	Southbound					MOFFETT PARK DR Westbound					NB US-101 RAMP Northbound					MOFFETT PARK DR Eastbound					
Start Time	Right	Thru	Left	Peds	App. Total	Right	Thru	Left	Peds	App. Total	Right	Thru	Left	Peds	App. Total	Right	Thru	Left	Peds	App. Total	Int. Total
Peak Hour Analysis From 07:00 AM to 08:45 AM - Peak 1 of 1																					
Peak Hour for Entire Intersection Begins at 07:45 AM																					
07:45 AM	0	0	0	0	0	0	**4**	0	0	**4**	0	0	0	0	0	0	2	0	0	2	6
08:00 AM	0	0	0	0	0	0	0	0	0	0	0	0	0	0	0	0	5	0	0	5	5
08:15 AM	0	0	0	0	0	0	1	0	0	1	0	0	0	0	0	0	2	0	0	2	3
08:30 AM	0	0	0	0	0	0	2	0	0	2	0	0	0	0	0	0	**8**	0	0	**8**	**10**
Total Volume	0	0	0	0	0	0	7	0	0	7	0	0	0	0	0	0	17	0	0	17	24
% App. Total	0	0	0	0		0	100	0	0		0	0	0	0		0	100	0	0		
PHF	.000	.000	.000	.000	.000	.000	.438	.000	.000	.438	.000	.000	.000	.000	.000	.000	.531	.000	.000	.531	.600

Traffic Data Service

Campbell, CA
(408) 377-2988
tdsbay@cs.com

File Name : 1AM FINAL
Site Code : 00000001
Start Date : 2/12/2013
Page No : 2

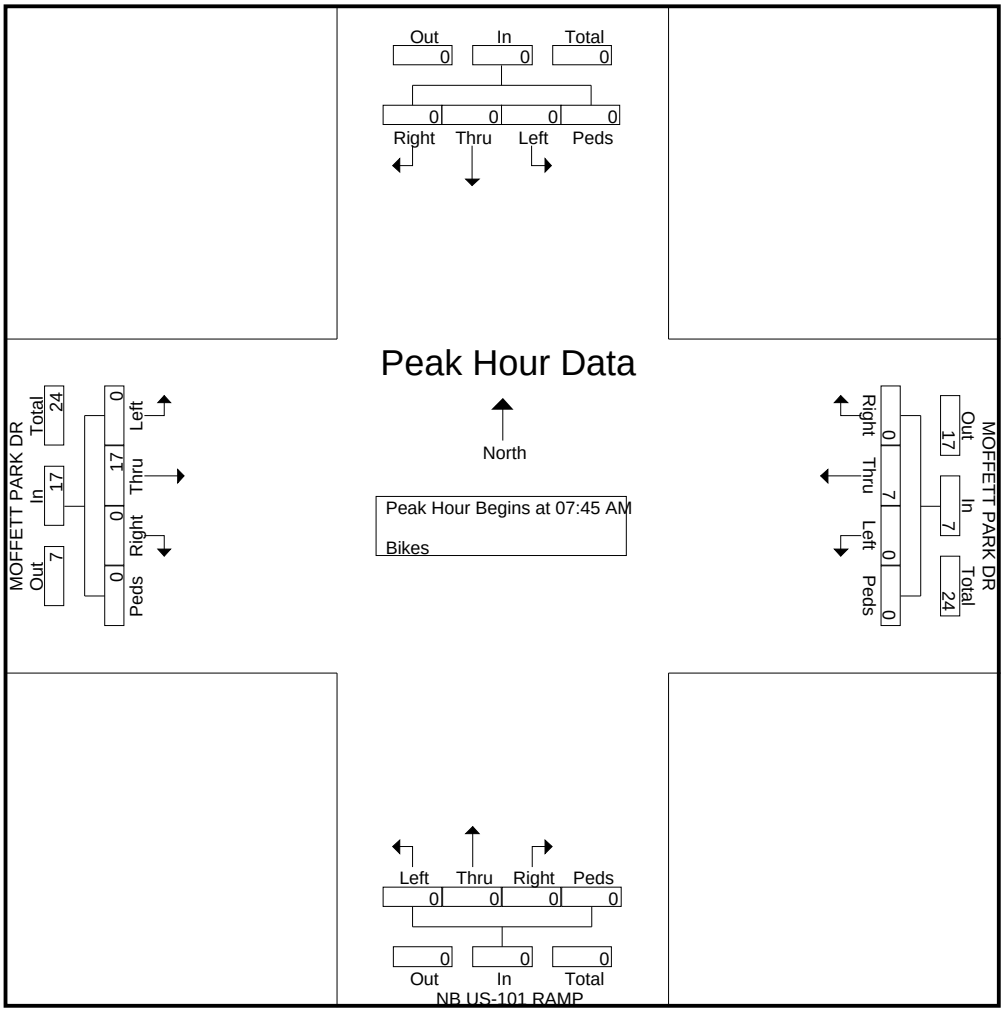

Traffic Data Service

Campbell, CA
(408) 377-2988
tdsbay@cs.com

File Name : 1PM FINAL
Site Code : 00000001
Start Date : 2/12/2013
Page No : 1

Groups Printed- Vehicles

	Southbound					MOFFETT PARK DR Westbound					NB US-101 RAMP Northbound					MOFFETT PARK DR Eastbound					
Start Time	Right	Thru	Left	Peds	App. Total	Right	Thru	Left	Peds	App. Total	Right	Thru	Left	Peds	App. Total	Right	Thru	Left	Peds	App. Total	Int. Total
04:30 PM	0	0	0	0	0	0	34	35	0	69	0	0	0	0	0	21	116	0	0	137	206
04:45 PM	0	0	0	0	0	0	29	44	0	73	0	0	0	0	0	27	124	0	0	151	224
Total	0	0	0	0	0	0	63	79	0	142	0	0	0	0	0	48	240	0	0	288	430
05:00 PM	0	0	0	0	0	0	53	42	0	95	0	0	0	0	0	24	146	0	0	170	265
05:15 PM	0	0	0	0	0	0	51	66	0	117	0	0	0	0	0	21	122	0	0	143	260
05:30 PM	0	0	0	0	0	0	56	57	0	113	0	0	0	0	0	15	115	0	0	130	243
05:45 PM	0	0	0	0	0	0	66	40	0	106	0	0	0	0	0	17	85	0	0	102	208
Total	0	0	0	0	0	0	226	205	0	431	0	0	0	0	0	77	468	0	0	545	976
06:00 PM	0	0	0	0	0	0	56	49	0	105	0	0	0	0	0	17	101	0	0	118	223
06:15 PM	0	0	0	0	0	0	61	37	0	98	0	0	0	0	0	5	89	0	0	94	192
Grand Total	0	0	0	0	0	0	406	370	0	776	0	0	0	0	0	147	898	0	0	1045	1821
Apprch %	0	0	0	0		0	52.3	47.7	0		0	0	0	0		14.1	85.9	0	0		
Total %	0	0	0	0	0	0	22.3	20.3	0	42.6	0	0	0	0	0	8.1	49.3	0	0	57.4	

	Southbound					MOFFETT PARK DR Westbound					NB US-101 RAMP Northbound					MOFFETT PARK DR Eastbound					
Start Time	Right	Thru	Left	Peds	App. Total	Right	Thru	Left	Peds	App. Total	Right	Thru	Left	Peds	App. Total	Right	Thru	Left	Peds	App. Total	Int. Total
Peak Hour Analysis From 04:30 PM to 06:15 PM - Peak 1 of 1																					
Peak Hour for Entire Intersection Begins at 04:45 PM																					
04:45 PM	0	0	0	0	0	0	29	44	0	73	0	0	0	0	0	**27**	124	0	0	151	224
05:00 PM	0	0	0	0	0	0	53	42	0	95	0	0	0	0	0	24	**146**	0	0	**170**	**265**
05:15 PM	0	0	0	0	0	0	51	**66**	0	**117**	0	0	0	0	0	21	122	0	0	143	260
05:30 PM	0	0	0	0	0	0	**56**	57	0	113	0	0	0	0	0	15	115	0	0	130	243
Total Volume	0	0	0	0	0	0	189	209	0	398	0	0	0	0	0	87	507	0	0	594	992
% App. Total	0	0	0	0		0	47.5	52.5	0		0	0	0	0		14.6	85.4	0	0		
PHF	.000	.000	.000	.000	.000	.000	.844	.792	.000	.850	.000	.000	.000	.000	.000	.806	.868	.000	.000	.874	.936

Traffic Data Service

Campbell, CA

(408) 377-2988

tdsbay@cs.com

File Name : 1PM FINAL
Site Code : 00000001
Start Date : 2/12/2013
Page No : 2

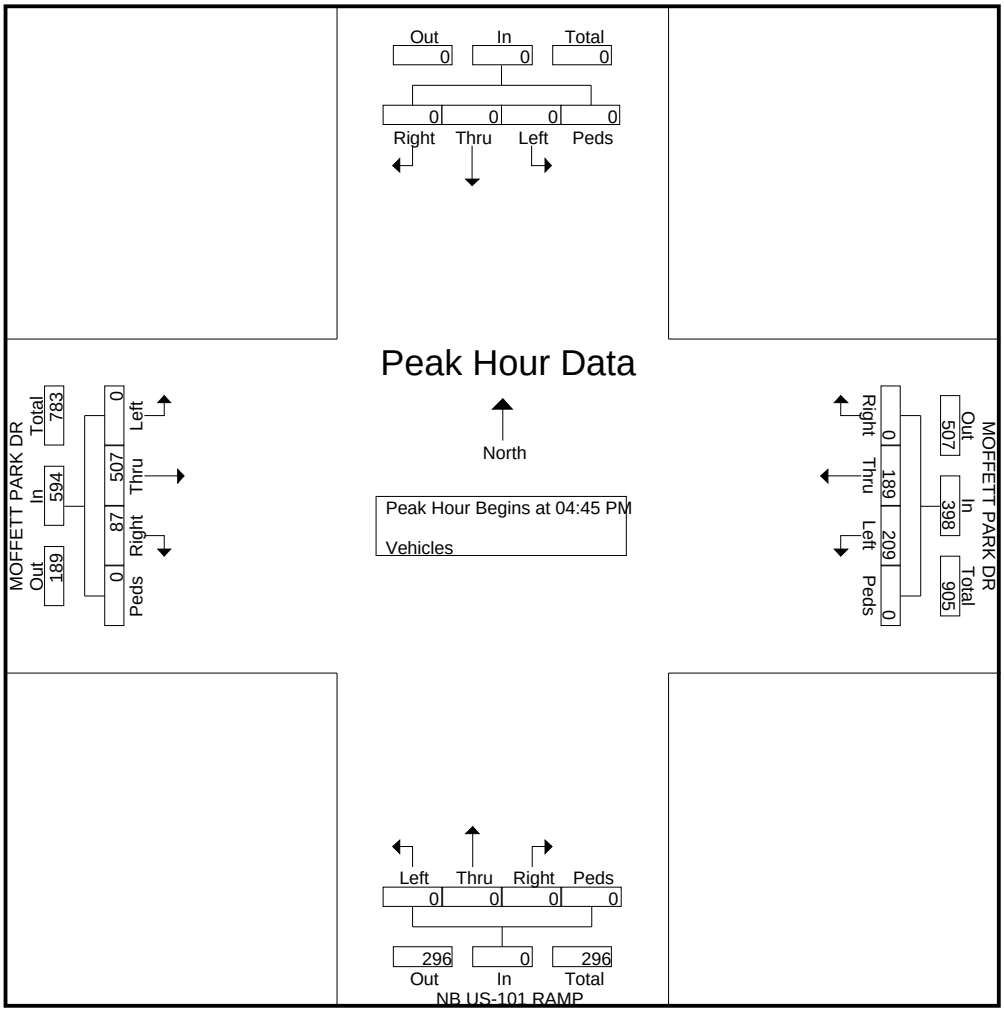

Traffic Data Service

Campbell, CA
(408) 377-2988
tdsbay@cs.com

File Name : 1PM FINAL
Site Code : 00000001
Start Date : 2/12/2013
Page No : 1

Groups Printed- Bikes

	Southbound					MOFFETT PARK DR Westbound					NB US-101 RAMP Northbound					MOFFETT PARK DR Eastbound					
Start Time	Right	Thru	Left	Peds	App. Total	Right	Thru	Left	Peds	App. Total	Right	Thru	Left	Peds	App. Total	Right	Thru	Left	Peds	App. Total	Int. Total
04:30 PM	0	0	0	0	0	0	1	0	0	1	0	0	0	0	0	0	0	0	0	0	1
04:45 PM	0	0	0	0	0	0	1	0	0	1	0	0	0	0	0	0	1	0	0	1	2
Total	0	0	0	0	0	0	2	0	0	2	0	0	0	0	0	0	1	0	0	1	3
05:00 PM	0	0	0	0	0	0	2	0	0	2	0	0	0	0	0	0	4	0	0	4	6
05:15 PM	0	0	0	0	0	0	4	0	0	4	0	0	0	0	0	0	2	0	0	2	6
05:30 PM	0	0	0	0	0	0	7	0	0	7	0	0	0	0	0	0	2	0	0	2	9
05:45 PM	0	0	0	0	0	0	3	0	0	3	0	0	0	0	0	0	5	0	0	5	8
Total	0	0	0	0	0	0	16	0	0	16	0	0	0	0	0	0	13	0	0	13	29
06:00 PM	0	0	0	0	0	0	6	0	0	6	0	0	0	0	0	0	0	0	0	0	6
06:15 PM	0	0	0	0	0	0	6	0	0	6	0	0	0	0	0	0	0	0	0	0	6
Grand Total	0	0	0	0	0	0	30	0	0	30	0	0	0	0	0	0	14	0	0	14	44
Apprch %	0	0	0	0		0	100	0	0		0	0	0	0		0	100	0	0		
Total %	0	0	0	0	0	0	68.2	0	0	68.2	0	0	0	0	0	0	31.8	0	0	31.8	

	Southbound					MOFFETT PARK DR Westbound					NB US-101 RAMP Northbound					MOFFETT PARK DR Eastbound					
Start Time	Right	Thru	Left	Peds	App. Total	Right	Thru	Left	Peds	App. Total	Right	Thru	Left	Peds	App. Total	Right	Thru	Left	Peds	App. Total	Int. Total
Peak Hour Analysis From 04:30 PM to 06:15 PM - Peak 1 of 1																					
Peak Hour for Entire Intersection Begins at 05:00 PM																					
05:00 PM	0	0	0	0	0	0	2	0	0	2	0	0	0	0	0	0	4	0	0	4	6
05:15 PM	0	0	0	0	0	0	4	0	0	4	0	0	0	0	0	0	2	0	0	2	6
05:30 PM	0	0	0	0	0	0	**7**	0	0	**7**	0	0	0	0	0	0	2	0	0	2	**9**
05:45 PM	0	0	0	0	0	0	3	0	0	3	0	0	0	0	0	0	**5**	0	0	**5**	8
Total Volume	0	0	0	0	0	0	16	0	0	16	0	0	0	0	0	0	13	0	0	13	29
% App. Total	0	0	0	0		0	100	0	0		0	0	0	0		0	100	0	0		
PHF	.000	.000	.000	.000	.000	.000	.571	.000	.000	.571	.000	.000	.000	.000	.000	.000	.650	.000	.000	.650	.806

Traffic Data Service

Campbell, CA
(408) 377-2988
tdsbay@cs.com

File Name : 1PM FINAL
Site Code : 00000001
Start Date : 2/12/2013
Page No : 2

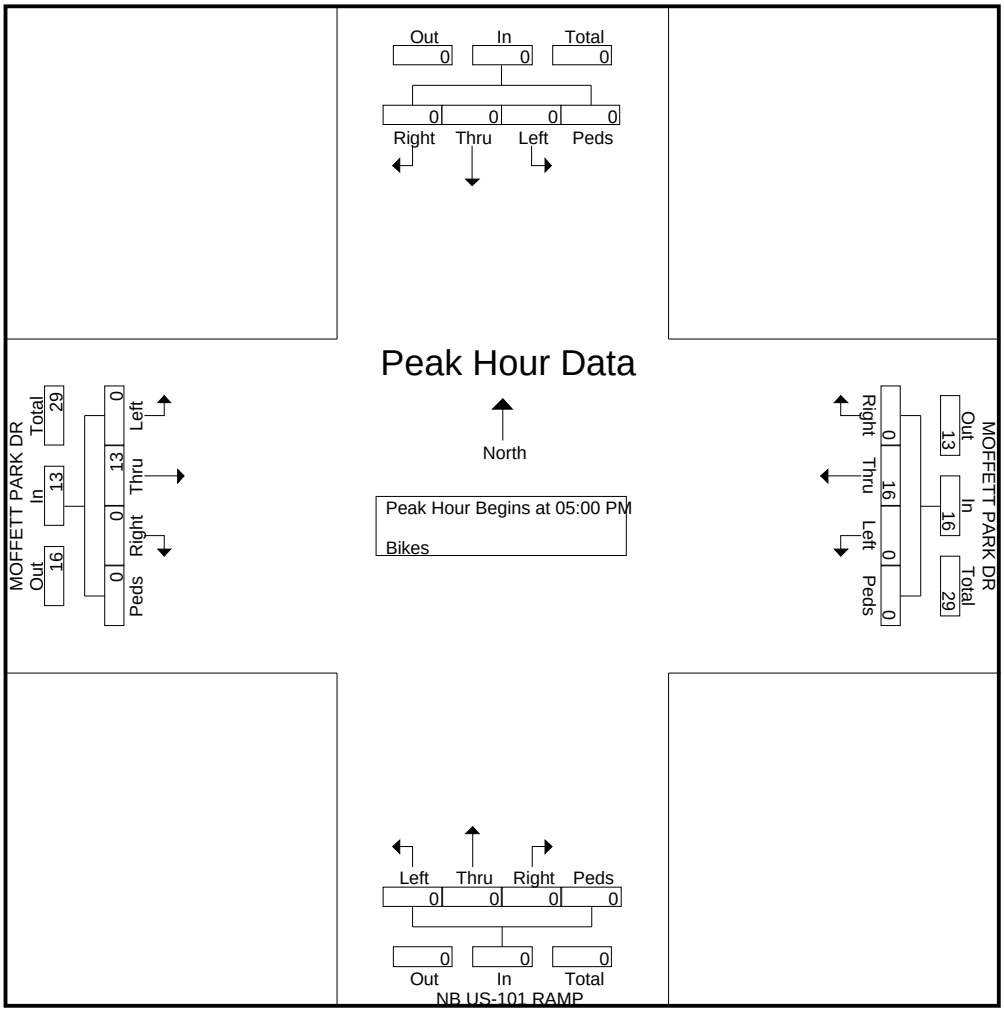

Traffic Data Service

Campbell, CA
(408) 377-2988
tdsbay@cs.com

File Name : 2AM FINAL
Site Code : 00000002
Start Date : 2/12/2013
Page No : 1

Groups Printed- Vehicles

	INNOVATION WAY Southbound					MOFFETT PARK DR Westbound					Northbound					MOFFETT PARK DR Eastbound					
Start Time	Right	Thru	Left	Peds	App. Total	Right	Thru	Left	Peds	App. Total	Right	Thru	Left	Peds	App. Total	Right	Thru	Left	Peds	App. Total	Int. Total
07:00 AM	1	0	0	0	1	6	84	0	0	90	0	0	0	0	0	0	18	1	0	19	110
07:15 AM	2	0	6	0	8	4	83	0	0	87	0	0	0	0	0	0	10	2	0	12	107
07:30 AM	2	0	6	0	8	10	161	0	0	171	0	0	0	0	0	0	20	0	0	20	199
07:45 AM	4	0	6	0	10	9	173	0	0	182	0	0	0	0	0	0	29	2	0	31	223
Total	9	0	18	0	27	29	501	0	0	530	0	0	0	0	0	0	77	5	0	82	639
08:00 AM	2	0	7	0	9	20	160	0	0	180	0	0	0	0	0	0	28	1	0	29	218
08:15 AM	4	0	5	0	9	19	167	0	0	186	0	0	0	0	0	0	17	1	0	18	213
08:30 AM	4	0	9	0	13	18	154	0	0	172	0	0	0	0	0	0	39	4	0	43	228
08:45 AM	5	0	6	0	11	20	188	0	0	208	0	0	0	0	0	0	31	4	0	35	254
Total	15	0	27	0	42	77	669	0	0	746	0	0	0	0	0	0	115	10	0	125	913
Grand Total	24	0	45	0	69	106	1170	0	0	1276	0	0	0	0	0	0	192	15	0	207	1552
Apprch %	34.8	0	65.2	0		8.3	91.7	0	0		0	0	0	0		0	92.8	7.2	0		
Total %	1.5	0	2.9	0	4.4	6.8	75.4	0	0	82.2	0	0	0	0	0	0	12.4	1	0	13.3	

	INNOVATION WAY Southbound					MOFFETT PARK DR Westbound					Northbound					MOFFETT PARK DR Eastbound					
Start Time	Right	Thru	Left	Peds	App. Total	Right	Thru	Left	Peds	App. Total	Right	Thru	Left	Peds	App. Total	Right	Thru	Left	Peds	App. Total	Int. Total
Peak Hour Analysis From 07:00 AM to 08:45 AM - Peak 1 of 1																					
Peak Hour for Entire Intersection Begins at 08:00 AM																					
08:00 AM	2	0	7	0	9	**20**	160	0	0	180	0	0	0	0	0	0	28	1	0	29	218
08:15 AM	4	0	5	0	9	19	167	0	0	186	0	0	0	0	0	0	17	1	0	18	213
08:30 AM	4	0	**9**	0	**13**	18	154	0	0	172	0	0	0	0	0	0	**39**	**4**	0	**43**	228
08:45 AM	**5**	0	6	0	11	20	**188**	0	0	**208**	0	0	0	0	0	0	31	4	0	35	**254**
Total Volume	15	0	27	0	42	77	669	0	0	746	0	0	0	0	0	0	115	10	0	125	913
% App. Total	35.7	0	64.3	0		10.3	89.7	0	0		0	0	0	0		0	92	8	0		
PHF	.750	.000	.750	.000	.808	.963	.890	.000	.000	.897	.000	.000	.000	.000	.000	.000	.737	.625	.000	.727	.899

Traffic Data Service

Campbell, CA

(408) 377-2988

tdsbay@cs.com

File Name : 2AM FINAL
Site Code : 00000002
Start Date : 2/12/2013
Page No : 2

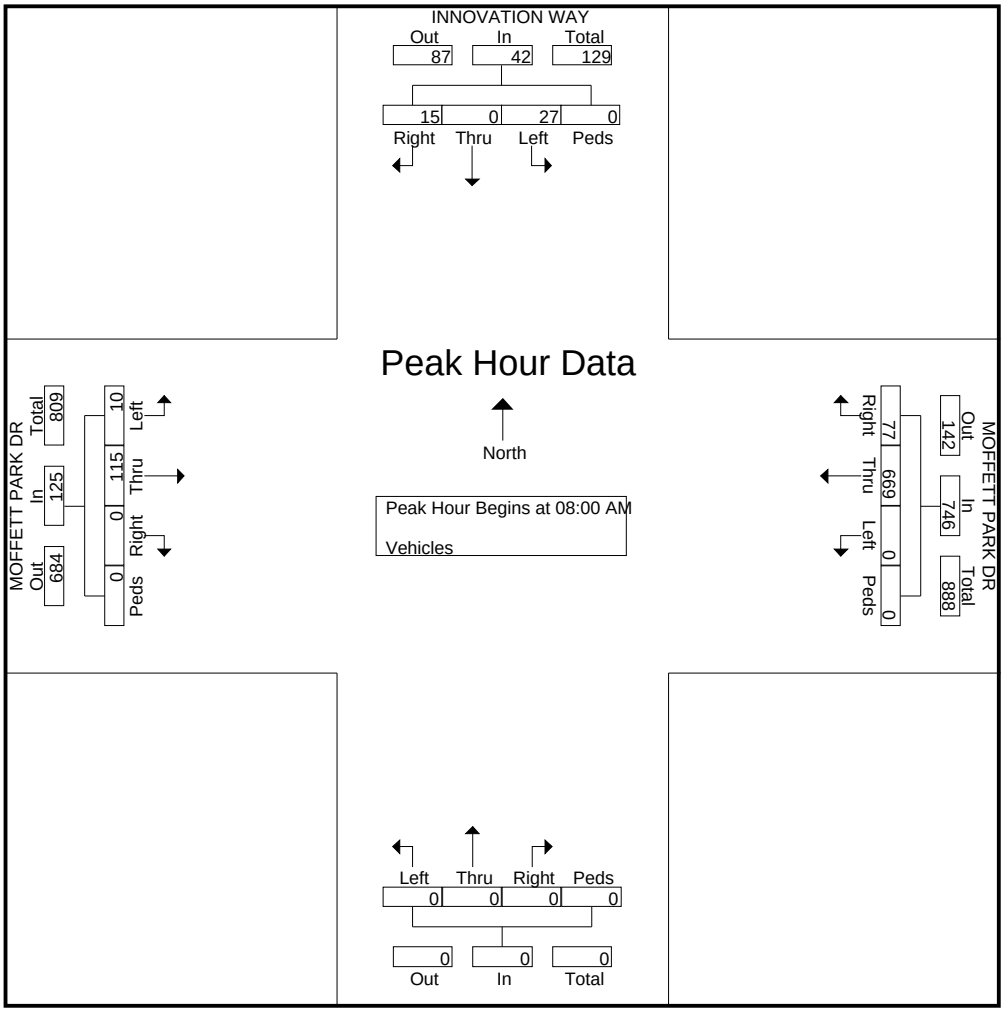

Traffic Data Service

Campbell, CA
(408) 377-2988
tdsbay@cs.com

File Name : 2AM FINAL
Site Code : 00000002
Start Date : 2/12/2013
Page No : 1

Groups Printed- Bikes

	INNOVATION WAY Southbound					MOFFETT PARK DR Westbound					Northbound					MOFFETT PARK DR Eastbound					
Start Time	Right	Thru	Left	Peds	App. Total	Right	Thru	Left	Peds	App. Total	Right	Thru	Left	Peds	App. Total	Right	Thru	Left	Peds	App. Total	Int. Total
07:00 AM	0	0	0	0	0	0	0	0	0	0	0	0	0	0	0	0	2	0	0	2	2
07:15 AM	0	0	0	0	0	0	0	0	0	0	0	0	0	0	0	0	1	0	0	1	1
07:30 AM	0	0	0	0	0	0	2	0	0	2	0	0	0	0	0	0	0	0	0	0	2
07:45 AM	0	0	0	0	0	0	3	0	0	3	0	0	0	0	0	0	2	0	0	2	5
Total	0	0	0	0	0	0	5	0	0	5	0	0	0	0	0	0	5	0	0	5	10
08:00 AM	0	0	0	0	0	0	0	0	0	0	0	0	0	0	0	0	4	0	0	4	4
08:15 AM	0	0	0	0	0	0	1	0	0	1	0	0	0	0	0	0	1	0	0	1	2
08:30 AM	0	0	0	0	0	0	2	0	0	2	0	0	0	0	0	0	7	1	0	8	10
08:45 AM	0	0	0	0	0	1	1	0	0	2	0	0	0	0	0	0	1	0	0	1	3
Total	0	0	0	0	0	1	4	0	0	5	0	0	0	0	0	0	13	1	0	14	19
Grand Total	0	0	0	0	0	1	9	0	0	10	0	0	0	0	0	0	18	1	0	19	29
Apprch %	0	0	0	0		10	90	0	0		0	0	0	0		0	94.7	5.3	0		
Total %	0	0	0	0	0	3.4	31	0	0	34.5	0	0	0	0	0	0	62.1	3.4	0	65.5	

	INNOVATION WAY Southbound					MOFFETT PARK DR Westbound					Northbound					MOFFETT PARK DR Eastbound					
Start Time	Right	Thru	Left	Peds	App. Total	Right	Thru	Left	Peds	App. Total	Right	Thru	Left	Peds	App. Total	Right	Thru	Left	Peds	App. Total	Int. Total
Peak Hour Analysis From 07:00 AM to 08:45 AM - Peak 1 of 1																					
Peak Hour for Entire Intersection Begins at 07:45 AM																					
07:45 AM	0	0	0	0	0	0	**3**	0	0	**3**	0	0	0	0	0	0	2	0	0	2	5
08:00 AM	0	0	0	0	0	0	0	0	0	0	0	0	0	0	0	0	4	0	0	4	4
08:15 AM	0	0	0	0	0	0	1	0	0	1	0	0	0	0	0	0	1	0	0	1	2
08:30 AM	0	0	0	0	0	0	2	0	0	2	0	0	0	0	0	0	**7**	**1**	0	**8**	**10**
Total Volume	0	0	0	0	0	0	6	0	0	6	0	0	0	0	0	0	14	1	0	15	21
% App. Total	0	0	0	0		0	100	0	0		0	0	0	0		0	93.3	6.7	0		
PHF	.000	.000	.000	.000	.000	.000	.500	.000	.000	.500	.000	.000	.000	.000	.000	.000	.500	.250	.000	.469	.525

Traffic Data Service

Campbell, CA
(408) 377-2988
tdsbay@cs.com

File Name : 2AM FINAL
Site Code : 00000002
Start Date : 2/12/2013
Page No : 2

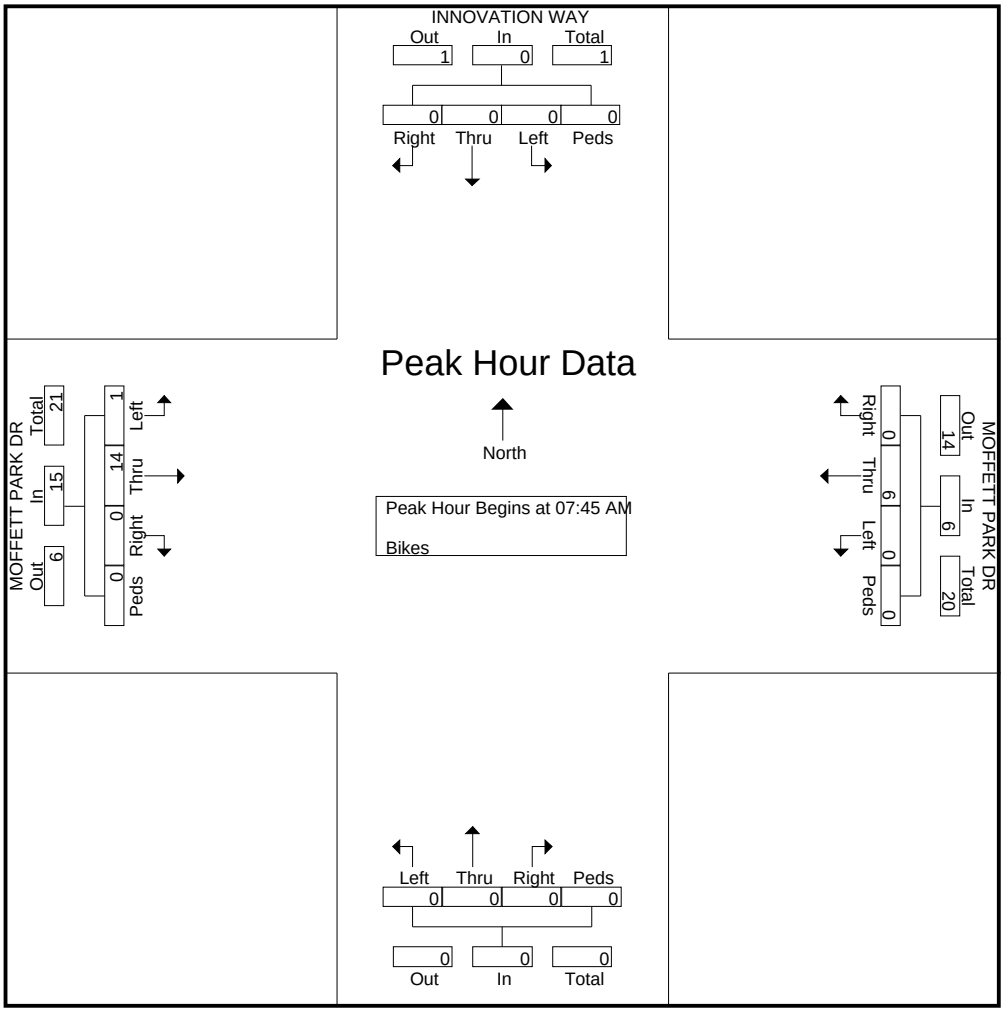

Traffic Data Service

Campbell, CA
(408) 377-2988
tdsbay@cs.com

File Name : 2PM FINAL
Site Code : 00000002
Start Date : 2/12/2013
Page No : 1

Groups Printed- Vehicles

	INNOVATION WAY Southbound					MOFFETT PARK DR Westbound					Northbound					MOFFETT PARK DR Eastbound					
Start Time	Right	Thru	Left	Peds	App. Total	Right	Thru	Left	Peds	App. Total	Right	Thru	Left	Peds	App. Total	Right	Thru	Left	Peds	App. Total	Int. Total
04:30 PM	4	0	8	0	12	2	61	0	0	63	0	0	0	0	0	0	107	2	0	109	184
04:45 PM	5	0	14	0	19	1	68	0	0	69	0	0	0	0	0	0	109	0	0	109	197
Total	9	0	22	0	31	3	129	0	0	132	0	0	0	0	0	0	216	2	0	218	381
05:00 PM	8	0	15	0	23	3	88	0	0	91	0	0	0	0	0	0	126	1	0	127	241
05:15 PM	16	0	16	0	32	4	98	0	0	102	0	0	0	0	0	0	112	0	0	112	246
05:30 PM	17	0	18	0	35	2	98	0	0	100	0	0	0	0	0	0	109	0	0	109	244
05:45 PM	5	0	17	0	22	3	104	0	0	107	0	0	0	0	0	0	87	2	0	89	218
Total	46	0	66	0	112	12	388	0	0	400	0	0	0	0	0	0	434	3	0	437	949
06:00 PM	8	0	15	0	23	1	100	0	0	101	0	0	0	0	0	0	102	0	0	102	226
06:15 PM	15	0	18	0	33	2	83	0	0	85	0	0	0	0	0	0	89	0	0	89	207
Grand Total	78	0	121	0	199	18	700	0	0	718	0	0	0	0	0	0	841	5	0	846	1763
Apprch %	39.2	0	60.8	0		2.5	97.5	0	0		0	0	0	0		0	99.4	0.6	0		
Total %	4.4	0	6.9	0	11.3	1	39.7	0	0	40.7	0	0	0	0	0	0	47.7	0.3	0	48	

	INNOVATION WAY Southbound					MOFFETT PARK DR Westbound					Northbound					MOFFETT PARK DR Eastbound					
Start Time	Right	Thru	Left	Peds	App. Total	Right	Thru	Left	Peds	App. Total	Right	Thru	Left	Peds	App. Total	Right	Thru	Left	Peds	App. Total	Int. Total
Peak Hour Analysis From 04:30 PM to 06:15 PM - Peak 1 of 1																					
Peak Hour for Entire Intersection Begins at 05:00 PM																					
05:00 PM	8	0	15	0	23	3	88	0	0	91	0	0	0	0	0	0	**126**	1	0	**127**	241
05:15 PM	16	0	16	0	32	**4**	98	0	0	102	0	0	0	0	0	0	112	0	0	112	**246**
05:30 PM	**17**	0	**18**	0	**35**	2	98	0	0	100	0	0	0	0	0	0	109	0	0	109	244
05:45 PM	5	0	17	0	22	3	**104**	0	0	**107**	0	0	0	0	0	0	87	**2**	0	89	218
Total Volume	46	0	66	0	112	12	388	0	0	400	0	0	0	0	0	0	434	3	0	437	949
% App. Total	41.1	0	58.9	0		3	97	0	0		0	0	0	0		0	99.3	0.7	0		
PHF	.676	.000	.917	.000	.800	.750	.933	.000	.000	.935	.000	.000	.000	.000	.000	.000	.861	.375	.000	.860	.964

Traffic Data Service

Campbell, CA
(408) 377-2988
tdsbay@cs.com

File Name : 2PM FINAL
Site Code : 00000002
Start Date : 2/12/2013
Page No : 2

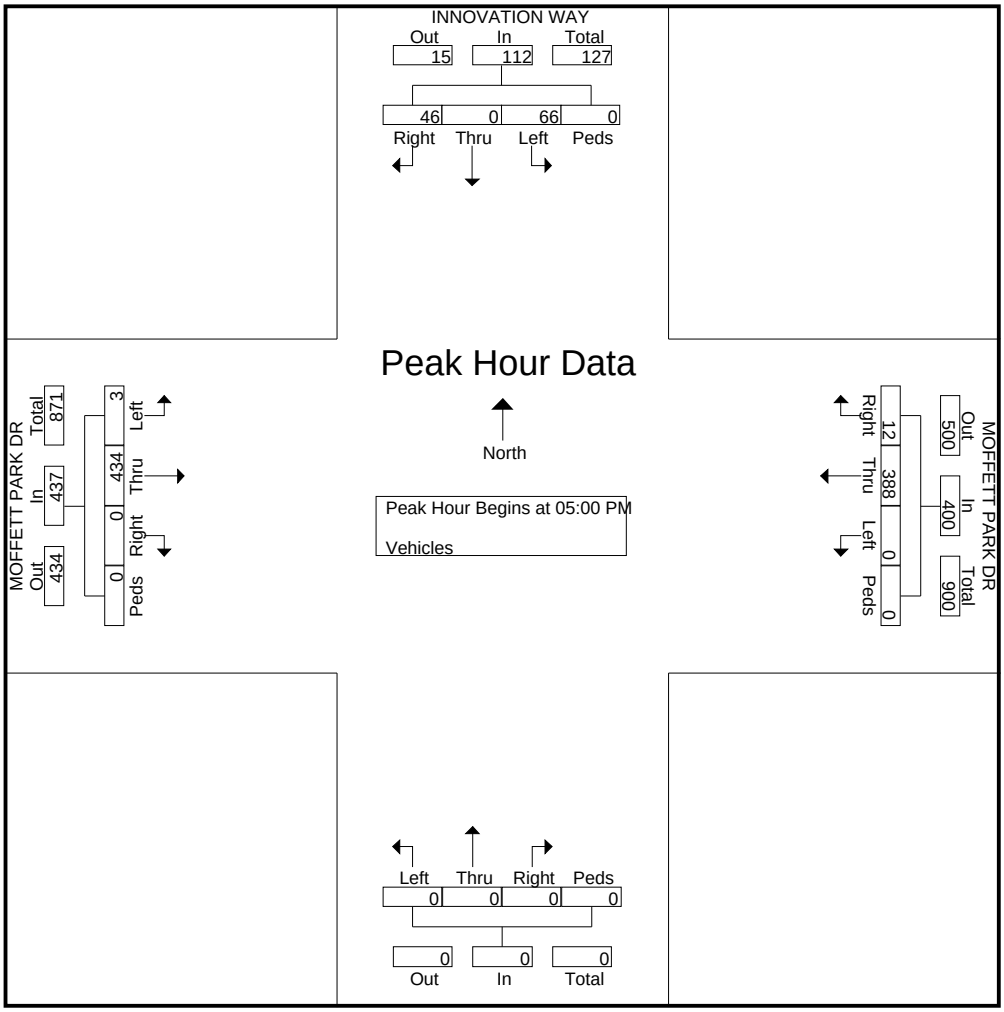

Traffic Data Service

Campbell, CA
(408) 377-2988
tdsbay@cs.com

File Name : 2PM FINAL
Site Code : 00000002
Start Date : 2/12/2013
Page No : 1

Groups Printed- Bikes

	INNOVATION WAY Southbound					MOFFETT PARK DR Westbound					Northbound					MOFFETT PARK DR Eastbound					
Start Time	Right	Thru	Left	Peds	App. Total	Right	Thru	Left	Peds	App. Total	Right	Thru	Left	Peds	App. Total	Right	Thru	Left	Peds	App. Total	Int. Total
04:30 PM	0	0	0	0	0	0	1	0	0	1	0	0	0	0	0	0	0	0	0	0	1
04:45 PM	0	0	0	0	0	1	1	0	0	2	0	0	0	0	0	0	1	0	0	1	3
Total	0	0	0	0	0	1	2	0	0	3	0	0	0	0	0	0	1	0	0	1	4
05:00 PM	0	0	0	0	0	0	2	0	0	2	0	0	0	0	0	0	3	0	0	3	5
05:15 PM	1	0	0	0	1	0	4	0	0	4	0	0	0	0	0	0	2	0	0	2	7
05:30 PM	1	0	1	0	2	0	5	0	0	5	0	0	0	0	0	0	3	0	0	3	10
05:45 PM	0	0	1	0	1	0	4	0	0	4	0	0	0	0	0	0	5	0	0	5	10
Total	2	0	2	0	4	0	15	0	0	15	0	0	0	0	0	0	13	0	0	13	32
06:00 PM	0	0	0	0	0	0	7	0	0	7	0	0	0	0	0	0	0	0	0	0	7
06:15 PM	0	0	0	0	0	0	6	0	0	6	0	0	0	0	0	0	0	0	0	0	6
Grand Total	2	0	2	0	4	1	30	0	0	31	0	0	0	0	0	0	14	0	0	14	49
Apprch %	50	0	50	0		3.2	96.8	0	0		0	0	0	0		0	100	0	0		
Total %	4.1	0	4.1	0	8.2	2	61.2	0	0	63.3	0	0	0	0	0	0	28.6	0	0	28.6	

	INNOVATION WAY Southbound					MOFFETT PARK DR Westbound					Northbound					MOFFETT PARK DR Eastbound					
Start Time	Right	Thru	Left	Peds	App. Total	Right	Thru	Left	Peds	App. Total	Right	Thru	Left	Peds	App. Total	Right	Thru	Left	Peds	App. Total	Int. Total
Peak Hour Analysis From 04:30 PM to 06:15 PM - Peak 1 of 1																					
Peak Hour for Entire Intersection Begins at 05:15 PM																					
05:15 PM	**1**	0	0	0	1	0	4	0	0	4	0	0	0	0	0	0	2	0	0	2	7
05:30 PM	1	0	**1**	0	**2**	0	5	0	0	5	0	0	0	0	0	0	3	0	0	3	**10**
05:45 PM	0	0	1	0	1	0	4	0	0	4	0	0	0	0	0	0	**5**	0	0	**5**	10
06:00 PM	0	0	0	0	0	0	**7**	0	0	**7**	0	0	0	0	0	0	0	0	0	0	7
Total Volume	2	0	2	0	4	0	20	0	0	20	0	0	0	0	0	0	10	0	0	10	34
% App. Total	50	0	50	0		0	100	0	0		0	0	0	0		0	100	0	0		
PHF	.500	.000	.500	.000	.500	.000	.714	.000	.000	.714	.000	.000	.000	.000	.000	.000	.500	.000	.000	.500	.850

Traffic Data Service

Campbell, CA
(408) 377-2988
tdsbay@cs.com

File Name : 2PM FINAL
Site Code : 00000002
Start Date : 2/12/2013
Page No : 2

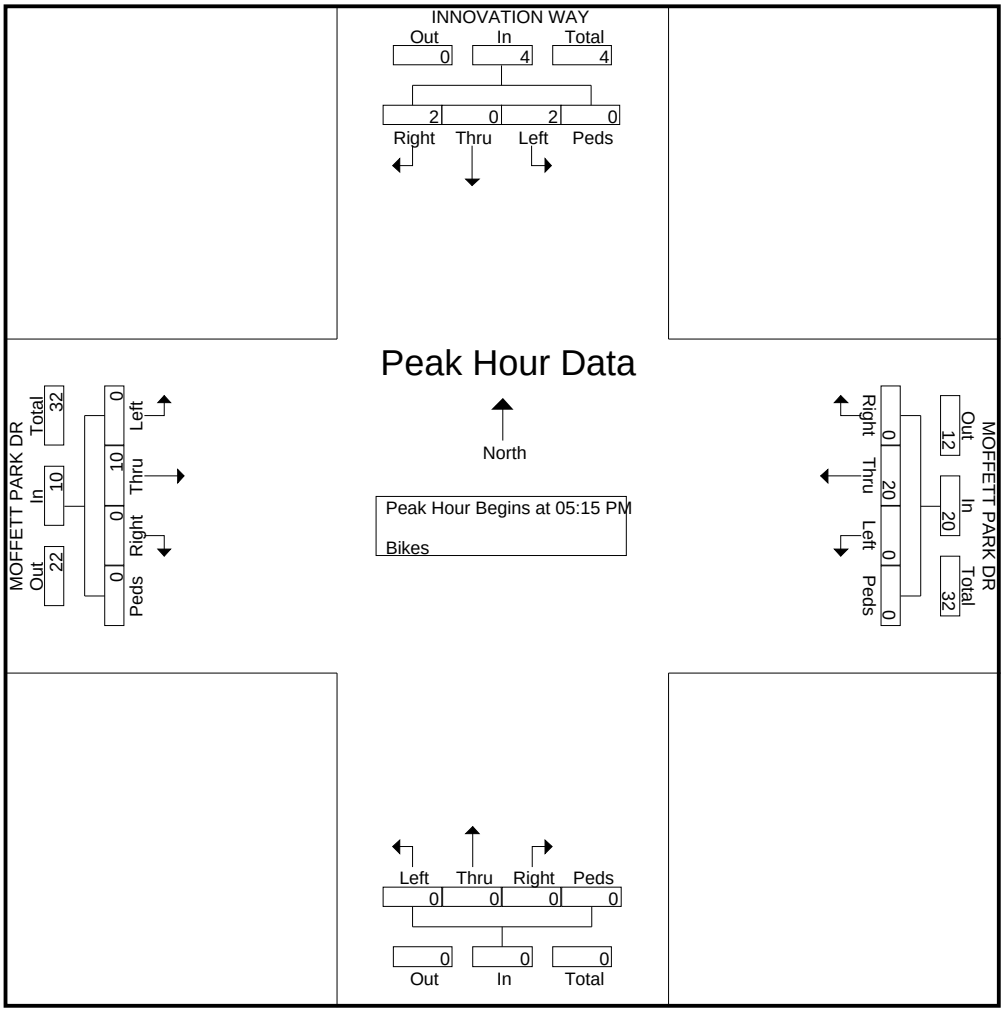

Traffic Data Service

Campbell, CA
(408) 377-2988
tdsbay@cs.com

File Name : 3AM FINAL
Site Code : 00000003
Start Date : 2/12/2013
Page No : 1

Groups Printed- Vehicles

	MATHILDA AVE Southbound					JAVA DR Westbound					MATHILDA AVE Northbound					LOCKHEED MARTIN WY Eastbound					
Start Time	Right	Thru	Left	Peds	App. Total	Right	Thru	Left	Peds	App. Total	Right	Thru	Left	Peds	App. Total	Right	Thru	Left	Peds	App. Total	Int. Total
07:00 AM	44	16	1	0	61	1	35	11	0	47	1	55	97	0	153	1	1	0	0	2	263
07:15 AM	65	13	1	0	79	1	28	8	0	37	8	66	117	0	191	8	2	3	0	13	320
07:30 AM	39	19	0	0	58	3	27	17	0	47	6	51	89	0	146	2	1	1	0	4	255
07:45 AM	54	23	0	0	77	2	36	11	0	49	14	81	118	0	213	9	7	3	0	19	358
Total	202	71	2	0	275	7	126	47	0	180	29	253	421	0	703	20	11	7	0	38	1196
08:00 AM	53	39	0	0	92	1	46	17	0	64	13	75	81	0	169	11	4	2	0	17	342
08:15 AM	40	41	2	1	84	2	26	5	0	33	12	102	66	0	180	4	8	4	1	17	314
08:30 AM	31	28	2	0	61	1	30	15	0	46	10	65	53	0	128	7	3	3	0	13	248
08:45 AM	29	44	1	4	78	1	27	14	0	42	9	82	74	0	165	7	6	2	0	15	300
Total	153	152	5	5	315	5	129	51	0	185	44	324	274	0	642	29	21	11	1	62	1204
Grand Total	355	223	7	5	590	12	255	98	0	365	73	577	695	0	1345	49	32	18	1	100	2400
Apprch %	60.2	37.8	1.2	0.8		3.3	69.9	26.8	0		5.4	42.9	51.7	0		49	32	18	1		
Total %	14.8	9.3	0.3	0.2	24.6	0.5	10.6	4.1	0	15.2	3	24	29	0	56	2	1.3	0.8	0	4.2	

	MATHILDA AVE Southbound					JAVA DR Westbound					MATHILDA AVE Northbound					LOCKHEED MARTIN WY Eastbound					
Start Time	Right	Thru	Left	Peds	App. Total	Right	Thru	Left	Peds	App. Total	Right	Thru	Left	Peds	App. Total	Right	Thru	Left	Peds	App. Total	Int. Total
Peak Hour Analysis From 07:00 AM to 08:45 AM - Peak 1 of 1																					
Peak Hour for Entire Intersection Begins at 07:15 AM																					
07:15 AM	**65**	13	**1**	0	79	1	28	8	0	37	8	66	117	0	191	8	2	**3**	0	13	320
07:30 AM	39	19	0	0	58	**3**	27	**17**	0	47	6	51	89	0	146	2	1	1	0	4	255
07:45 AM	54	23	0	0	77	2	36	11	0	49	**14**	**81**	**118**	0	**213**	9	**7**	3	0	**19**	**358**
08:00 AM	53	**39**	0	0	**92**	1	**46**	17	0	**64**	13	75	81	0	169	**11**	4	2	0	17	342
Total Volume	211	94	1	0	306	7	137	53	0	197	41	273	405	0	719	30	14	9	0	53	1275
% App. Total	69	30.7	0.3	0		3.6	69.5	26.9	0		5.7	38	56.3	0		56.6	26.4	17	0		
PHF	.812	.603	.250	.000	.832	.583	.745	.779	.000	.770	.732	.843	.858	.000	.844	.682	.500	.750	.000	.697	.890

Traffic Data Service

Campbell, CA
(408) 377-2988
tdsbay@cs.com

File Name : 3AM FINAL
Site Code : 00000003
Start Date : 2/12/2013
Page No : 2

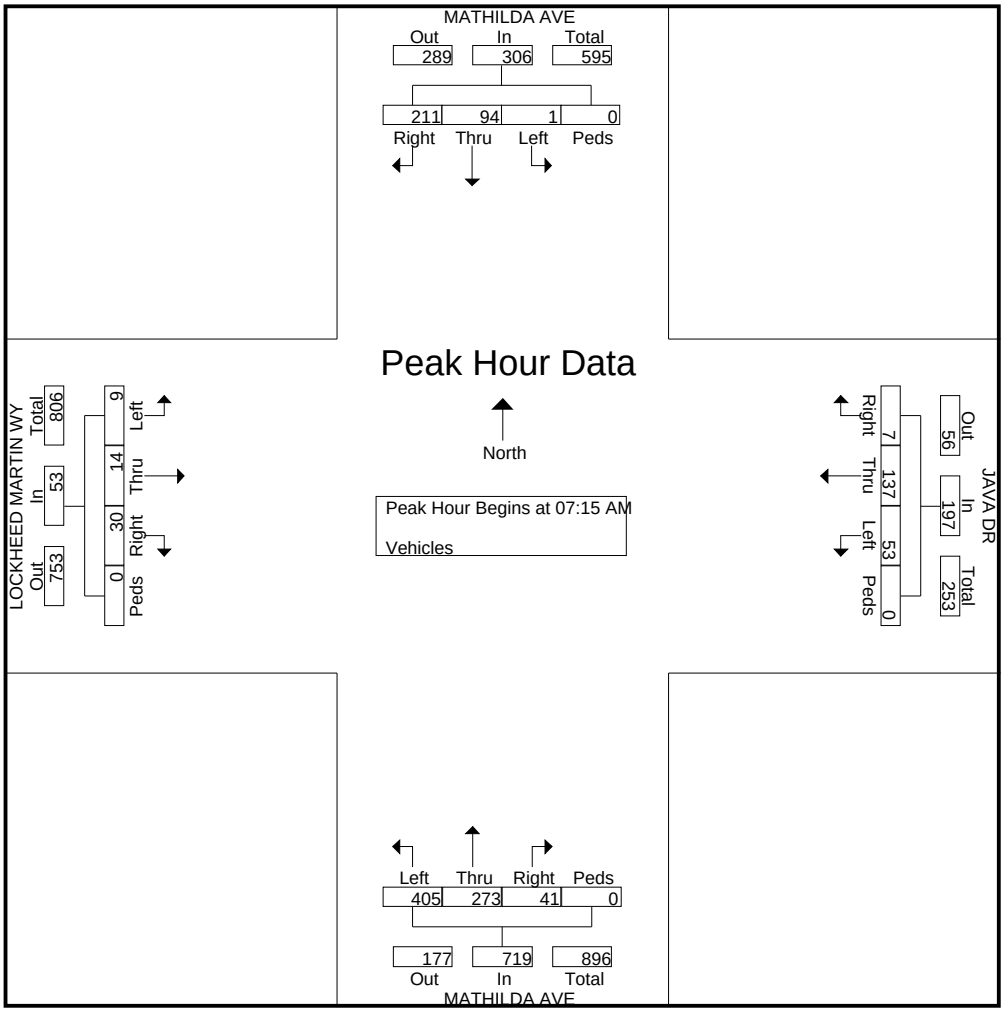

Traffic Data Service

Campbell, CA
(408) 377-2988
tdsbay@cs.com

File Name : 3AM FINAL
Site Code : 00000003
Start Date : 2/12/2013
Page No : 1

Groups Printed- Bikes

	MATHILDA AVE Southbound					JAVA DR Westbound					MATHILDA AVE Northbound					LOCKHEED MARTIN WY Eastbound					
Start Time	Right	Thru	Left	Peds	App. Total	Right	Thru	Left	Peds	App. Total	Right	Thru	Left	Peds	App. Total	Right	Thru	Left	Peds	App. Total	Int. Total
07:00 AM	0	0	0	1	1	0	0	0	1	1	0	0	0	3	3	0	0	0	0	0	5
07:15 AM	0	0	0	0	0	0	0	0	0	0	0	0	0	1	1	0	0	0	1	1	2
07:30 AM	0	0	0	0	0	0	0	0	0	0	0	0	0	0	0	0	0	0	0	0	0
07:45 AM	0	0	0	0	0	0	0	0	0	0	0	0	0	0	0	0	0	0	0	0	0
Total	0	0	0	1	1	0	0	0	1	1	0	0	0	4	4	0	0	0	1	1	7
08:00 AM	0	0	0	0	0	0	0	0	0	0	0	0	0	0	0	0	0	0	0	0	0
08:15 AM	0	0	0	0	0	0	0	0	0	0	0	0	0	0	0	0	0	0	0	0	0
08:30 AM	0	0	0	0	0	0	0	0	0	0	0	0	0	0	0	0	0	0	0	0	0
08:45 AM	0	0	0	0	0	0	0	0	0	0	0	0	0	0	0	0	0	0	0	0	0
Total	0	0	0	0	0	0	0	0	0	0	0	0	0	0	0	0	0	0	0	0	0
Grand Total	0	0	0	1	1	0	0	0	1	1	0	0	0	4	4	0	0	0	1	1	7
Apprch %	0	0	0	100		0	0	0	100		0	0	0	100		0	0	0	100		
Total %	0	0	0	14.3	14.3	0	0	0	14.3	14.3	0	0	0	57.1	57.1	0	0	0	14.3	14.3	

	MATHILDA AVE Southbound					JAVA DR Westbound					MATHILDA AVE Northbound					LOCKHEED MARTIN WY Eastbound					
Start Time	Right	Thru	Left	Peds	App. Total	Right	Thru	Left	Peds	App. Total	Right	Thru	Left	Peds	App. Total	Right	Thru	Left	Peds	App. Total	Int. Total
Peak Hour Analysis From 07:00 AM to 08:45 AM - Peak 1 of 1																					
Peak Hour for Entire Intersection Begins at 07:00 AM																					
07:00 AM	0	0	0	**1**	**1**	0	0	0	**1**	**1**	0	0	0	**3**	**3**	0	0	0	0	0	**5**
07:15 AM	0	0	0	0	0	0	0	0	0	0	0	0	0	1	1	0	0	0	**1**	**1**	2
07:30 AM	0	0	0	0	0	0	0	0	0	0	0	0	0	0	0	0	0	0	0	0	0
07:45 AM	0	0	0	0	0	0	0	0	0	0	0	0	0	0	0	0	0	0	0	0	0
Total Volume	0	0	0	1	1	0	0	0	1	1	0	0	0	4	4	0	0	0	1	1	7
% App. Total	0	0	0	100		0	0	0	100		0	0	0	100		0	0	0	100		
PHF	.000	.000	.000	.250	.250	.000	.000	.000	.250	.250	.000	.000	.000	.333	.333	.000	.000	.000	.250	.250	.350

Traffic Data Service

Campbell, CA
(408) 377-2988
tdsbay@cs.com

File Name : 3AM FINAL
Site Code : 00000003
Start Date : 2/12/2013
Page No : 2

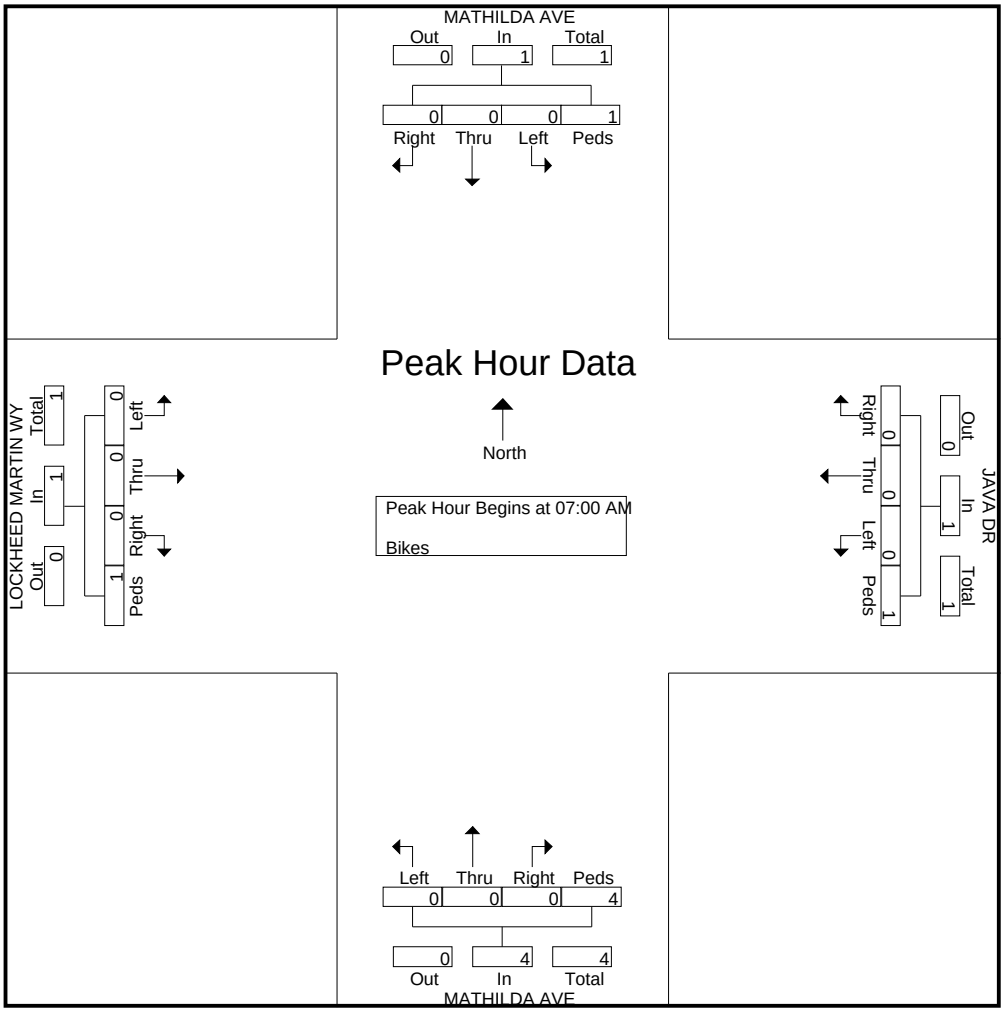

Traffic Data Service

Campbell, CA
(408) 377-2988
tdsbay@cs.com

File Name : 3PM FINAL
Site Code : 00000003
Start Date : 2/12/2013
Page No : 1

Groups Printed- Vehicles

	MATHILDA AVE Southbound					JAVA DR Westbound					MATHILDA AVE Northbound					LOCKHEED MARTIN WY Eastbound					
Start Time	Right	Thru	Left	Peds	App. Total	Right	Thru	Left	Peds	App. Total	Right	Thru	Left	Peds	App. Total	Right	Thru	Left	Peds	App. Total	Int. Total
04:30 PM	0	102	10	0	112	3	3	16	0	22	11	26	12	0	49	82	23	28	0	133	316
04:45 PM	6	103	8	1	118	4	4	26	6	40	9	23	11	1	44	103	19	34	0	156	358
Total	6	205	18	1	230	7	7	42	6	62	20	49	23	1	93	185	42	62	0	289	674
05:00 PM	1	93	1	0	95	2	2	22	2	28	8	21	5	0	34	115	30	42	0	187	344
05:15 PM	2	109	6	0	117	0	4	28	3	35	16	21	8	0	45	143	39	38	1	221	418
05:30 PM	3	97	0	0	100	3	6	45	7	61	14	29	9	0	52	115	60	36	0	211	424
05:45 PM	1	100	8	0	109	1	2	39	6	48	21	33	9	0	63	109	41	31	6	187	407
Total	7	399	15	0	421	6	14	134	18	172	59	104	31	0	194	482	170	147	7	806	1593
06:00 PM	3	89	6	0	98	0	2	29	14	45	22	27	7	0	56	86	20	27	1	134	333
06:15 PM	2	99	4	0	105	1	1	30	9	41	19	29	8	0	56	88	22	21	1	132	334
Grand Total	18	792	43	1	854	14	24	235	47	320	120	209	69	1	399	841	254	257	9	1361	2934
Apprch %	2.1	92.7	5	0.1		4.4	7.5	73.4	14.7		30.1	52.4	17.3	0.3		61.8	18.7	18.9	0.7		
Total %	0.6	27	1.5	0	29.1	0.5	0.8	8	1.6	10.9	4.1	7.1	2.4	0	13.6	28.7	8.7	8.8	0.3	46.4	

	MATHILDA AVE Southbound					JAVA DR Westbound					MATHILDA AVE Northbound					LOCKHEED MARTIN WY Eastbound					
Start Time	Right	Thru	Left	Peds	App. Total	Right	Thru	Left	Peds	App. Total	Right	Thru	Left	Peds	App. Total	Right	Thru	Left	Peds	App. Total	Int. Total
Peak Hour Analysis From 04:30 PM to 05:45 PM - Peak 1 of 1																					
Peak Hour for Entire Intersection Begins at 05:00 PM																					
05:00 PM	1	93	1	0	95	2	2	22	2	28	8	21	5	0	34	115	30	**42**	0	187	344
05:15 PM	2	**109**	6	0	**117**	0	4	28	3	35	16	21	8	0	45	**143**	39	38	1	**221**	418
05:30 PM	**3**	97	0	0	100	**3**	**6**	**45**	**7**	**61**	14	29	**9**	0	52	115	**60**	36	0	211	**424**
05:45 PM	1	100	**8**	0	109	1	2	39	6	48	**21**	**33**	9	0	**63**	109	41	31	**6**	187	407
Total Volume	7	399	15	0	421	6	14	134	18	172	59	104	31	0	194	482	170	147	7	806	1593
% App. Total	1.7	94.8	3.6	0		3.5	8.1	77.9	10.5		30.4	53.6	16	0		59.8	21.1	18.2	0.9		
PHF	.583	.915	.469	.000	.900	.500	.583	.744	.643	.705	.702	.788	.861	.000	.770	.843	.708	.875	.292	.912	.939

Traffic Data Service

Campbell, CA
(408) 377-2988
tdsbay@cs.com

File Name : 3PM FINAL
Site Code : 00000003
Start Date : 2/12/2013
Page No : 2

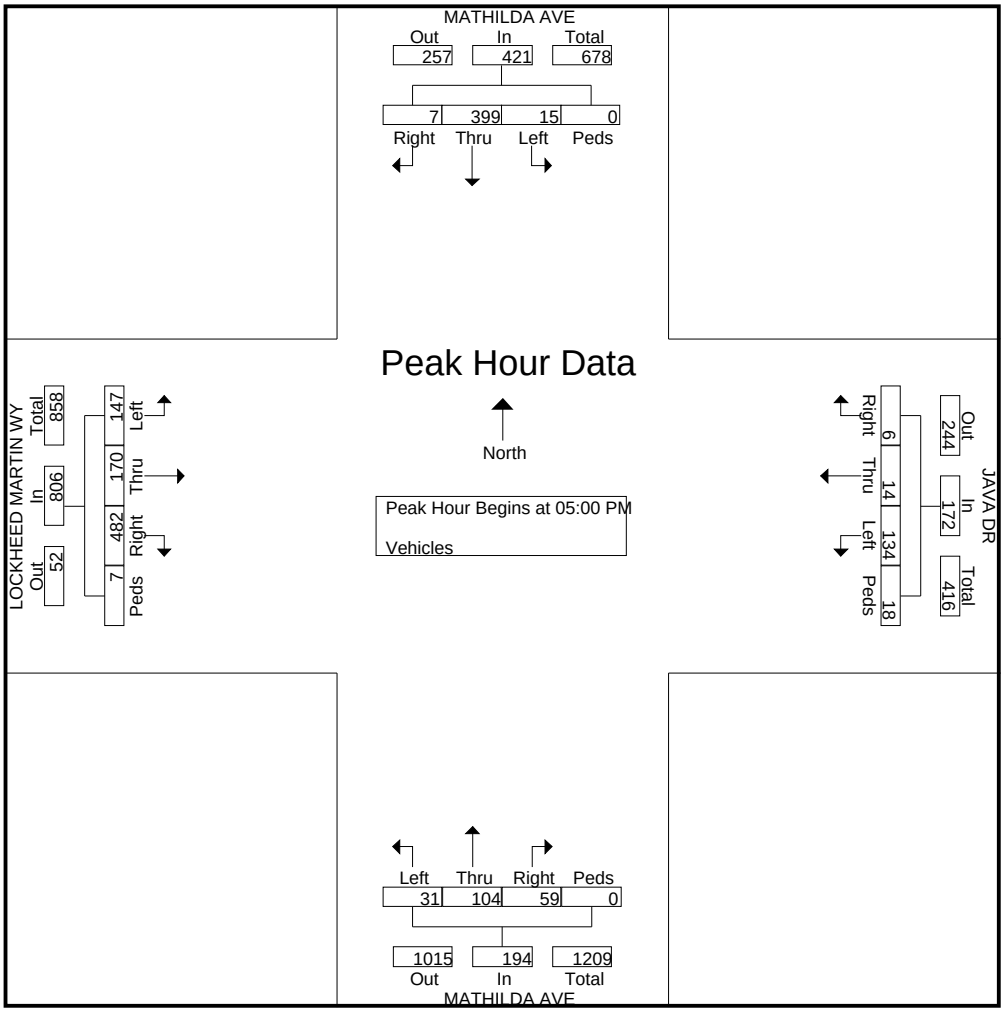

Traffic Data Service

Campbell, CA
(408) 377-2988
tdsbay@cs.com

File Name : 3PM FINAL
Site Code : 00000003
Start Date : 2/12/2013
Page No : 1

Groups Printed- Bikes

	MATHILDA AVE Southbound					JAVA DR Westbound					MATHILDA AVE Northbound					LOCKHEED MARTIN WY Eastbound					
Start Time	Right	Thru	Left	Peds	App. Total	Right	Thru	Left	Peds	App. Total	Right	Thru	Left	Peds	App. Total	Right	Thru	Left	Peds	App. Total	Int. Total
04:30 PM	0	0	0	0	0	0	0	0	0	0	0	0	0	0	0	0	0	0	0	0	0
04:45 PM	0	1	0	0	1	0	0	0	0	0	0	0	0	0	0	0	0	0	0	0	1
Total	0	1	0	0	1	0	0	0	0	0	0	0	0	0	0	0	0	0	0	0	1
05:00 PM	0	0	0	0	0	0	0	0	0	0	0	0	0	0	0	0	0	0	0	0	0
05:15 PM	0	0	0	0	0	0	0	0	0	0	0	0	0	0	0	0	0	0	0	0	0
05:30 PM	0	0	0	0	0	0	0	0	0	0	0	0	0	0	0	0	0	0	0	0	0
05:45 PM	0	0	0	0	0	0	0	0	0	0	0	0	0	0	0	0	0	0	0	0	0
Total	0	0	0	0	0	0	0	0	0	0	0	0	0	0	0	0	0	0	0	0	0
06:00 PM	0	0	0	0	0	0	0	0	0	0	0	0	0	0	0	0	0	0	0	0	0
06:15 PM	0	0	0	0	0	0	0	0	0	0	0	1	0	0	1	0	0	0	0	0	1
Grand Total	0	1	0	0	1	0	0	0	0	0	0	1	0	0	1	0	0	0	0	0	2
Apprch %	0	100	0	0		0	0	0	0		0	100	0	0		0	0	0	0		
Total %	0	50	0	0	50	0	0	0	0	0	0	50	0	0	50	0	0	0	0	0	

	MATHILDA AVE Southbound					JAVA DR Westbound					MATHILDA AVE Northbound					LOCKHEED MARTIN WY Eastbound					
Start Time	Right	Thru	Left	Peds	App. Total	Right	Thru	Left	Peds	App. Total	Right	Thru	Left	Peds	App. Total	Right	Thru	Left	Peds	App. Total	Int. Total
Peak Hour Analysis From 04:30 PM to 05:45 PM - Peak 1 of 1																					
Peak Hour for Entire Intersection Begins at 04:30 PM																					
04:30 PM	0	0	0	0	0	0	0	0	0	0	0	0	0	0	0	0	0	0	0	0	0
04:45 PM	0	**1**	0	0	**1**	0	0	0	0	0	0	0	0	0	0	0	0	0	0	0	**1**
05:00 PM	0	0	0	0	0	0	0	0	0	0	0	0	0	0	0	0	0	0	0	0	0
05:15 PM	0	0	0	0	0	0	0	0	0	0	0	0	0	0	0	0	0	0	0	0	0
Total Volume	0	1	0	0	1	0	0	0	0	0	0	0	0	0	0	0	0	0	0	0	1
% App. Total	0	100	0	0		0	0	0	0		0	0	0	0		0	0	0	0		
PHF	.000	.250	.000	.000	.250	.000	.000	.000	.000	.000	.000	.000	.000	.000	.000	.000	.000	.000	.000	.000	.250

Traffic Data Service

Campbell, CA
(408) 377-2988
tdsbay@cs.com

File Name : 3PM FINAL
Site Code : 00000003
Start Date : 2/12/2013
Page No : 2

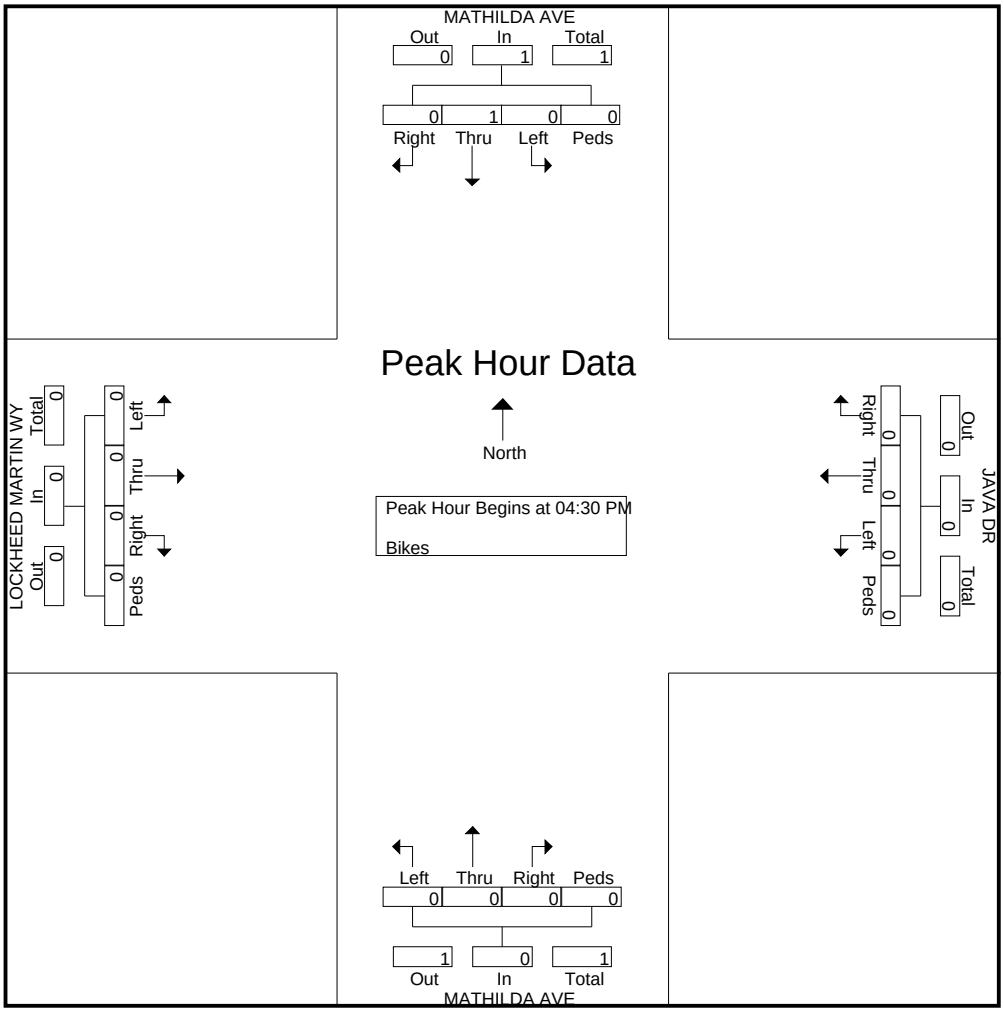

Traffic Data Service

Campbell, CA
(408) 377-2988
tdsbay@cs.com

File Name : 4AM FINAL
Site Code : 00000004
Start Date : 2/12/2013
Page No : 1

Groups Printed- Vehicles

	MATHILDA AVE Southbound					Westbound					MATHILDA AVE Northbound					INNOVATION WAY Eastbound					
Start Time	Right	Thru	Left	Peds	App. Total	Right	Thru	Left	Peds	App. Total	Right	Thru	Left	Peds	App. Total	Right	Thru	Left	Peds	App. Total	Int. Total
07:00 AM	4	14	0	1	19	0	0	0	0	0	0	194	32	0	226	1	0	0	0	1	246
07:15 AM	7	28	0	0	35	0	0	0	0	0	0	207	40	0	247	6	0	0	0	6	288
07:30 AM	9	33	0	0	42	0	0	0	0	0	0	199	52	0	251	0	0	0	0	0	293
07:45 AM	5	48	0	0	53	0	0	0	0	0	0	274	74	0	348	2	0	5	0	7	408
Total	25	123	0	1	149	0	0	0	0	0	0	874	198	0	1072	9	0	5	0	14	1235
08:00 AM	8	60	0	0	68	0	0	0	0	0	0	260	75	0	335	7	0	8	0	15	418
08:15 AM	14	52	0	1	67	0	0	0	0	0	0	237	94	0	331	9	0	1	1	11	409
08:30 AM	8	56	0	2	66	0	0	0	0	0	0	268	79	0	347	1	0	4	0	5	418
08:45 AM	15	65	0	1	81	0	0	0	0	0	0	324	115	0	439	4	0	5	0	9	529
Total	45	233	0	4	282	0	0	0	0	0	0	1089	363	0	1452	21	0	18	1	40	1774
Grand Total	70	356	0	5	431	0	0	0	0	0	0	1963	561	0	2524	30	0	23	1	54	3009
Apprch %	16.2	82.6	0	1.2		0	0	0	0		0	77.8	22.2	0		55.6	0	42.6	1.9		
Total %	2.3	11.8	0	0.2	14.3	0	0	0	0	0	0	65.2	18.6	0	83.9	1	0	0.8	0	1.8	

	MATHILDA AVE Southbound					Westbound					MATHILDA AVE Northbound					INNOVATION WAY Eastbound					
Start Time	Right	Thru	Left	Peds	App. Total	Right	Thru	Left	Peds	App. Total	Right	Thru	Left	Peds	App. Total	Right	Thru	Left	Peds	App. Total	Int. Total
Peak Hour Analysis From 07:00 AM to 08:45 AM - Peak 1 of 1																					
Peak Hour for Entire Intersection Begins at 08:00 AM																					
08:00 AM	8	60	0	0	68	0	0	0	0	0	0	260	75	0	335	7	0	**8**	0	**15**	418
08:15 AM	14	52	0	1	67	0	0	0	0	0	0	237	94	0	331	**9**	0	1	**1**	11	409
08:30 AM	8	56	0	**2**	66	0	0	0	0	0	0	268	79	0	347	1	0	4	0	5	418
08:45 AM	**15**	**65**	0	1	**81**	0	0	0	0	0	0	**324**	**115**	0	**439**	4	0	5	0	9	**529**
Total Volume	45	233	0	4	282	0	0	0	0	0	0	1089	363	0	1452	21	0	18	1	40	1774
% App. Total																					
PHF	.750	.896	.000	.500	.870	.000	.000	.000	.000	.000	.000	.840	.789	.000	.827	.583	.000	.563	.250	.667	.838

Traffic Data Service

Campbell, CA

(408) 377-2988

tdsbay@cs.com

File Name : 4AM FINAL
Site Code : 00000004
Start Date : 2/12/2013
Page No : 2

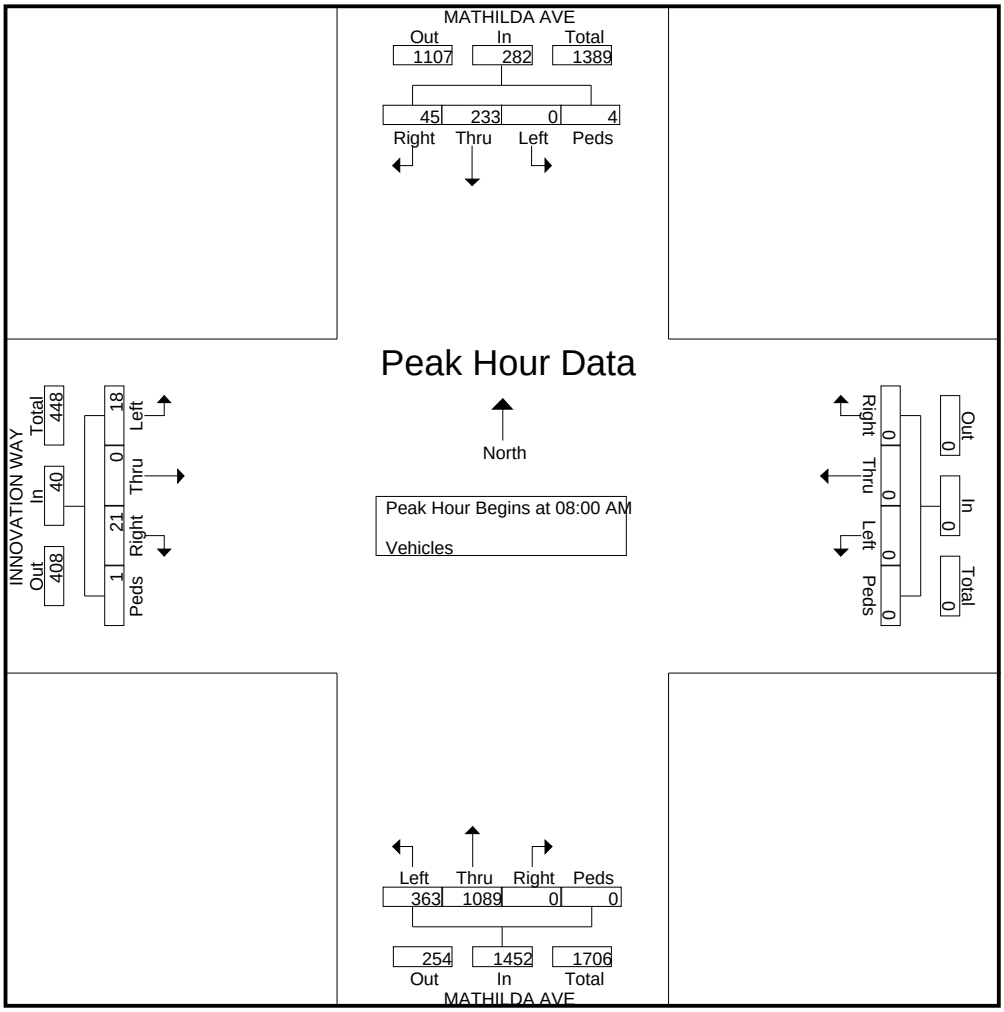

Traffic Data Service

Campbell, CA
(408) 377-2988
tdsbay@cs.com

File Name : 4AM FINAL
Site Code : 00000004
Start Date : 2/12/2013
Page No : 1

Groups Printed- Bikes

	MATHILDA AVE Southbound					Westbound					MATHILDA AVE Northbound					INNOVATION WAY Eastbound					
Start Time	Right	Thru	Left	Peds	App. Total	Right	Thru	Left	Peds	App. Total	Right	Thru	Left	Peds	App. Total	Right	Thru	Left	Peds	App. Total	Int. Total
07:00 AM	0	0	0	0	0	0	0	0	0	0	0	4	0	0	4	0	0	1	0	1	5
07:15 AM	0	0	0	0	0	0	0	0	0	0	0	9	0	0	9	0	0	1	0	1	10
07:30 AM	0	1	0	0	1	0	0	0	0	0	0	0	0	0	0	0	0	0	0	0	1
07:45 AM	0	0	0	0	0	0	0	0	0	0	0	1	0	0	1	0	0	0	0	0	1
Total	0	1	0	0	1	0	0	0	0	0	0	14	0	0	14	0	0	2	0	2	17
08:00 AM	1	0	0	0	1	0	0	0	0	0	0	0	0	0	0	0	0	0	0	0	1
08:15 AM	0	0	0	0	0	0	0	0	0	0	0	1	0	0	1	0	0	0	0	0	1
08:30 AM	0	0	0	0	0	0	0	0	0	0	0	0	0	0	0	0	0	0	0	0	0
08:45 AM	0	0	0	0	0	0	0	0	0	0	0	0	0	0	0	0	0	0	0	0	0
Total	1	0	0	0	1	0	0	0	0	0	0	1	0	0	1	0	0	0	0	0	2
Grand Total	1	1	0	0	2	0	0	0	0	0	0	15	0	0	15	0	0	2	0	2	19
Apprch %	50	50	0	0		0	0	0	0		0	100	0	0		0	0	100	0		
Total %	5.3	5.3	0	0	10.5	0	0	0	0	0	0	78.9	0	0	78.9	0	0	10.5	0	10.5	

	MATHILDA AVE Southbound					Westbound					MATHILDA AVE Northbound					INNOVATION WAY Eastbound					
Start Time	Right	Thru	Left	Peds	App. Total	Right	Thru	Left	Peds	App. Total	Right	Thru	Left	Peds	App. Total	Right	Thru	Left	Peds	App. Total	Int. Total
Peak Hour Analysis From 07:00 AM to 08:45 AM - Peak 1 of 1																					
Peak Hour for Entire Intersection Begins at 07:00 AM																					
07:00 AM	0	0	0	0	0	0	0	0	0	0	0	4	0	0	4	0	0	**1**	0	**1**	5
07:15 AM	0	0	0	0	0	0	0	0	0	0	0	**9**	0	0	**9**	0	0	1	0	1	**10**
07:30 AM	0	**1**	0	0	**1**	0	0	0	0	0	0	0	0	0	0	0	0	0	0	0	1
07:45 AM	0	0	0	0	0	0	0	0	0	0	0	1	0	0	1	0	0	0	0	0	1
Total Volume	0	1	0	0	1	0	0	0	0	0	0	14	0	0	14	0	0	2	0	2	17
% App. Total	0	100	0	0		0	0	0	0		0	100	0	0		0	0	100	0		
PHF	.000	.250	.000	.000	.250	.000	.000	.000	.000	.000	.000	.389	.000	.000	.389	.000	.000	.500	.000	.500	.425

Traffic Data Service

Campbell, CA

(408) 377-2988

tdsbay@cs.com

File Name : 4AM FINAL
Site Code : 00000004
Start Date : 2/12/2013
Page No : 2

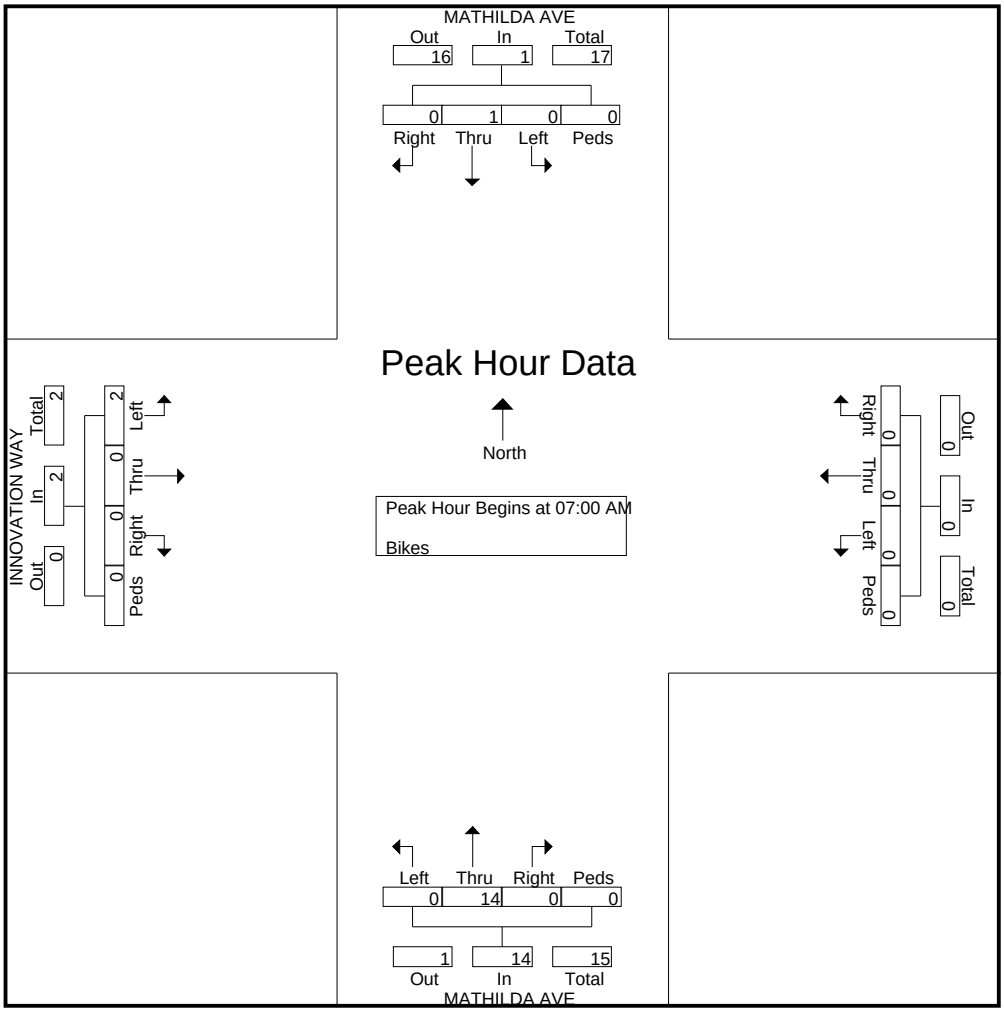

Traffic Data Service

Campbell, CA
(408) 377-2988
tdsbay@cs.com

File Name : 4PM FINAL
Site Code : 00000004
Start Date : 2/12/2013
Page No : 1

Groups Printed- Vehicles

	MATHILDA AVE Southbound					Westbound					MATHILDA AVE Northbound					INNOVATION WAY Eastbound					
Start Time	Right	Thru	Left	Peds	App. Total	Right	Thru	Left	Peds	App. Total	Right	Thru	Left	Peds	App. Total	Right	Thru	Left	Peds	App. Total	Int. Total
04:30 PM	4	287	0	2	293	0	0	0	0	0	0	43	7	0	50	50	0	6	1	57	400
04:45 PM	7	319	0	0	326	0	0	0	0	0	0	44	9	0	53	88	0	14	0	102	481
Total	11	606	0	2	619	0	0	0	0	0	0	87	16	0	103	138	0	20	1	159	881
05:00 PM	7	356	0	3	366	0	0	0	0	0	0	55	6	0	61	95	0	8	1	104	531
05:15 PM	14	356	3	3	376	0	0	0	0	0	0	59	12	0	71	101	0	16	0	117	564
05:30 PM	13	339	0	0	352	0	0	0	0	0	0	61	5	0	66	88	0	11	0	99	517
05:45 PM	6	295	0	2	303	0	0	0	0	0	0	47	6	1	54	73	0	15	1	89	446
Total	40	1346	3	8	1397	0	0	0	0	0	0	222	29	1	252	357	0	50	2	409	2058
06:00 PM	6	335	0	0	341	0	0	0	0	0	0	39	4	0	43	57	0	8	1	66	450
06:15 PM	11	285	0	3	299	0	0	0	0	0	0	32	6	0	38	79	0	10	0	89	426
Grand Total	68	2572	3	13	2656	0	0	0	0	0	0	380	55	1	436	631	0	88	4	723	3815
Apprch %	2.6	96.8	0.1	0.5		0	0	0	0		0	87.2	12.6	0.2		87.3	0	12.2	0.6		
Total %	1.8	67.4	0.1	0.3	69.6	0	0	0	0	0	0	10	1.4	0	11.4	16.5	0	2.3	0.1	19	

	MATHILDA AVE Southbound					Westbound					MATHILDA AVE Northbound					INNOVATION WAY Eastbound					
Start Time	Right	Thru	Left	Peds	App. Total	Right	Thru	Left	Peds	App. Total	Right	Thru	Left	Peds	App. Total	Right	Thru	Left	Peds	App. Total	Int. Total
Peak Hour Analysis From 04:30 PM to 06:15 PM - Peak 1 of 1																					
Peak Hour for Entire Intersection Begins at 04:45 PM																					
04:45 PM	7	319	0	0	326	0	0	0	0	0	0	44	9	0	53	88	0	14	0	102	481
05:00 PM	7	**356**	0	**3**	366	0	0	0	0	0	0	55	6	0	61	95	0	8	**1**	104	531
05:15 PM	**14**	356	**3**	3	**376**	0	0	0	0	0	0	59	**12**	0	**71**	**101**	0	**16**	0	**117**	**564**
05:30 PM	13	339	0	0	352	0	0	0	0	0	0	**61**	5	0	66	88	0	11	0	99	517
Total Volume	41	1370	3	6	1420	0	0	0	0	0	0	219	32	0	251	372	0	49	1	422	2093
% App. Total																					
PHF	.732	.962	.250	.500	.944	.000	.000	.000	.000	.000	.000	.898	.667	.000	.884	.921	.000	.766	.250	.902	.928

Traffic Data Service

Campbell, CA

(408) 377-2988

tdsbay@cs.com

File Name : 4PM FINAL
Site Code : 00000004
Start Date : 2/12/2013
Page No : 2

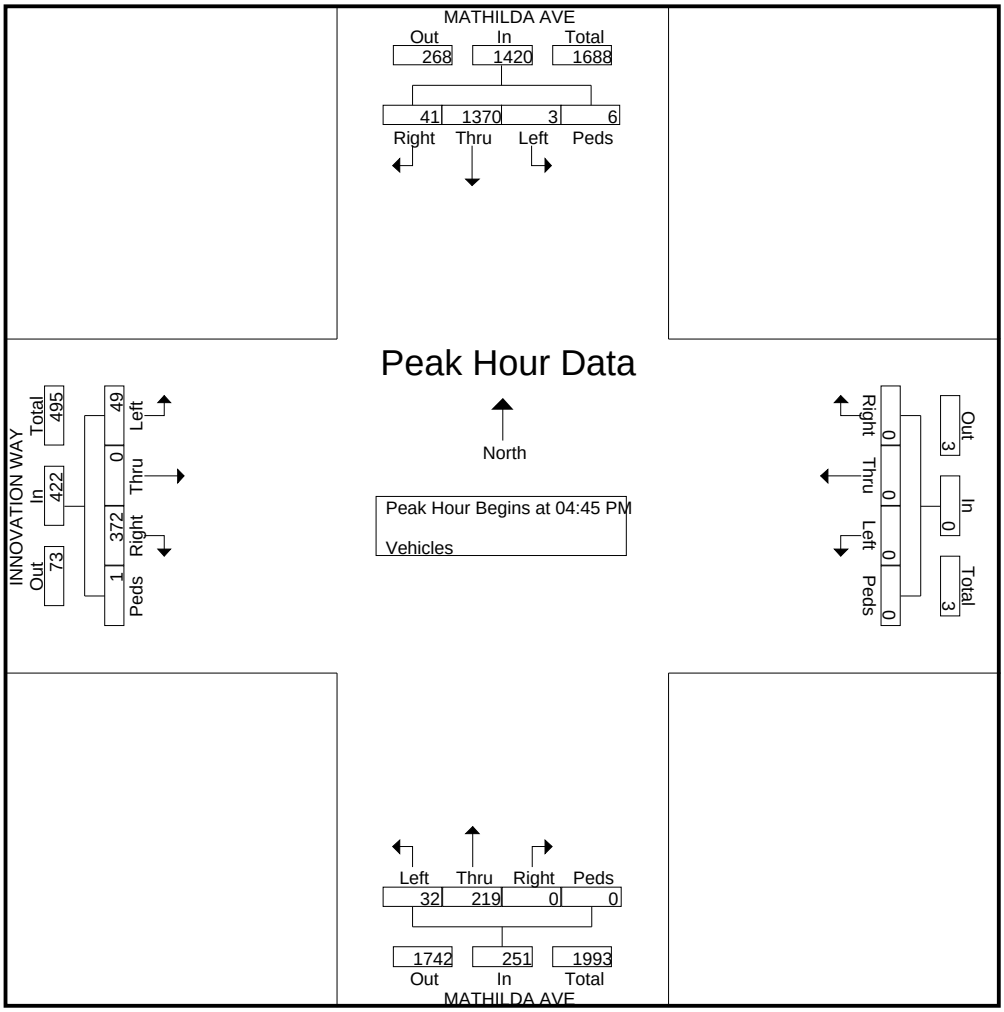

Traffic Data Service

Campbell, CA
(408) 377-2988
tdsbay@cs.com

File Name : 4PM FINAL
Site Code : 00000004
Start Date : 2/12/2013
Page No : 1

Groups Printed- Bikes

	MATHILDA AVE Southbound					Westbound					MATHILDA AVE Northbound					INNOVATION WAY Eastbound					
Start Time	Right	Thru	Left	Peds	App. Total	Right	Thru	Left	Peds	App. Total	Right	Thru	Left	Peds	App. Total	Right	Thru	Left	Peds	App. Total	Int. Total
04:30 PM	0	0	0	0	0	0	0	0	0	0	0	0	0	0	0	0	0	0	0	0	0
04:45 PM	0	0	0	0	0	0	0	0	0	0	0	0	0	0	0	0	0	0	0	0	0
Total	0	0	0	0	0	0	0	0	0	0	0	0	0	0	0	0	0	0	0	0	0
05:00 PM	0	0	0	0	0	0	0	0	0	0	0	0	0	0	0	0	0	0	0	0	0
05:15 PM	0	0	0	0	0	0	0	0	0	0	0	0	0	0	0	0	0	0	0	0	0
05:30 PM	0	0	0	0	0	0	0	0	0	0	0	1	0	0	1	0	0	1	0	1	2
05:45 PM	0	2	0	0	2	0	0	0	0	0	0	2	0	0	2	0	0	0	0	0	4
Total	0	2	0	0	2	0	0	0	0	0	0	3	0	0	3	0	0	1	0	1	6
06:00 PM	0	1	0	0	1	0	0	0	0	0	0	0	0	0	0	0	0	0	0	0	1
06:15 PM	0	0	0	0	0	0	0	0	0	0	0	0	0	0	0	0	0	0	0	0	0
Grand Total	0	3	0	0	3	0	0	0	0	0	0	3	0	0	3	0	0	1	0	1	7
Apprch %	0	100	0	0		0	0	0	0		0	100	0	0		0	0	100	0		
Total %	0	42.9	0	0	42.9	0	0	0	0	0	0	42.9	0	0	42.9	0	0	14.3	0	14.3	

	MATHILDA AVE Southbound					Westbound					MATHILDA AVE Northbound					INNOVATION WAY Eastbound					
Start Time	Right	Thru	Left	Peds	App. Total	Right	Thru	Left	Peds	App. Total	Right	Thru	Left	Peds	App. Total	Right	Thru	Left	Peds	App. Total	Int. Total
Peak Hour Analysis From 04:30 PM to 06:15 PM - Peak 1 of 1																					
Peak Hour for Entire Intersection Begins at 05:15 PM																					
05:15 PM	0	0	0	0	0	0	0	0	0	0	0	0	0	0	0	0	0	0	0	0	0
05:30 PM	0	0	0	0	0	0	0	0	0	0	0	1	0	0	1	0	0	**1**	0	**1**	2
05:45 PM	0	**2**	0	0	**2**	0	0	0	0	0	0	**2**	0	0	**2**	0	0	0	0	0	**4**
06:00 PM	0	1	0	0	1	0	0	0	0	0	0	0	0	0	0	0	0	0	0	0	1
Total Volume	0	3	0	0	3	0	0	0	0	0	0	3	0	0	3	0	0	1	0	1	7
% App. Total	0	100	0	0		0	0	0	0		0	100	0	0		0	0	100	0		
PHF	.000	.375	.000	.000	.375	.000	.000	.000	.000	.000	.000	.375	.000	.000	.375	.000	.000	.250	.000	.250	.438

Traffic Data Service

Campbell, CA

(408) 377-2988

tdsbay@cs.com

File Name : 4PM FINAL
Site Code : 00000004
Start Date : 2/12/2013
Page No : 2

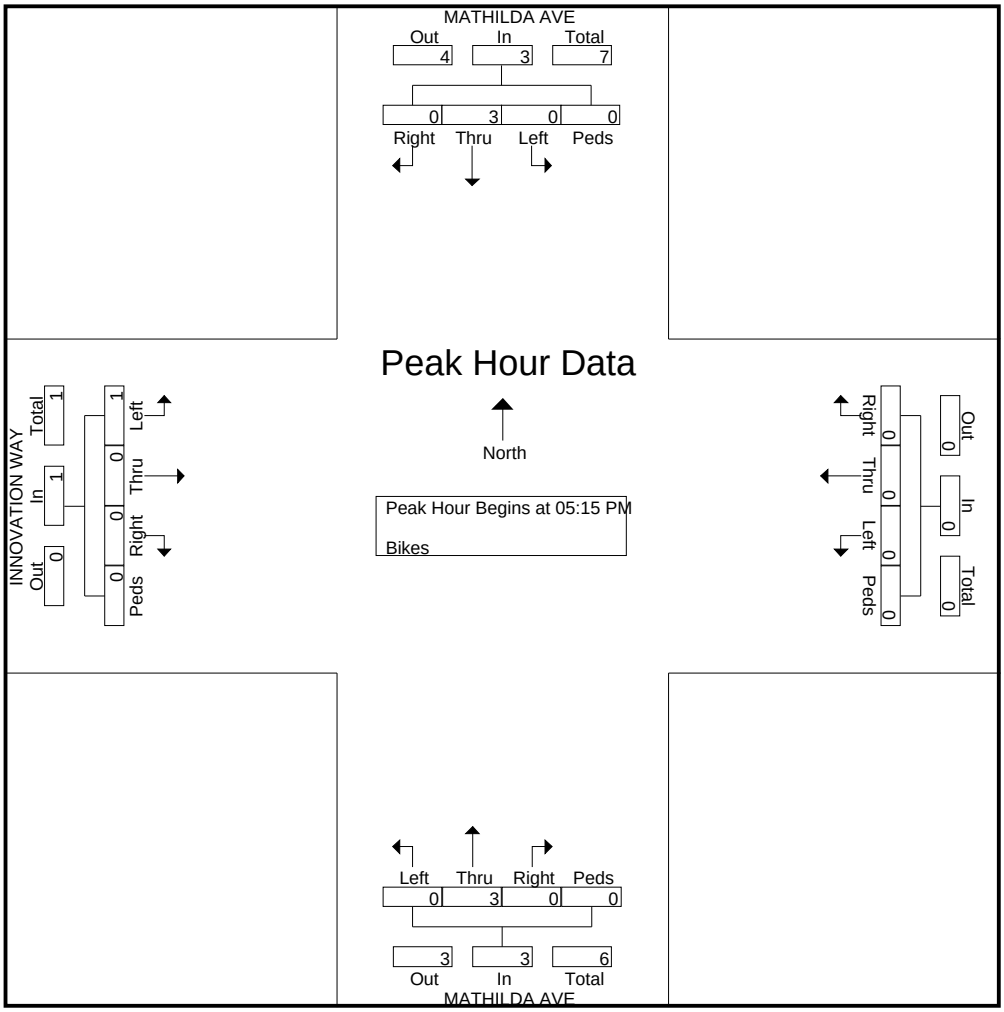

Traffic Data Service

Campbell, CA
(408) 377-2988
tdsbay@cs.com

File Name : 5AM FINAL
Site Code : 00000005
Start Date : 2/12/2013
Page No : 1

Groups Printed- Vehicles

	MATHILDA AVE Southbound					MOFFETT PARK DR Westbound					MATHILDA AVE Northbound					MOFFETT PARK DR Eastbound					
Start Time	Right	Thru	Left	Peds	App. Total	Right	Thru	Left	Peds	App. Total	Right	Thru	Left	Peds	App. Total	Right	Thru	Left	Peds	App. Total	Int. Total
07:00 AM	3	13	0	0	16	1	7	13	1	22	96	225	84	0	405	11	1	2	0	14	457
07:15 AM	4	28	0	0	32	3	15	10	1	29	113	246	67	0	426	3	6	3	0	12	499
07:30 AM	18	26	0	0	44	3	41	16	0	60	142	272	101	0	515	10	2	0	0	12	631
07:45 AM	23	35	2	0	60	4	40	18	1	63	165	315	123	6	609	14	7	3	0	24	756
Total	48	102	2	0	152	11	103	57	3	174	516	1058	375	6	1955	38	16	8	0	62	2343
08:00 AM	18	49	4	1	72	5	38	14	1	58	188	307	125	0	620	13	10	4	0	27	777
08:15 AM	20	46	3	0	69	4	39	15	1	59	182	334	131	0	647	4	11	4	0	19	794
08:30 AM	26	44	1	0	71	5	36	17	1	59	171	325	109	0	605	15	14	6	0	35	770
08:45 AM	18	57	0	0	75	7	47	26	1	81	182	396	146	0	724	6	12	7	0	25	905
Total	82	196	8	1	287	21	160	72	4	257	723	1362	511	0	2596	38	47	21	0	106	3246
Grand Total	130	298	10	1	439	32	263	129	7	431	1239	2420	886	6	4551	76	63	29	0	168	5589
Apprch %	29.6	67.9	2.3	0.2		7.4	61	29.9	1.6		27.2	53.2	19.5	0.1		45.2	37.5	17.3	0		
Total %	2.3	5.3	0.2	0	7.9	0.6	4.7	2.3	0.1	7.7	22.2	43.3	15.9	0.1	81.4	1.4	1.1	0.5	0	3	

	MATHILDA AVE Southbound					MOFFETT PARK DR Westbound					MATHILDA AVE Northbound					MOFFETT PARK DR Eastbound					
Start Time	Right	Thru	Left	Peds	App. Total	Right	Thru	Left	Peds	App. Total	Right	Thru	Left	Peds	App. Total	Right	Thru	Left	Peds	App. Total	Int. Total
Peak Hour Analysis From 07:00 AM to 08:45 AM - Peak 1 of 1																					
Peak Hour for Entire Intersection Begins at 08:00 AM																					
08:00 AM	18	49	**4**	**1**	72	5	38	14	**1**	58	**188**	307	125	0	620	13	10	4	0	27	777
08:15 AM	20	46	3	0	69	4	39	15	1	59	182	334	131	0	647	4	11	4	0	19	794
08:30 AM	**26**	44	1	0	71	5	36	17	1	59	171	325	109	0	605	**15**	**14**	6	0	**35**	770
08:45 AM	18	**57**	0	0	**75**	**7**	**47**	**26**	1	**81**	182	**396**	**146**	0	**724**	6	12	**7**	0	25	**905**
Total Volume	82	196	8	1	287	21	160	72	4	257	723	1362	511	0	2596	38	47	21	0	106	3246
% App. Total																					
PHF	.788	.860	.500	.250	.957	.750	.851	.692	1.00	.793	.961	.860	.875	.000	.896	.633	.839	.750	.000	.757	.897

Traffic Data Service

Campbell, CA

(408) 377-2988

tdsbay@cs.com

File Name : 5AM FINAL
Site Code : 00000005
Start Date : 2/12/2013
Page No : 2

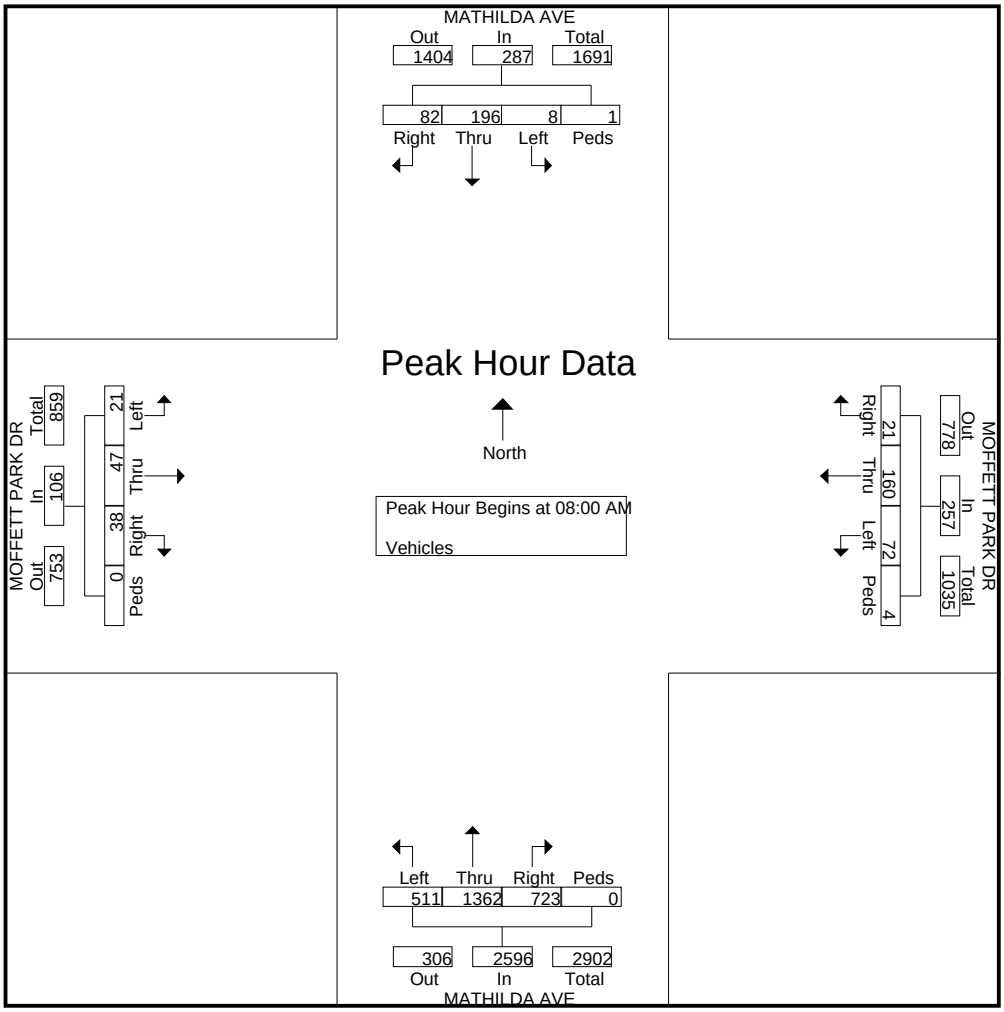

Traffic Data Service

Campbell, CA
(408) 377-2988
tdsbay@cs.com

File Name : 5AM FINAL
Site Code : 00000005
Start Date : 2/12/2013
Page No : 1

Groups Printed- Bikes

	MATHILDA AVE Southbound					MOFFETT PARK DR Westbound					MATHILDA AVE Northbound					MOFFETT PARK DR Eastbound					
Start Time	Right	Thru	Left	Peds	App. Total	Right	Thru	Left	Peds	App. Total	Right	Thru	Left	Peds	App. Total	Right	Thru	Left	Peds	App. Total	Int. Total
07:00 AM	0	0	0	0	0	0	0	0	0	0	0	1	0	0	1	0	1	1	0	2	3
07:15 AM	0	1	0	0	1	0	0	0	0	0	1	0	0	0	1	0	1	0	0	1	3
07:30 AM	0	0	1	0	1	0	1	0	0	1	0	1	0	0	1	0	0	0	0	0	3
07:45 AM	0	0	0	0	0	1	4	0	0	5	0	1	0	0	1	0	2	0	0	2	8
Total	0	1	1	0	2	1	5	0	0	6	1	3	0	0	4	0	4	1	0	5	17
08:00 AM	0	0	0	0	0	0	0	0	0	0	0	0	0	0	0	0	3	0	0	3	3
08:15 AM	0	0	0	0	0	1	1	0	0	2	0	1	0	0	1	0	4	0	0	4	7
08:30 AM	0	0	0	0	0	0	2	0	0	2	0	0	0	0	0	0	5	0	0	5	7
08:45 AM	0	0	0	0	0	0	1	0	0	1	0	1	0	0	1	0	3	0	0	3	5
Total	0	0	0	0	0	1	4	0	0	5	0	2	0	0	2	0	15	0	0	15	22
Grand Total	0	1	1	0	2	2	9	0	0	11	1	5	0	0	6	0	19	1	0	20	39
Apprch %	0	50	50	0		18.2	81.8	0	0		16.7	83.3	0	0		0	95	5	0		
Total %	0	2.6	2.6	0	5.1	5.1	23.1	0	0	28.2	2.6	12.8	0	0	15.4	0	48.7	2.6	0	51.3	

	MATHILDA AVE Southbound					MOFFETT PARK DR Westbound					MATHILDA AVE Northbound					MOFFETT PARK DR Eastbound					
Start Time	Right	Thru	Left	Peds	App. Total	Right	Thru	Left	Peds	App. Total	Right	Thru	Left	Peds	App. Total	Right	Thru	Left	Peds	App. Total	Int. Total
Peak Hour Analysis From 07:00 AM to 08:45 AM - Peak 1 of 1																					
Peak Hour for Entire Intersection Begins at 07:45 AM																					
07:45 AM	0	0	0	0	0	**1**	**4**	0	0	**5**	0	**1**	0	0	**1**	0	2	0	0	2	**8**
08:00 AM	0	0	0	0	0	0	0	0	0	0	0	0	0	0	0	0	3	0	0	3	3
08:15 AM	0	0	0	0	0	1	1	0	0	2	0	1	0	0	1	0	4	0	0	4	7
08:30 AM	0	0	0	0	0	0	2	0	0	2	0	0	0	0	0	0	**5**	0	0	**5**	7
Total Volume	0	0	0	0	0	2	7	0	0	9	0	2	0	0	2	0	14	0	0	14	25
% App. Total	0	0	0	0		22.2	77.8	0	0		0	100	0	0		0	100	0	0		
PHF	.000	.000	.000	.000	.000	.500	.438	.000	.000	.450	.000	.500	.000	.000	.500	.000	.700	.000	.000	.700	.781

Traffic Data Service

Campbell, CA
(408) 377-2988
tdsbay@cs.com

File Name : 5AM FINAL
Site Code : 00000005
Start Date : 2/12/2013
Page No : 2

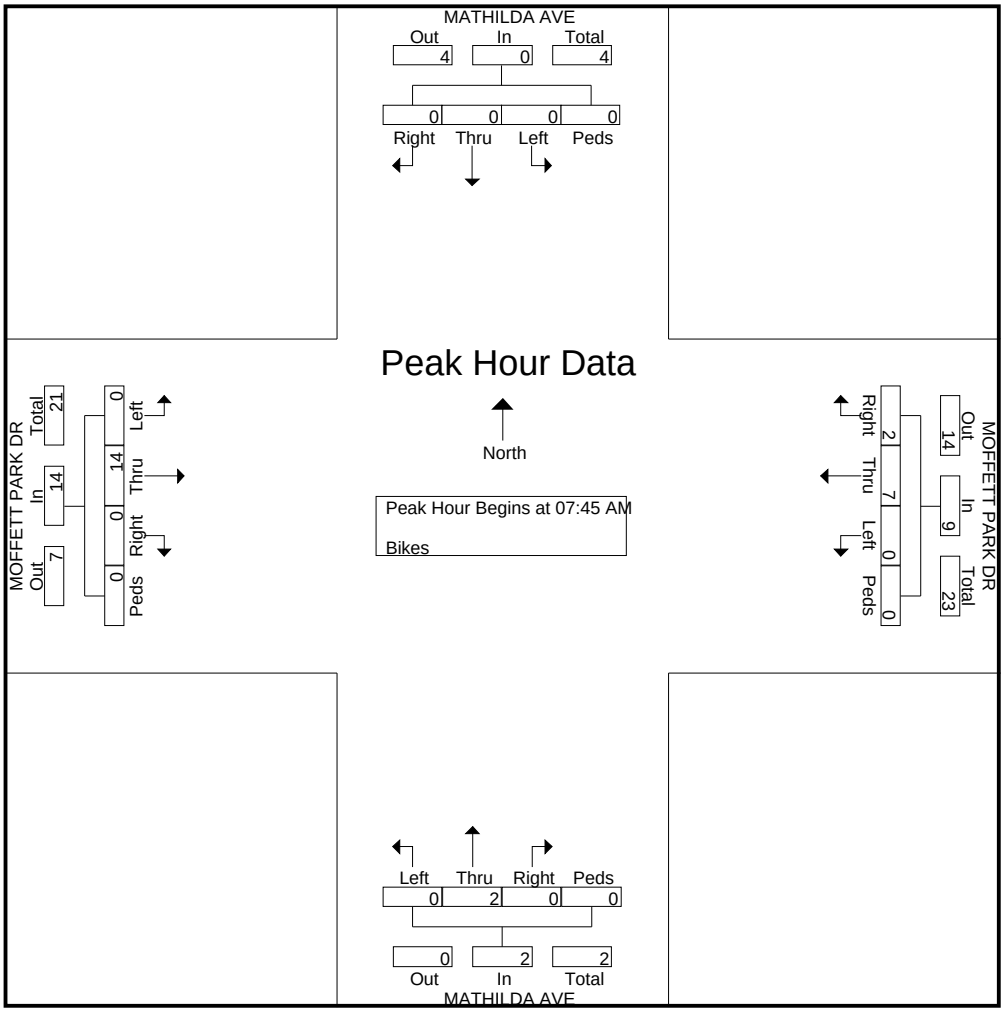

Traffic Data Service

Campbell, CA
(408) 377-2988
tdsbay@cs.com

File Name : 5PM FINAL
Site Code : 00000005
Start Date : 2/12/2013
Page No : 1

Groups Printed- Vehicles

	MATHILDA AVE Southbound					MOFFETT PARK DR Westbound					MATHILDA AVE Northbound					MOFFETT PARK DR Eastbound					
Start Time	Right	Thru	Left	Peds	App. Total	Right	Thru	Left	Peds	App. Total	Right	Thru	Left	Peds	App. Total	Right	Thru	Left	Peds	App. Total	Int. Total
04:30 PM	14	334	4	0	352	3	36	73	1	113	50	41	18	0	109	73	4	3	0	80	654
04:45 PM	12	357	2	0	371	3	38	86	1	128	27	46	13	0	86	56	12	7	0	75	660
Total	26	691	6	0	723	6	74	159	2	241	77	87	31	0	195	129	16	10	0	155	1314
05:00 PM	12	408	3	0	423	2	50	79	3	134	23	54	25	0	102	57	16	5	0	78	737
05:15 PM	17	403	17	1	438	6	70	61	3	140	31	66	20	0	117	55	12	6	0	73	768
05:30 PM	21	439	9	0	469	6	65	52	7	130	44	77	19	0	140	55	16	7	0	78	817
05:45 PM	21	387	5	1	414	6	52	93	4	155	31	60	20	0	111	68	12	5	0	85	765
Total	71	1637	34	2	1744	20	237	285	17	559	129	257	84	0	470	235	56	23	0	314	3087
06:00 PM	20	362	8	0	390	3	72	90	0	165	20	36	12	0	68	53	7	7	0	67	690
06:15 PM	20	341	9	0	370	3	49	100	1	153	28	52	7	0	87	49	8	2	0	59	669
Grand Total	137	3031	57	2	3227	32	432	634	20	1118	254	432	134	0	820	466	87	42	0	595	5760
Apprch %	4.2	93.9	1.8	0.1		2.9	38.6	56.7	1.8		31	52.7	16.3	0		78.3	14.6	7.1	0		
Total %	2.4	52.6	1	0	56	0.6	7.5	11	0.3	19.4	4.4	7.5	2.3	0	14.2	8.1	1.5	0.7	0	10.3	

	MATHILDA AVE Southbound					MOFFETT PARK DR Westbound					MATHILDA AVE Northbound					MOFFETT PARK DR Eastbound					
Start Time	Right	Thru	Left	Peds	App. Total	Right	Thru	Left	Peds	App. Total	Right	Thru	Left	Peds	App. Total	Right	Thru	Left	Peds	App. Total	Int. Total
Peak Hour Analysis From 04:30 PM to 06:15 PM - Peak 1 of 1																					
Peak Hour for Entire Intersection Begins at 05:00 PM																					
05:00 PM	12	408	3	0	423	2	50	79	3	134	23	54	**25**	0	102	57	**16**	5	0	78	737
05:15 PM	17	403	**17**	**1**	438	**6**	**70**	61	3	140	31	66	20	0	117	55	12	6	0	73	768
05:30 PM	**21**	**439**	9	0	**469**	6	65	52	**7**	130	**44**	**77**	19	0	**140**	55	16	**7**	0	78	**817**
05:45 PM	21	387	5	1	414	6	52	**93**	4	**155**	31	60	20	0	111	**68**	12	5	0	**85**	765
Total Volume	71	1637	34	2	1744	20	237	285	17	559	129	257	84	0	470	235	56	23	0	314	3087
% App. Total																					
PHF	.845	.932	.500	.500	.930	.833	.846	.766	.607	.902	.733	.834	.840	.000	.839	.864	.875	.821	.000	.924	.945

Traffic Data Service

Campbell, CA

(408) 377-2988

tdsbay@cs.com

File Name : 5PM FINAL
Site Code : 00000005
Start Date : 2/12/2013
Page No : 2

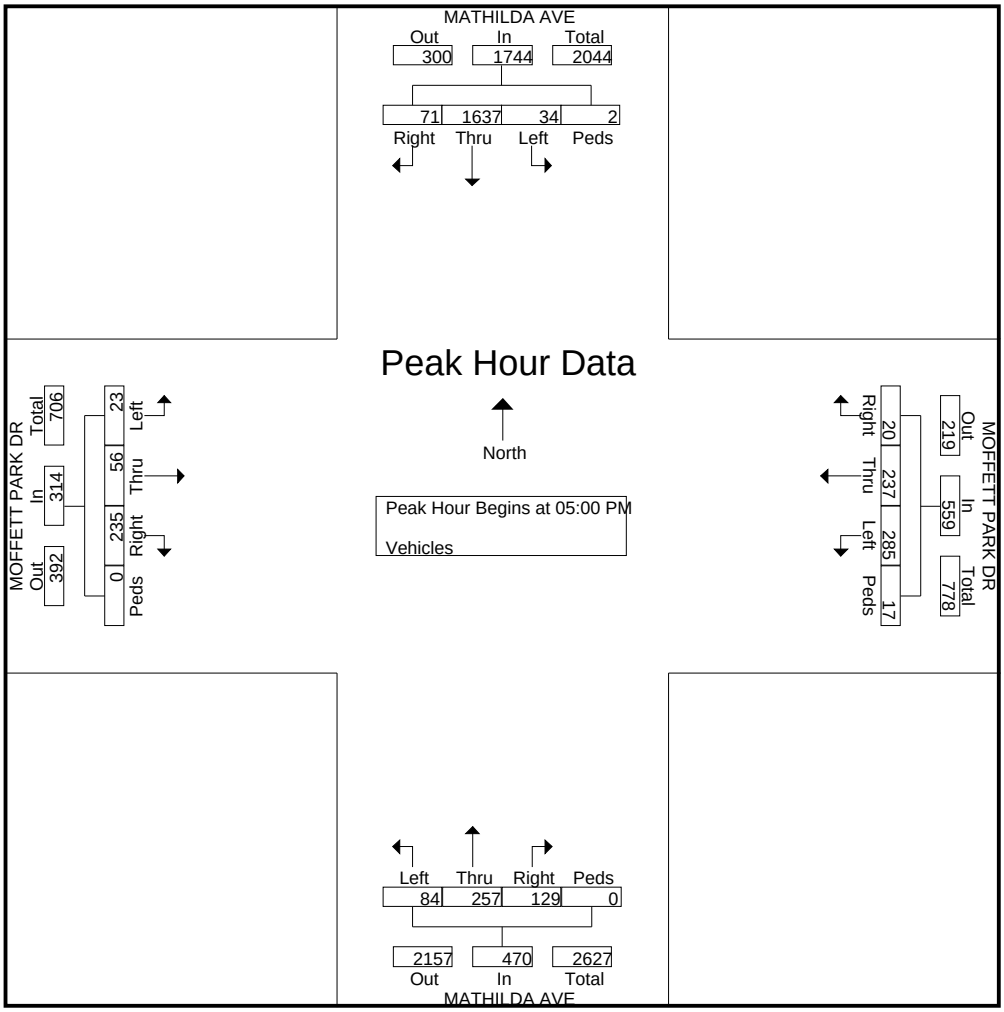

Traffic Data Service

Campbell, CA
(408) 377-2988
tdsbay@cs.com

File Name : 5PM FINAL
Site Code : 00000005
Start Date : 2/12/2013
Page No : 1

Groups Printed- Bikes

	MATHILDA AVE Southbound					MOFFETT PARK DR Westbound					MATHILDA AVE Northbound					MOFFETT PARK DR Eastbound					
Start Time	Right	Thru	Left	Peds	App. Total	Right	Thru	Left	Peds	App. Total	Right	Thru	Left	Peds	App. Total	Right	Thru	Left	Peds	App. Total	Int. Total
04:30 PM	0	0	0	0	0	0	0	0	0	0	0	0	0	0	0	0	0	0	0	0	0
04:45 PM	0	0	0	0	0	0	1	0	0	1	0	1	0	0	1	0	0	0	0	0	2
Total	0	0	0	0	0	0	1	0	0	1	0	1	0	0	1	0	0	0	0	0	2
05:00 PM	0	0	0	0	0	0	2	0	0	2	0	0	0	0	0	0	3	0	0	3	5
05:15 PM	0	0	0	0	0	0	5	0	0	5	0	0	0	0	0	0	3	0	0	3	8
05:30 PM	0	1	0	0	1	0	6	0	0	6	0	1	0	0	1	0	3	0	0	3	11
05:45 PM	0	1	0	0	1	1	3	0	0	4	0	0	0	0	0	0	5	1	0	6	11
Total	0	2	0	0	2	1	16	0	0	17	0	1	0	0	1	0	14	1	0	15	35
06:00 PM	0	0	0	0	0	0	5	1	0	6	0	0	0	0	0	0	2	0	0	2	8
06:15 PM	0	0	0	0	0	1	6	0	0	7	0	0	0	0	0	0	0	0	0	0	7
Grand Total	0	2	0	0	2	2	28	1	0	31	0	2	0	0	2	0	16	1	0	17	52
Apprch %	0	100	0	0		6.5	90.3	3.2	0		0	100	0	0		0	94.1	5.9	0		
Total %	0	3.8	0	0	3.8	3.8	53.8	1.9	0	59.6	0	3.8	0	0	3.8	0	30.8	1.9	0	32.7	

	MATHILDA AVE Southbound					MOFFETT PARK DR Westbound					MATHILDA AVE Northbound					MOFFETT PARK DR Eastbound					
Start Time	Right	Thru	Left	Peds	App. Total	Right	Thru	Left	Peds	App. Total	Right	Thru	Left	Peds	App. Total	Right	Thru	Left	Peds	App. Total	Int. Total
Peak Hour Analysis From 04:30 PM to 06:15 PM - Peak 1 of 1																					
Peak Hour for Entire Intersection Begins at 05:15 PM																					
05:15 PM	0	0	0	0	0	0	5	0	0	5	0	0	0	0	0	0	3	0	0	3	8
05:30 PM	0	**1**	0	0	**1**	0	**6**	0	0	**6**	0	**1**	0	0	**1**	0	3	0	0	3	**11**
05:45 PM	0	1	0	0	1	**1**	3	0	0	4	0	0	0	0	0	0	**5**	**1**	0	**6**	11
06:00 PM	0	0	0	0	0	0	5	**1**	0	6	0	0	0	0	0	0	2	0	0	2	8
Total Volume	0	2	0	0	2	1	19	1	0	21	0	1	0	0	1	0	13	1	0	14	38
% App. Total	0	100	0	0		4.8	90.5	4.8	0		0	100	0	0		0	92.9	7.1	0		
PHF	.000	.500	.000	.000	.500	.250	.792	.250	.000	.875	.000	.250	.000	.000	.250	.000	.650	.250	.000	.583	.864

Traffic Data Service

Campbell, CA
(408) 377-2988
tdsbay@cs.com

File Name : 5PM FINAL
Site Code : 00000005
Start Date : 2/12/2013
Page No : 2

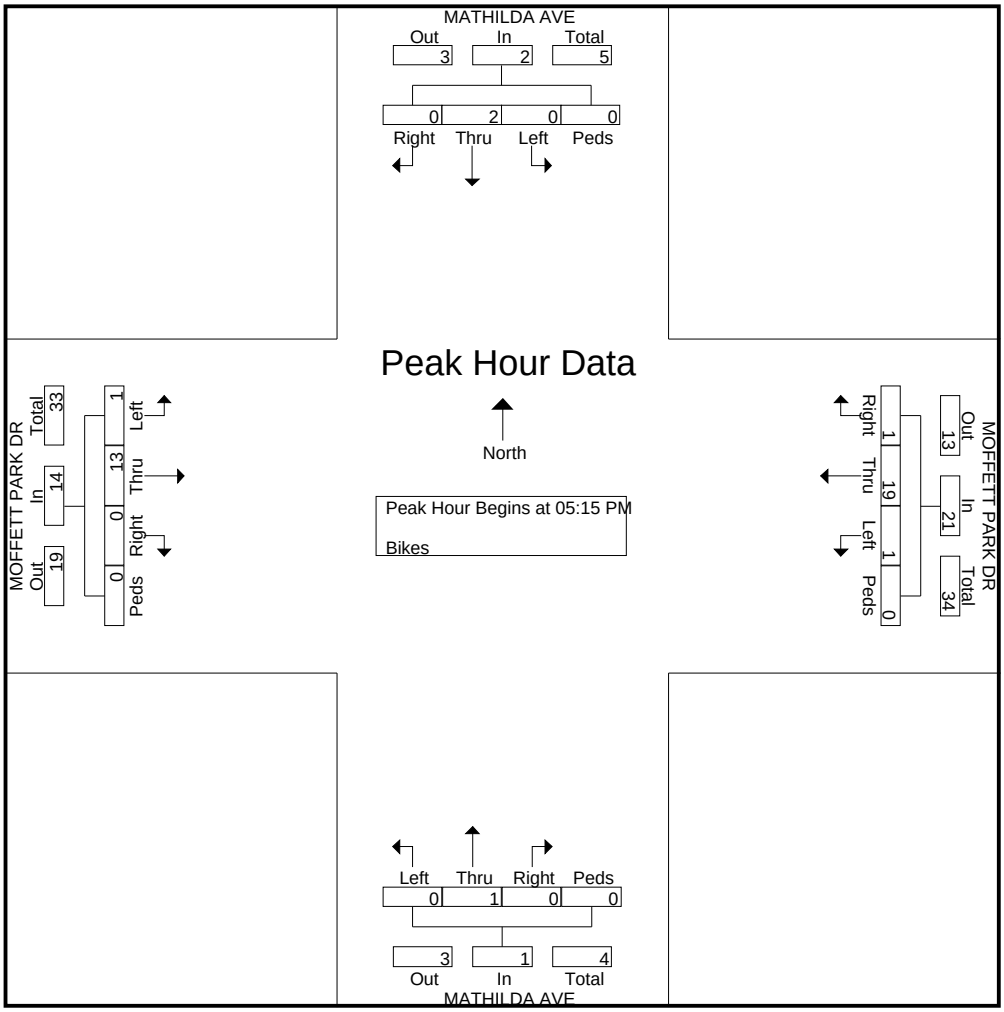

Traffic Data Service

Campbell, CA
(408) 377-2988
tdsbay@cs.com

File Name : 6AM FINAL
Site Code : 00000006
Start Date : 2/12/2013
Page No : 1

Groups Printed- Vehicles

	MATHILDA AVE Southbound					WB SR-237 RAMPS Westbound					MATHILDA AVE Northbound					WB SR-237 RAMPS Eastbound					
Start Time	Right	Thru	Left	Peds	App. Total	Right	Thru	Left	Peds	App. Total	Right	Thru	Left	Peds	App. Total	Right	Thru	Left	Peds	App. Total	Int. Total
07:00 AM	6	31	0	0	37	41	4	99	1	145	0	353	25	0	378	0	0	0	0	0	560
07:15 AM	13	36	0	0	49	47	5	106	1	159	0	375	18	0	393	0	0	0	0	0	601
07:30 AM	11	45	0	0	56	93	12	164	0	269	0	412	32	0	444	0	0	0	0	0	769
07:45 AM	21	49	0	0	70	72	6	173	2	253	0	541	29	0	570	0	0	0	0	0	893
Total	51	161	0	0	212	253	27	542	4	826	0	1681	104	0	1785	0	0	0	0	0	2823
08:00 AM	21	64	0	0	85	74	8	133	1	216	0	517	20	0	537	0	0	0	0	0	838
08:15 AM	16	52	0	0	68	54	8	148	0	210	0	581	19	0	600	0	0	0	0	0	878
08:30 AM	20	57	0	0	77	63	3	135	2	203	0	566	16	0	582	0	0	0	0	0	862
08:45 AM	26	62	0	0	88	47	0	161	0	208	0	665	5	0	670	0	0	0	0	0	966
Total	83	235	0	0	318	238	19	577	3	837	0	2329	60	0	2389	0	0	0	0	0	3544
Grand Total	134	396	0	0	530	491	46	1119	7	1663	0	4010	164	0	4174	0	0	0	0	0	6367
Apprch %	25.3	74.7	0	0		29.5	2.8	67.3	0.4		0	96.1	3.9	0		0	0	0	0		
Total %	2.1	6.2	0	0	8.3	7.7	0.7	17.6	0.1	26.1	0	63	2.6	0	65.6	0	0	0	0	0	

	MATHILDA AVE Southbound					WB SR-237 RAMPS Westbound					MATHILDA AVE Northbound					WB SR-237 RAMPS Eastbound					
Start Time	Right	Thru	Left	Peds	App. Total	Right	Thru	Left	Peds	App. Total	Right	Thru	Left	Peds	App. Total	Right	Thru	Left	Peds	App. Total	Int. Total
Peak Hour Analysis From 07:00 AM to 08:45 AM - Peak 1 of 1																					
Peak Hour for Entire Intersection Begins at 08:00 AM																					
08:00 AM	21	**64**	0	0	85	**74**	**8**	133	1	**216**	0	517	**20**	0	537	0	0	0	0	0	838
08:15 AM	16	52	0	0	68	54	8	148	0	210	0	581	19	0	600	0	0	0	0	0	878
08:30 AM	20	57	0	0	77	63	3	135	**2**	203	0	566	16	0	582	0	0	0	0	0	862
08:45 AM	**26**	62	0	0	**88**	47	0	**161**	0	208	0	**665**	5	0	**670**	0	0	0	0	0	**966**
Total Volume	83	235	0	0	318	238	19	577	3	837	0	2329	60	0	2389	0	0	0	0	0	3544
% App. Total																					
PHF	.798	.918	.000	.000	.903	.804	.594	.896	.375	.969	.000	.876	.750	.000	.891	.000	.000	.000	.000	.000	.917

Traffic Data Service

Campbell, CA
(408) 377-2988
tdsbay@cs.com

File Name : 6AM FINAL
Site Code : 00000006
Start Date : 2/12/2013
Page No : 2

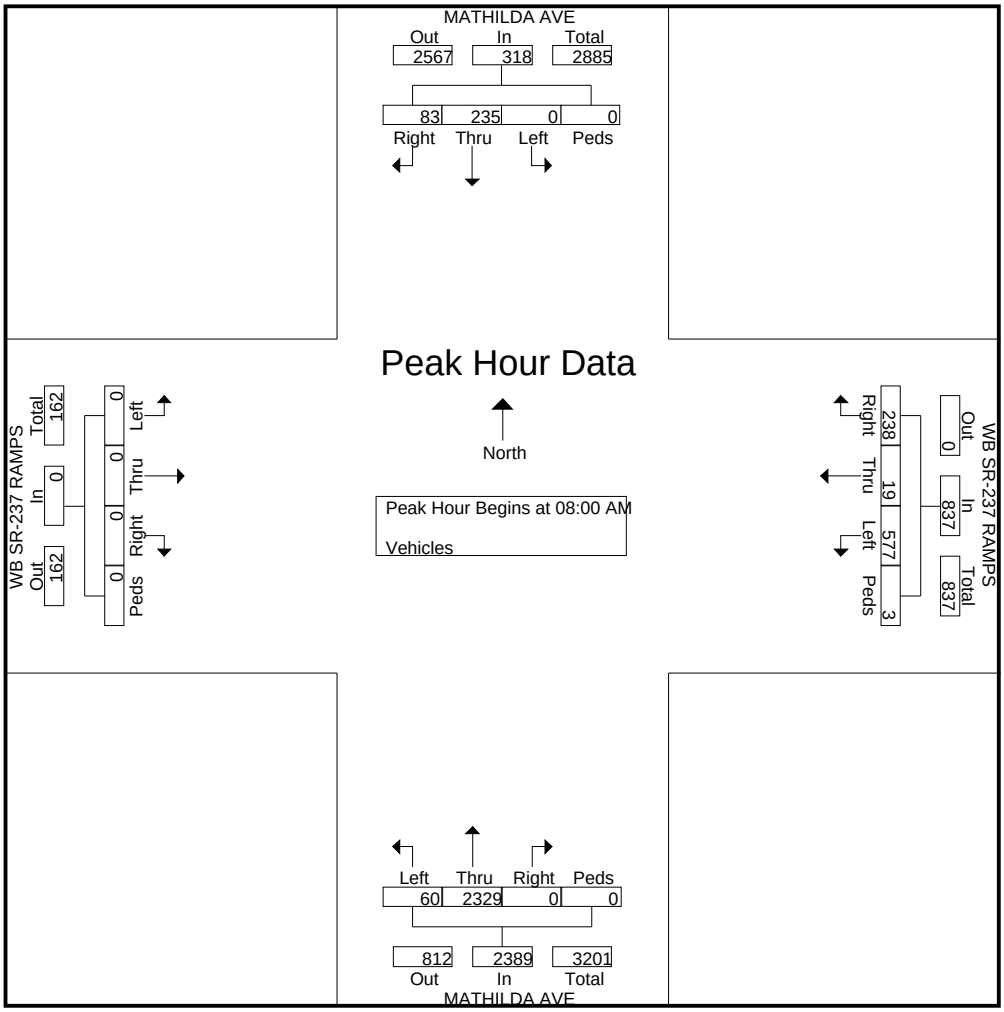

Traffic Data Service

Campbell, CA
(408) 377-2988
tdsbay@cs.com

File Name : 6AM FINAL
Site Code : 00000006
Start Date : 2/12/2013
Page No : 1

Groups Printed- Bikes

	MATHILDA AVE Southbound					WB SR-237 RAMPS Westbound					MATHILDA AVE Northbound					WB SR-237 RAMPS Eastbound					
Start Time	Right	Thru	Left	Peds	App. Total	Right	Thru	Left	Peds	App. Total	Right	Thru	Left	Peds	App. Total	Right	Thru	Left	Peds	App. Total	Int. Total
07:00 AM	0	0	0	0	0	0	0	0	0	0	0	1	0	0	1	0	0	0	0	0	1
07:15 AM	0	1	0	0	1	0	0	0	0	0	0	1	0	0	1	0	0	0	0	0	2
07:30 AM	0	0	0	0	0	0	0	0	0	0	0	1	0	0	1	0	0	0	0	0	1
07:45 AM	0	0	0	0	0	0	0	0	0	0	0	0	0	0	0	0	0	0	0	0	0
Total	0	1	0	0	1	0	0	0	0	0	0	3	0	0	3	0	0	0	0	0	4
08:00 AM	0	0	0	0	0	0	0	0	0	0	0	0	0	0	0	0	0	0	0	0	0
08:15 AM	0	0	0	0	0	0	0	0	0	0	0	0	0	0	0	0	0	0	0	0	0
08:30 AM	0	0	0	0	0	0	0	0	0	0	0	0	0	0	0	0	0	0	0	0	0
08:45 AM	0	0	0	0	0	0	0	0	0	0	0	0	0	0	0	0	0	0	0	0	0
Total	0	0	0	0	0	0	0	0	0	0	0	0	0	0	0	0	0	0	0	0	0
Grand Total	0	1	0	0	1	0	0	0	0	0	0	3	0	0	3	0	0	0	0	0	4
Apprch %	0	100	0	0		0	0	0	0		0	100	0	0		0	0	0	0		
Total %	0	25	0	0	25	0	0	0	0	0	0	75	0	0	75	0	0	0	0	0	

	MATHILDA AVE Southbound					WB SR-237 RAMPS Westbound					MATHILDA AVE Northbound					WB SR-237 RAMPS Eastbound					
Start Time	Right	Thru	Left	Peds	App. Total	Right	Thru	Left	Peds	App. Total	Right	Thru	Left	Peds	App. Total	Right	Thru	Left	Peds	App. Total	Int. Total
Peak Hour Analysis From 07:00 AM to 08:45 AM - Peak 1 of 1																					
Peak Hour for Entire Intersection Begins at 07:00 AM																					
07:00 AM	0	0	0	0	0	0	0	0	0	0	0	**1**	0	0	**1**	0	0	0	0	0	1
07:15 AM	0	**1**	0	0	**1**	0	0	0	0	0	0	1	0	0	1	0	0	0	0	0	**2**
07:30 AM	0	0	0	0	0	0	0	0	0	0	0	1	0	0	1	0	0	0	0	0	1
07:45 AM	0	0	0	0	0	0	0	0	0	0	0	0	0	0	0	0	0	0	0	0	0
Total Volume	0	1	0	0	1	0	0	0	0	0	0	3	0	0	3	0	0	0	0	0	4
% App. Total	0	100	0	0		0	0	0	0		0	100	0	0		0	0	0	0		
PHF	.000	.250	.000	.000	.250	.000	.000	.000	.000	.000	.000	.750	.000	.000	.750	.000	.000	.000	.000	.000	.500

Traffic Data Service

Campbell, CA

(408) 377-2988

tdsbay@cs.com

File Name : 6AM FINAL
Site Code : 00000006
Start Date : 2/12/2013
Page No : 2

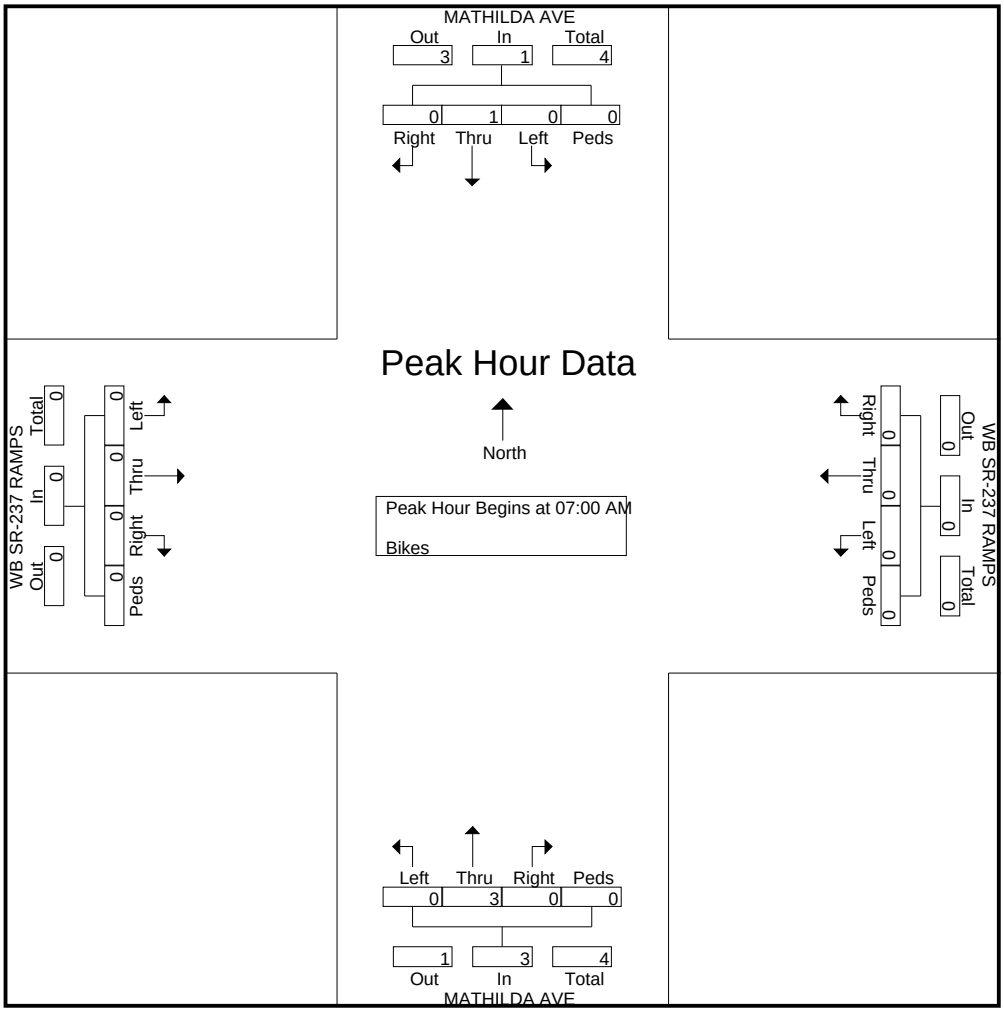

Traffic Data Service

Campbell, CA
(408) 377-2988
tdsbay@cs.com

File Name : 6PM FINAL
Site Code : 00000006
Start Date : 2/12/2013
Page No : 1

Groups Printed- Vehicles

	MATHILDA AVE Southbound					WB SR-237 RAMPS Westbound					MATHILDA AVE Northbound					WB SR-237 RAMPS Eastbound					
Start Time	Right	Thru	Left	Peds	App. Total	Right	Thru	Left	Peds	App. Total	Right	Thru	Left	Peds	App. Total	Right	Thru	Left	Peds	App. Total	Int. Total
04:30 PM	94	397	0	0	491	11	0	144	0	155	0	101	30	0	131	0	0	0	0	0	777
04:45 PM	97	379	0	0	476	6	1	160	1	168	0	87	18	0	105	0	0	0	0	0	749
Total	191	776	0	0	967	17	1	304	1	323	0	188	48	0	236	0	0	0	0	0	1526
05:00 PM	129	381	0	0	510	11	0	188	3	202	0	89	31	0	120	0	0	0	0	0	832
05:15 PM	108	401	0	0	509	9	0	197	0	206	0	100	19	0	119	0	0	0	0	0	834
05:30 PM	143	415	0	0	558	9	0	181	7	197	0	131	22	0	153	0	0	0	0	0	908
05:45 PM	113	436	0	0	549	8	0	163	4	175	0	107	24	0	131	0	0	0	0	0	855
Total	493	1633	0	0	2126	37	0	729	14	780	0	427	96	0	523	0	0	0	0	0	3429
06:00 PM	94	360	0	0	454	13	0	218	1	232	0	51	24	0	75	0	0	0	0	0	761
06:15 PM	117	386	0	0	503	11	0	214	3	228	0	73	21	0	94	0	0	0	0	0	825
Grand Total	895	3155	0	0	4050	78	1	1465	19	1563	0	739	189	0	928	0	0	0	0	0	6541
Apprch %	22.1	77.9	0	0		5	0.1	93.7	1.2		0	79.6	20.4	0		0	0	0	0		
Total %	13.7	48.2	0	0	61.9	1.2	0	22.4	0.3	23.9	0	11.3	2.9	0	14.2	0	0	0	0	0	

	MATHILDA AVE Southbound					WB SR-237 RAMPS Westbound					MATHILDA AVE Northbound					WB SR-237 RAMPS Eastbound					
Start Time	Right	Thru	Left	Peds	App. Total	Right	Thru	Left	Peds	App. Total	Right	Thru	Left	Peds	App. Total	Right	Thru	Left	Peds	App. Total	Int. Total
Peak Hour Analysis From 04:30 PM to 06:15 PM - Peak 1 of 1																					
Peak Hour for Entire Intersection Begins at 05:00 PM																					
05:00 PM	129	381	0	0	510	**11**	0	188	3	202	0	89	**31**	0	120	0	0	0	0	0	832
05:15 PM	108	401	0	0	509	9	0	**197**	0	**206**	0	100	19	0	119	0	0	0	0	0	834
05:30 PM	**143**	415	0	0	**558**	9	0	181	**7**	197	0	**131**	22	0	**153**	0	0	0	0	0	**908**
05:45 PM	113	**436**	0	0	549	8	0	163	4	175	0	107	24	0	131	0	0	0	0	0	855
Total Volume	493	1633	0	0	2126	37	0	729	14	780	0	427	96	0	523	0	0	0	0	0	3429
% App. Total																					
PHF	.862	.936	.000	.000	.953	.841	.000	.925	.500	.947	.000	.815	.774	.000	.855	.000	.000	.000	.000	.000	.944

Traffic Data Service

Campbell, CA

(408) 377-2988

tdsbay@cs.com

File Name : 6PM FINAL
Site Code : 00000006
Start Date : 2/12/2013
Page No : 2

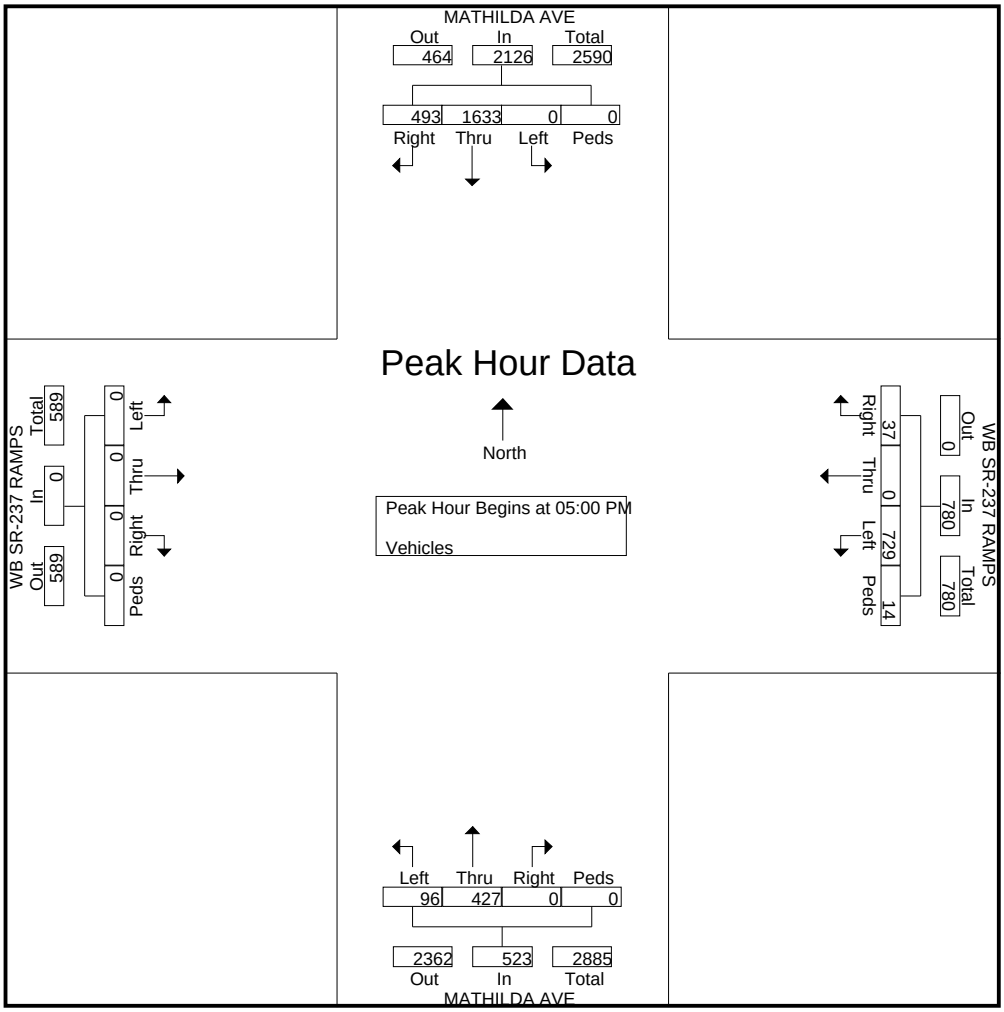

Traffic Data Service

Campbell, CA
(408) 377-2988
tdsbay@cs.com

File Name : 6PM FINAL
Site Code : 00000006
Start Date : 2/12/2013
Page No : 1

Groups Printed- Bikes

	MATHILDA AVE Southbound					WB SR-237 RAMPS Westbound					MATHILDA AVE Northbound					WB SR-237 RAMPS Eastbound					
Start Time	Right	Thru	Left	Peds	App. Total	Right	Thru	Left	Peds	App. Total	Right	Thru	Left	Peds	App. Total	Right	Thru	Left	Peds	App. Total	Int. Total
04:30 PM	0	0	0	0	0	0	0	0	0	0	0	1	0	0	1	0	0	0	0	0	1
04:45 PM	0	0	0	0	0	0	0	0	0	0	0	0	0	0	0	0	0	0	0	0	0
Total	0	0	0	0	0	0	0	0	0	0	0	1	0	0	1	0	0	0	0	0	1
05:00 PM	0	0	0	0	0	0	0	0	0	0	0	0	0	0	0	0	0	0	0	0	0
05:15 PM	0	0	0	0	0	0	0	0	0	0	0	0	0	0	0	0	0	0	0	0	0
05:30 PM	0	0	0	0	0	0	0	0	0	0	0	1	0	0	1	0	0	0	0	0	1
05:45 PM	0	1	0	0	1	0	0	0	0	0	0	0	0	0	0	0	0	0	0	0	1
Total	0	1	0	0	1	0	0	0	0	0	0	1	0	0	1	0	0	0	0	0	2
06:00 PM	0	0	0	0	0	0	0	0	0	0	0	0	0	0	0	0	0	0	0	0	0
06:15 PM	0	0	0	0	0	0	0	0	0	0	0	0	0	0	0	0	0	0	0	0	0
Grand Total	0	1	0	0	1	0	0	0	0	0	0	2	0	0	2	0	0	0	0	0	3
Apprch %	0	100	0	0		0	0	0	0		0	100	0	0		0	0	0	0		
Total %	0	33.3	0	0	33.3	0	0	0	0	0	0	66.7	0	0	66.7	0	0	0	0	0	

	MATHILDA AVE Southbound					WB SR-237 RAMPS Westbound					MATHILDA AVE Northbound					WB SR-237 RAMPS Eastbound					
Start Time	Right	Thru	Left	Peds	App. Total	Right	Thru	Left	Peds	App. Total	Right	Thru	Left	Peds	App. Total	Right	Thru	Left	Peds	App. Total	Int. Total
Peak Hour Analysis From 04:30 PM to 06:15 PM - Peak 1 of 1																					
Peak Hour for Entire Intersection Begins at 05:00 PM																					
05:00 PM	0	0	0	0	0	0	0	0	0	0	0	0	0	0	0	0	0	0	0	0	0
05:15 PM	0	0	0	0	0	0	0	0	0	0	0	0	0	0	0	0	0	0	0	0	0
05:30 PM	0	0	0	0	0	0	0	0	0	0	0	**1**	0	0	**1**	0	0	0	0	0	**1**
05:45 PM	0	**1**	0	0	**1**	0	0	0	0	0	0	0	0	0	0	0	0	0	0	0	1
Total Volume	0	1	0	0	1	0	0	0	0	0	0	1	0	0	1	0	0	0	0	0	2
% App. Total	0	100	0	0		0	0	0	0		0	100	0	0		0	0	0	0		
PHF	.000	.250	.000	.000	.250	.000	.000	.000	.000	.000	.000	.250	.000	.000	.250	.000	.000	.000	.000	.000	.500

Traffic Data Service

Campbell, CA

(408) 377-2988

tdsbay@cs.com

File Name : 6PM FINAL
Site Code : 00000006
Start Date : 2/12/2013
Page No : 2

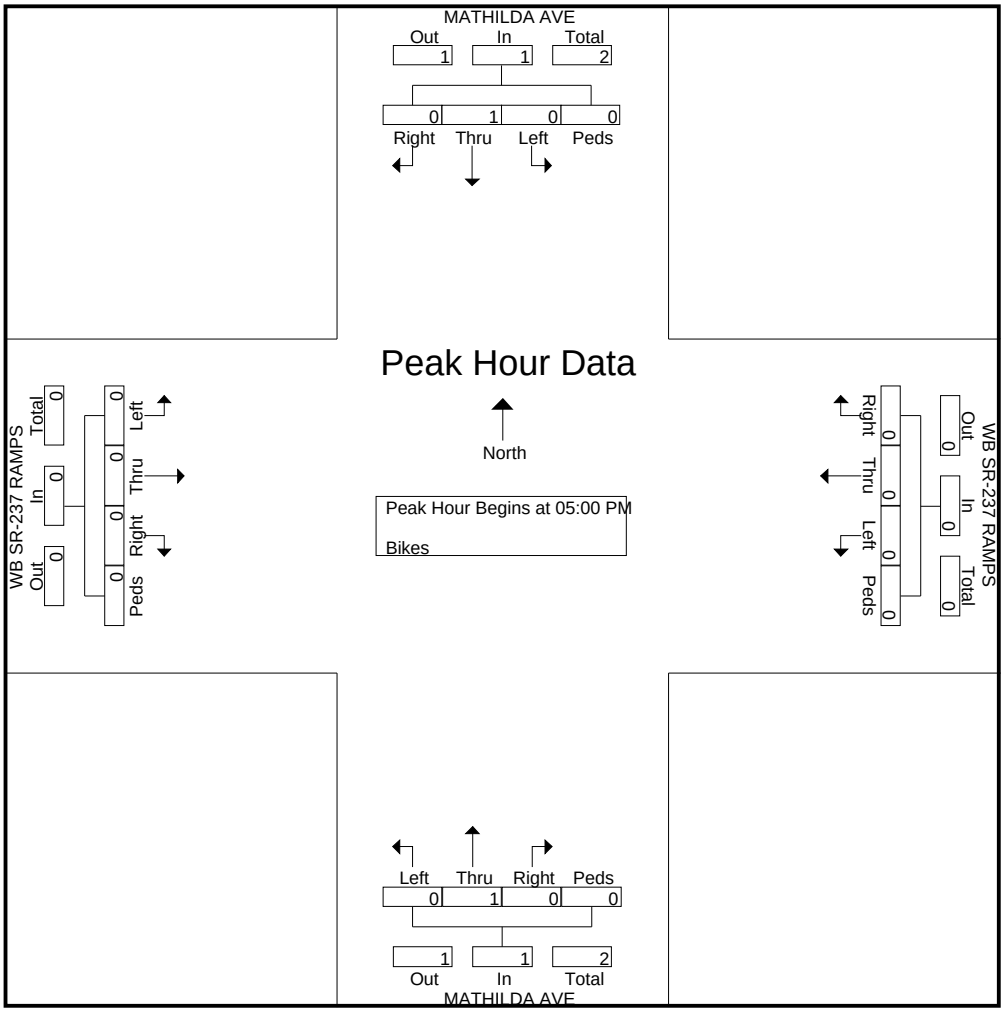

Traffic Data Service

Campbell, CA
(408) 377-2988
tdsbay@cs.com

File Name : 7AM FINAL
Site Code : 00000007
Start Date : 2/12/2013
Page No : 1

Groups Printed- Vehicles

	MATHILDA AVE Southbound					EB SR-237 RAMPS Westbound					MATHILDA AVE Northbound					EB SR-237 RAMPS Eastbound					
Start Time	Right	Thru	Left	Peds	App. Total	Right	Thru	Left	Peds	App. Total	Right	Thru	Left	Peds	App. Total	Right	Thru	Left	Peds	App. Total	Int. Total
07:00 AM	0	139	6	0	145	0	0	0	0	0	81	235	0	0	316	14	0	136	0	150	611
07:15 AM	0	133	12	0	145	0	0	0	1	1	111	278	0	0	389	11	0	129	0	140	675
07:30 AM	0	205	8	0	213	0	0	0	2	2	131	332	0	0	463	13	0	122	0	135	813
07:45 AM	0	198	11	0	209	0	0	0	1	1	160	355	0	0	515	9	0	208	0	217	942
Total	0	675	37	0	712	0	0	0	4	4	483	1200	0	0	1683	47	0	595	0	642	3041
08:00 AM	0	195	16	0	211	0	0	0	0	0	147	399	1	0	547	18	0	169	0	187	945
08:15 AM	0	199	11	0	210	0	0	0	0	0	166	343	0	0	509	14	0	197	0	211	930
08:30 AM	0	209	12	0	221	0	0	0	0	0	213	385	0	0	598	13	0	181	0	194	1013
08:45 AM	0	207	12	0	219	0	0	0	0	0	207	461	0	0	668	14	0	197	0	211	1098
Total	0	810	51	0	861	0	0	0	0	0	733	1588	1	0	2322	59	0	744	0	803	3986
Grand Total	0	1485	88	0	1573	0	0	0	4	4	1216	2788	1	0	4005	106	0	1339	0	1445	7027
Apprch %	0	94.4	5.6	0		0	0	0	100		30.4	69.6	0	0		7.3	0	92.7	0		
Total %	0	21.1	1.3	0	22.4	0	0	0	0.1	0.1	17.3	39.7	0	0	57	1.5	0	19.1	0	20.6	

	MATHILDA AVE Southbound					EB SR-237 RAMPS Westbound					MATHILDA AVE Northbound					EB SR-237 RAMPS Eastbound					
Start Time	Right	Thru	Left	Peds	App. Total	Right	Thru	Left	Peds	App. Total	Right	Thru	Left	Peds	App. Total	Right	Thru	Left	Peds	App. Total	Int. Total
Peak Hour Analysis From 07:00 AM to 08:45 AM - Peak 1 of 1																					
Peak Hour for Entire Intersection Begins at 08:00 AM																					
08:00 AM	0	195	**16**	0	211	0	0	0	0	0	147	399	**1**	0	547	**18**	0	169	0	187	945
08:15 AM	0	199	11	0	210	0	0	0	0	0	166	343	0	0	509	14	0	**197**	0	**211**	930
08:30 AM	0	**209**	12	0	**221**	0	0	0	0	0	**213**	385	0	0	598	13	0	181	0	194	1013
08:45 AM	0	207	12	0	219	0	0	0	0	0	207	**461**	0	0	**668**	14	0	197	0	211	**1098**
Total Volume	0	810	51	0	861	0	0	0	0	0	733	1588	1	0	2322	59	0	744	0	803	3986
% App. Total																					
PHF	.000	.969	.797	.000	.974	.000	.000	.000	.000	.000	.860	.861	.250	.000	.869	.819	.000	.944	.000	.951	.908

Traffic Data Service

Campbell, CA
(408) 377-2988
tdsbay@cs.com

File Name : 7AM FINAL
Site Code : 00000007
Start Date : 2/12/2013
Page No : 2

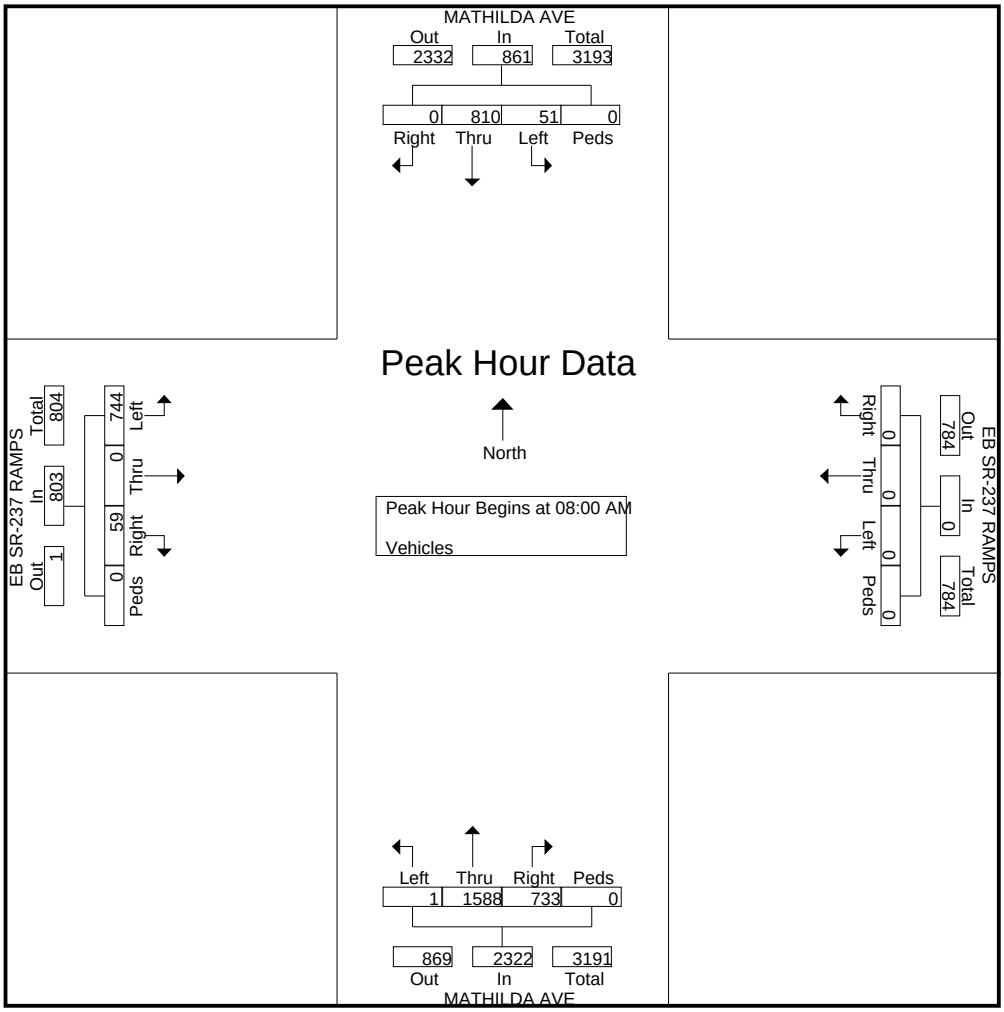

Traffic Data Service

Campbell, CA
(408) 377-2988
tdsbay@cs.com

File Name : 7AM FINAL
Site Code : 00000007
Start Date : 2/12/2013
Page No : 1

Groups Printed- Bikes

	MATHILDA AVE Southbound					EB SR-237 RAMPS Westbound					MATHILDA AVE Northbound					EB SR-237 RAMPS Eastbound					
Start Time	Right	Thru	Left	Peds	App. Total	Right	Thru	Left	Peds	App. Total	Right	Thru	Left	Peds	App. Total	Right	Thru	Left	Peds	App. Total	Int. Total
07:00 AM	0	0	0	0	0	0	0	0	0	0	0	1	0	0	1	0	0	0	0	0	1
07:15 AM	0	0	0	0	0	0	0	0	0	0	0	1	0	0	1	0	0	0	0	0	1
07:30 AM	0	0	0	0	0	0	0	0	0	0	0	0	0	0	0	0	0	0	0	0	0
07:45 AM	0	0	0	0	0	0	0	0	0	0	0	1	0	0	1	0	0	0	0	0	1
Total	0	0	0	0	0	0	0	0	0	0	0	3	0	0	3	0	0	0	0	0	3
08:00 AM	0	0	0	0	0	0	0	0	0	0	0	0	0	0	0	0	0	0	0	0	0
08:15 AM	0	0	0	0	0	0	0	0	0	0	0	0	0	0	0	0	0	0	0	0	0
08:30 AM	0	0	0	0	0	0	0	0	0	0	0	0	0	0	0	0	0	0	0	0	0
08:45 AM	0	0	0	0	0	0	0	0	0	0	0	0	0	0	0	0	0	0	0	0	0
Total	0	0	0	0	0	0	0	0	0	0	0	0	0	0	0	0	0	0	0	0	0
Grand Total	0	0	0	0	0	0	0	0	0	0	0	3	0	0	3	0	0	0	0	0	3
Apprch %	0	0	0	0		0	0	0	0		0	100	0	0		0	0	0	0		
Total %	0	0	0	0	0	0	0	0	0	0	0	100	0	0	100	0	0	0	0	0	

	MATHILDA AVE Southbound					EB SR-237 RAMPS Westbound					MATHILDA AVE Northbound					EB SR-237 RAMPS Eastbound					
Start Time	Right	Thru	Left	Peds	App. Total	Right	Thru	Left	Peds	App. Total	Right	Thru	Left	Peds	App. Total	Right	Thru	Left	Peds	App. Total	Int. Total
Peak Hour Analysis From 07:00 AM to 08:45 AM - Peak 1 of 1																					
Peak Hour for Entire Intersection Begins at 07:00 AM																					
07:00 AM	0	0	0	0	0	0	0	0	0	0	0	**1**	0	0	**1**	0	0	0	0	0	**1**
07:15 AM	0	0	0	0	0	0	0	0	0	0	0	1	0	0	1	0	0	0	0	0	1
07:30 AM	0	0	0	0	0	0	0	0	0	0	0	0	0	0	0	0	0	0	0	0	0
07:45 AM	0	0	0	0	0	0	0	0	0	0	0	1	0	0	1	0	0	0	0	0	1
Total Volume	0	0	0	0	0	0	0	0	0	0	0	3	0	0	3	0	0	0	0	0	3
% App. Total	0	0	0	0		0	0	0	0		0	100	0	0		0	0	0	0		
PHF	.000	.000	.000	.000	.000	.000	.000	.000	.000	.000	.000	.750	.000	.000	.750	.000	.000	.000	.000	.000	.750

Traffic Data Service

Campbell, CA
(408) 377-2988
tdsbay@cs.com

File Name : 7AM FINAL
Site Code : 00000007
Start Date : 2/12/2013
Page No : 2

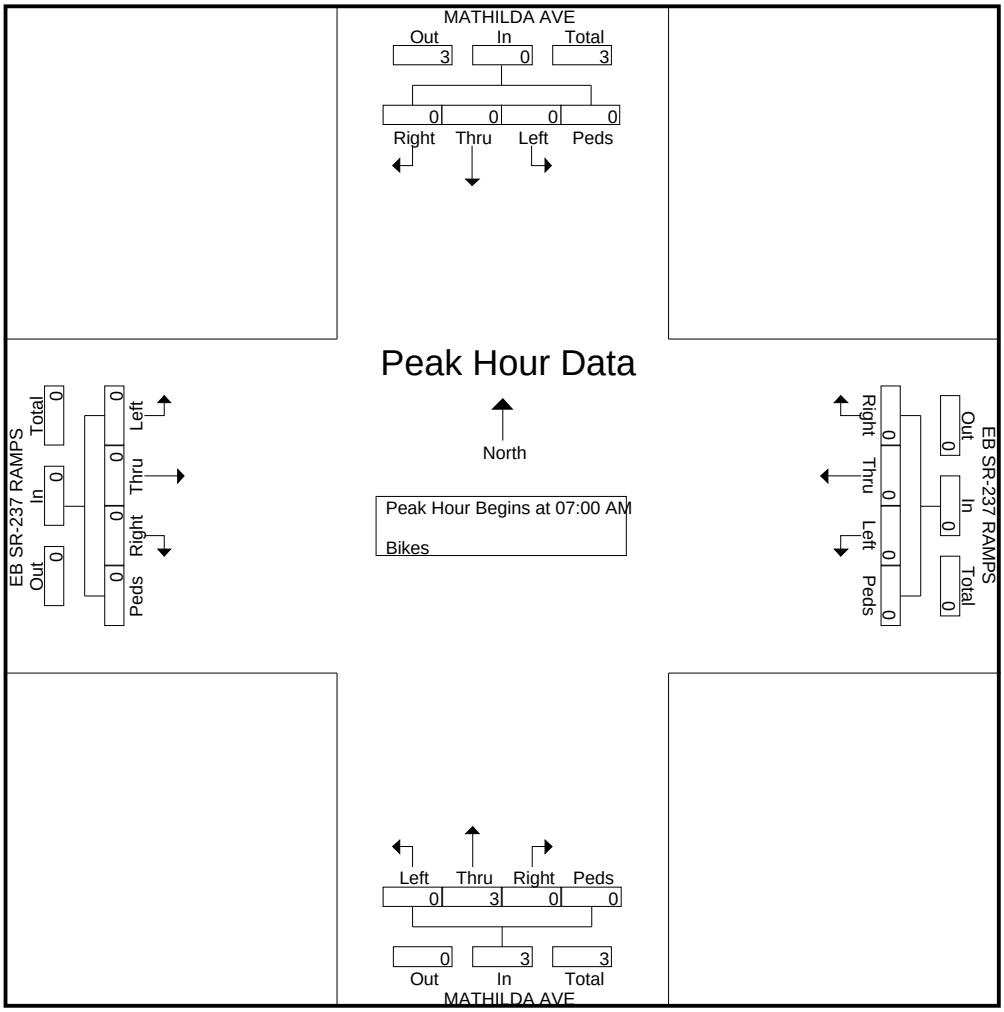

Traffic Data Service

Campbell, CA
(408) 377-2988
tdsbay@cs.com

File Name : 7PM FINAL
Site Code : 00000007
Start Date : 2/12/2013
Page No : 1

Groups Printed- Vehicles

	MATHILDA AVE Southbound					EB SR-237 RAMPS Westbound					MATHILDA AVE Northbound					EB SR-237 RAMPS Eastbound					
Start Time	Right	Thru	Left	Peds	App. Total	Right	Thru	Left	Peds	App. Total	Right	Thru	Left	Peds	App. Total	Right	Thru	Left	Peds	App. Total	Int. Total
04:30 PM	0	424	97	0	521	0	0	0	1	1	127	90	0	0	217	26	0	40	0	66	805
04:45 PM	0	491	80	0	571	0	0	0	0	0	120	75	0	0	195	26	0	29	0	55	821
Total	0	915	177	0	1092	0	0	0	1	1	247	165	0	0	412	52	0	69	0	121	1626
05:00 PM	0	542	90	0	632	0	0	0	4	4	175	89	0	0	264	35	0	29	0	64	964
05:15 PM	0	543	93	0	636	0	0	0	1	1	152	90	0	0	242	56	0	38	0	94	973
05:30 PM	0	517	77	0	594	0	0	0	6	6	139	114	0	0	253	47	2	39	0	88	941
05:45 PM	0	528	82	0	610	0	0	0	7	7	131	92	0	0	223	38	0	33	0	71	911
Total	0	2130	342	0	2472	0	0	0	18	18	597	385	0	0	982	176	2	139	0	317	3789
06:00 PM	0	467	80	0	547	0	0	0	2	2	139	59	0	0	198	32	0	21	0	53	800
06:15 PM	0	496	76	0	572	0	0	0	1	1	144	66	0	0	210	25	0	23	0	48	831
Grand Total	0	4008	675	0	4683	0	0	0	22	22	1127	675	0	0	1802	285	2	252	0	539	7046
Apprch %	0	85.6	14.4	0		0	0	0	100		62.5	37.5	0	0		52.9	0.4	46.8	0		
Total %	0	56.9	9.6	0	66.5	0	0	0	0.3	0.3	16	9.6	0	0	25.6	4	0	3.6	0	7.6	

	MATHILDA AVE Southbound					EB SR-237 RAMPS Westbound					MATHILDA AVE Northbound					EB SR-237 RAMPS Eastbound					
Start Time	Right	Thru	Left	Peds	App. Total	Right	Thru	Left	Peds	App. Total	Right	Thru	Left	Peds	App. Total	Right	Thru	Left	Peds	App. Total	Int. Total
Peak Hour Analysis From 04:30 PM to 06:15 PM - Peak 1 of 1																					
Peak Hour for Entire Intersection Begins at 05:00 PM																					
05:00 PM	0	542	90	0	632	0	0	0	4	4	**175**	89	0	0	**264**	35	0	29	0	64	964
05:15 PM	0	**543**	**93**	0	**636**	0	0	0	1	1	152	90	0	0	242	**56**	0	38	0	**94**	**973**
05:30 PM	0	517	77	0	594	0	0	0	6	6	139	**114**	0	0	253	47	**2**	**39**	0	88	941
05:45 PM	0	528	82	0	610	0	0	0	**7**	**7**	131	92	0	0	223	38	0	33	0	71	911
Total Volume	0	2130	342	0	2472	0	0	0	18	18	597	385	0	0	982	176	2	139	0	317	3789
% App. Total																					
PHF	.000	.981	.919	.000	.972	.000	.000	.000	.643	.643	.853	.844	.000	.000	.930	.786	.250	.891	.000	.843	.974

Traffic Data Service

Campbell, CA
(408) 377-2988
tdsbay@cs.com

File Name : 7PM FINAL
Site Code : 00000007
Start Date : 2/12/2013
Page No : 2

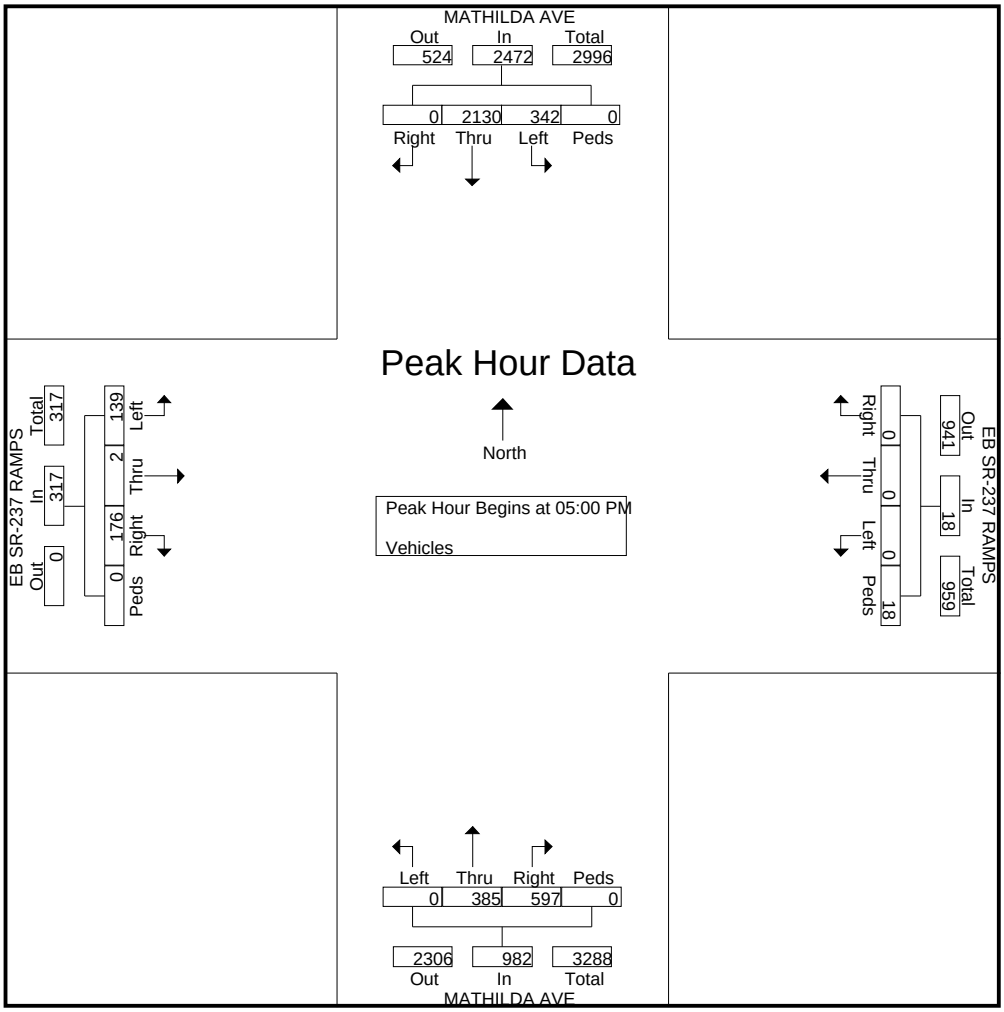

Traffic Data Service

Campbell, CA
(408) 377-2988
tdsbay@cs.com

File Name : 7PM FINAL
Site Code : 00000007
Start Date : 2/12/2013
Page No : 1

Groups Printed- Bikes

	MATHILDA AVE Southbound					EB SR-237 RAMPS Westbound					MATHILDA AVE Northbound					EB SR-237 RAMPS Eastbound					
Start Time	Right	Thru	Left	Peds	App. Total	Right	Thru	Left	Peds	App. Total	Right	Thru	Left	Peds	App. Total	Right	Thru	Left	Peds	App. Total	Int. Total
04:30 PM	0	0	0	0	0	0	0	0	0	0	0	0	0	0	0	0	0	0	0	0	0
04:45 PM	0	0	0	0	0	0	0	0	0	0	0	0	0	0	0	0	0	0	0	0	0
Total	0	0	0	0	0	0	0	0	0	0	0	0	0	0	0	0	0	0	0	0	0
05:00 PM	0	0	0	0	0	0	0	0	0	0	0	0	0	0	0	0	0	0	0	0	0
05:15 PM	0	0	0	0	0	0	0	0	0	0	0	0	0	0	0	0	0	0	0	0	0
05:30 PM	0	0	0	0	0	0	0	0	0	0	0	1	0	0	1	0	0	0	0	0	1
05:45 PM	0	1	0	0	1	0	0	0	0	0	0	0	0	0	0	0	0	0	0	0	1
Total	0	1	0	0	1	0	0	0	0	0	0	1	0	0	1	0	0	0	0	0	2
06:00 PM	0	0	0	0	0	0	0	0	0	0	0	0	0	0	0	0	0	0	0	0	0
06:15 PM	0	0	0	0	0	0	0	0	0	0	0	0	0	0	0	0	0	0	0	0	0
Grand Total	0	1	0	0	1	0	0	0	0	0	0	1	0	0	1	0	0	0	0	0	2
Apprch %	0	100	0	0		0	0	0	0		0	100	0	0		0	0	0	0		
Total %	0	50	0	0	50	0	0	0	0	0	0	50	0	0	50	0	0	0	0	0	

	MATHILDA AVE Southbound					EB SR-237 RAMPS Westbound					MATHILDA AVE Northbound					EB SR-237 RAMPS Eastbound					
Start Time	Right	Thru	Left	Peds	App. Total	Right	Thru	Left	Peds	App. Total	Right	Thru	Left	Peds	App. Total	Right	Thru	Left	Peds	App. Total	Int. Total
Peak Hour Analysis From 04:30 PM to 06:15 PM - Peak 1 of 1																					
Peak Hour for Entire Intersection Begins at 05:00 PM																					
05:00 PM	0	0	0	0	0	0	0	0	0	0	0	0	0	0	0	0	0	0	0	0	0
05:15 PM	0	0	0	0	0	0	0	0	0	0	0	0	0	0	0	0	0	0	0	0	0
05:30 PM	0	0	0	0	0	0	0	0	0	0	0	**1**	0	0	**1**	0	0	0	0	0	**1**
05:45 PM	0	**1**	0	0	**1**	0	0	0	0	0	0	0	0	0	0	0	0	0	0	0	1
Total Volume	0	1	0	0	1	0	0	0	0	0	0	1	0	0	1	0	0	0	0	0	2
% App. Total	0	100	0	0		0	0	0	0		0	100	0	0		0	0	0	0		
PHF	.000	.250	.000	.000	.250	.000	.000	.000	.000	.000	.000	.250	.000	.000	.250	.000	.000	.000	.000	.000	.500

Traffic Data Service

Campbell, CA
(408) 377-2988
tdsbay@cs.com

File Name : 7PM FINAL
Site Code : 00000007
Start Date : 2/12/2013
Page No : 2

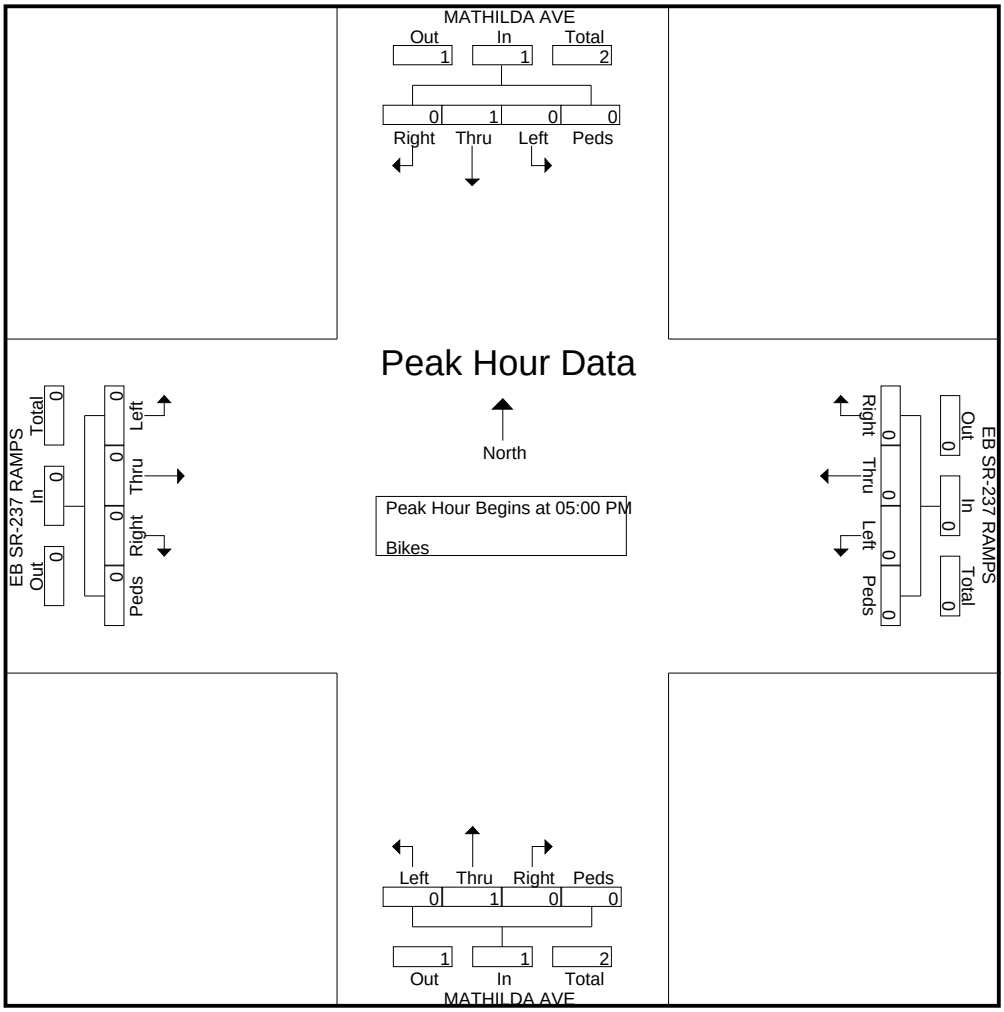

Traffic Data Service

Campbell, CA
(408) 377-2988
tdsbay@cs.com

File Name : 8AM FINAL
Site Code : 00000008
Start Date : 2/12/2013
Page No : 1

Groups Printed- Vehicles

	MATHILDA AVE Southbound					ROSS DR Westbound					MATHILDA AVE Northbound					ROSS DR Eastbound					
Start Time	Right	Thru	Left	Peds	App. Total	Right	Thru	Left	Peds	App. Total	Right	Thru	Left	Peds	App. Total	Right	Thru	Left	Peds	App. Total	Int. Total
07:00 AM	12	121	11	0	144	28	1	21	0	50	19	289	7	0	315	3	11	9	0	23	532
07:15 AM	6	132	15	0	153	38	3	18	0	59	21	325	5	0	351	4	10	15	0	29	592
07:30 AM	14	173	18	0	205	26	8	14	0	48	16	414	6	0	436	7	15	8	0	30	719
07:45 AM	9	181	16	0	206	46	10	24	0	80	28	455	9	0	492	8	12	14	0	34	812
Total	41	607	60	0	708	138	22	77	0	237	84	1483	27	0	1594	22	48	46	0	116	2655
08:00 AM	10	189	25	0	224	24	7	12	0	43	23	524	8	0	555	1	5	10	0	16	838
08:15 AM	11	195	11	0	217	22	2	14	0	38	27	483	11	0	521	3	11	11	0	25	801
08:30 AM	8	203	9	0	220	86	3	26	0	115	25	503	12	0	540	3	17	18	0	38	913
08:45 AM	7	201	5	0	213	81	10	31	0	122	15	551	16	0	582	7	20	27	0	54	971
Total	36	788	50	0	874	213	22	83	0	318	90	2061	47	0	2198	14	53	66	0	133	3523
Grand Total	77	1395	110	0	1582	351	44	160	0	555	174	3544	74	0	3792	36	101	112	0	249	6178
Apprch %	4.9	88.2	7	0		63.2	7.9	28.8	0		4.6	93.5	2	0		14.5	40.6	45	0		
Total %	1.2	22.6	1.8	0	25.6	5.7	0.7	2.6	0	9	2.8	57.4	1.2	0	61.4	0.6	1.6	1.8	0	4	

	MATHILDA AVE Southbound					ROSS DR Westbound					MATHILDA AVE Northbound					ROSS DR Eastbound					
Start Time	Right	Thru	Left	Peds	App. Total	Right	Thru	Left	Peds	App. Total	Right	Thru	Left	Peds	App. Total	Right	Thru	Left	Peds	App. Total	Int. Total
Peak Hour Analysis From 07:00 AM to 08:45 AM - Peak 1 of 1																					
Peak Hour for Entire Intersection Begins at 08:00 AM																					
08:00 AM	10	189	**25**	0	**224**	24	7	12	0	43	23	524	8	0	555	1	5	10	0	16	838
08:15 AM	**11**	195	11	0	217	22	2	14	0	38	**27**	483	11	0	521	3	11	11	0	25	801
08:30 AM	8	**203**	9	0	220	**86**	3	26	0	115	25	503	12	0	540	3	17	18	0	38	913
08:45 AM	7	201	5	0	213	81	**10**	**31**	0	**122**	15	**551**	**16**	0	**582**	**7**	**20**	**27**	0	**54**	**971**
Total Volume	36	788	50	0	874	213	22	83	0	318	90	2061	47	0	2198	14	53	66	0	133	3523
% App. Total	4.1	90.2	5.7	0		67	6.9	26.1	0		4.1	93.8	2.1	0		10.5	39.8	49.6	0		
PHF	.818	.970	.500	.000	.975	.619	.550	.669	.000	.652	.833	.935	.734	.000	.944	.500	.663	.611	.000	.616	.907

Traffic Data Service

Campbell, CA
(408) 377-2988
tdsbay@cs.com

File Name : 8AM FINAL
Site Code : 00000008
Start Date : 2/12/2013
Page No : 2

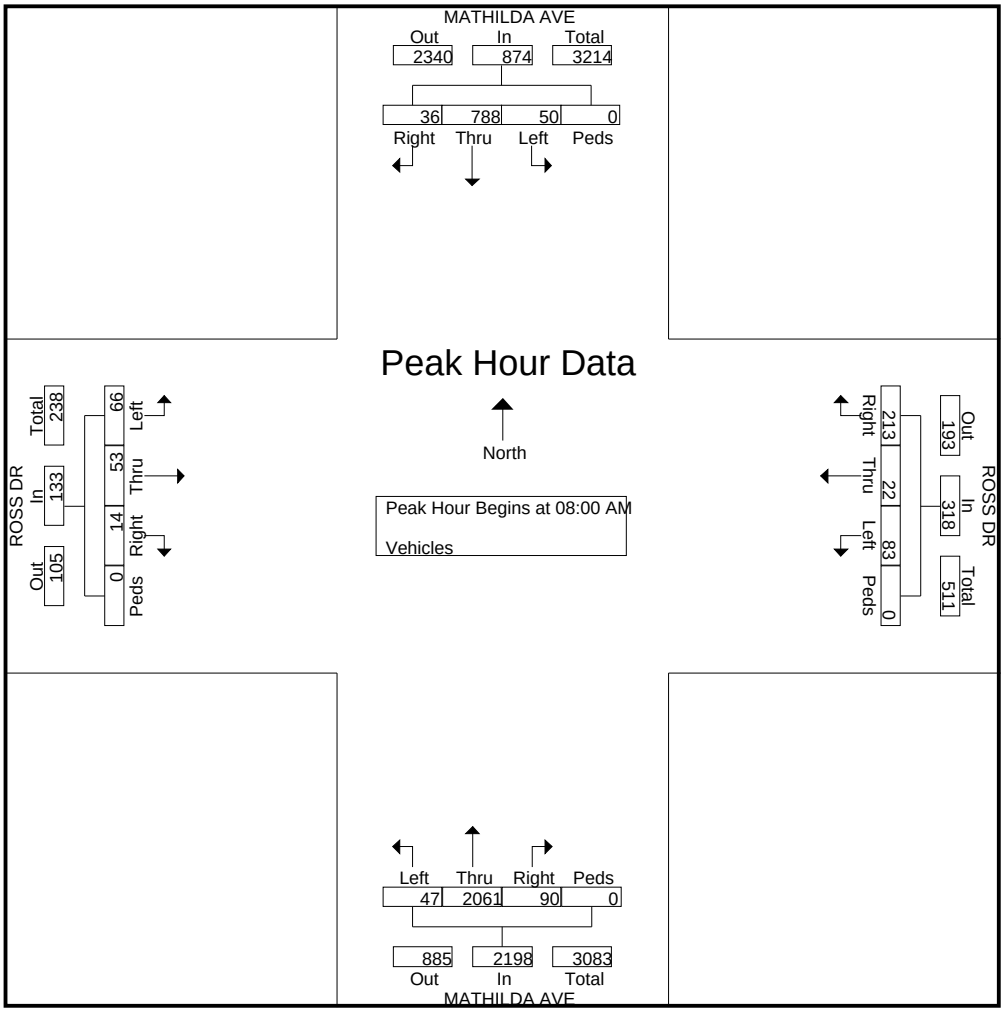

Traffic Data Service

Campbell, CA
(408) 377-2988
tdsbay@cs.com

File Name : 8AM FINAL
Site Code : 00000008
Start Date : 2/12/2013
Page No : 1

Groups Printed- Bikes

	MATHILDA AVE Southbound					ROSS DR Westbound					MATHILDA AVE Northbound					ROSS DR Eastbound					
Start Time	Right	Thru	Left	Peds	App. Total	Right	Thru	Left	Peds	App. Total	Right	Thru	Left	Peds	App. Total	Right	Thru	Left	Peds	App. Total	Int. Total
07:00 AM	0	0	0	0	0	1	0	0	0	1	0	0	0	0	0	0	0	0	0	0	1
07:15 AM	0	0	0	0	0	0	0	0	0	0	0	1	0	0	1	0	0	0	0	0	1
07:30 AM	0	0	0	0	0	0	0	0	0	0	0	0	0	0	0	0	0	0	0	0	0
07:45 AM	0	0	0	0	0	0	0	0	0	0	0	1	0	0	1	0	0	0	0	0	1
Total	0	0	0	0	0	1	0	0	0	1	0	2	0	0	2	0	0	0	0	0	3
08:00 AM	0	0	0	0	0	0	0	0	0	0	0	0	0	0	0	0	0	0	0	0	0
08:15 AM	0	0	0	0	0	0	0	0	0	0	0	0	0	0	0	0	0	0	0	0	0
08:30 AM	0	0	0	0	0	0	0	0	0	0	0	0	0	0	0	0	0	0	0	0	0
08:45 AM	0	0	0	0	0	0	0	0	0	0	0	0	0	0	0	0	0	0	0	0	0
Total	0	0	0	0	0	0	0	0	0	0	0	0	0	0	0	0	0	0	0	0	0
Grand Total	0	0	0	0	0	1	0	0	0	1	0	2	0	0	2	0	0	0	0	0	3
Apprch %	0	0	0	0		100	0	0	0		0	100	0	0		0	0	0	0		
Total %	0	0	0	0	0	33.3	0	0	0	33.3	0	66.7	0	0	66.7	0	0	0	0	0	

	MATHILDA AVE Southbound					ROSS DR Westbound					MATHILDA AVE Northbound					ROSS DR Eastbound					
Start Time	Right	Thru	Left	Peds	App. Total	Right	Thru	Left	Peds	App. Total	Right	Thru	Left	Peds	App. Total	Right	Thru	Left	Peds	App. Total	Int. Total
Peak Hour Analysis From 07:00 AM to 08:45 AM - Peak 1 of 1																					
Peak Hour for Entire Intersection Begins at 07:00 AM																					
07:00 AM	0	0	0	0	0	**1**	0	0	0	**1**	0	0	0	0	0	0	0	0	0	0	**1**
07:15 AM	0	0	0	0	0	0	0	0	0	0	0	**1**	0	0	**1**	0	0	0	0	0	1
07:30 AM	0	0	0	0	0	0	0	0	0	0	0	0	0	0	0	0	0	0	0	0	0
07:45 AM	0	0	0	0	0	0	0	0	0	0	0	1	0	0	1	0	0	0	0	0	1
Total Volume	0	0	0	0	0	1	0	0	0	1	0	2	0	0	2	0	0	0	0	0	3
% App. Total	0	0	0	0		100	0	0	0		0	100	0	0		0	0	0	0		
PHF	.000	.000	.000	.000	.000	.250	.000	.000	.000	.250	.000	.500	.000	.000	.500	.000	.000	.000	.000	.000	.750

Traffic Data Service

Campbell, CA

(408) 377-2988

tdsbay@cs.com

File Name : 8AM FINAL
Site Code : 00000008
Start Date : 2/12/2013
Page No : 2

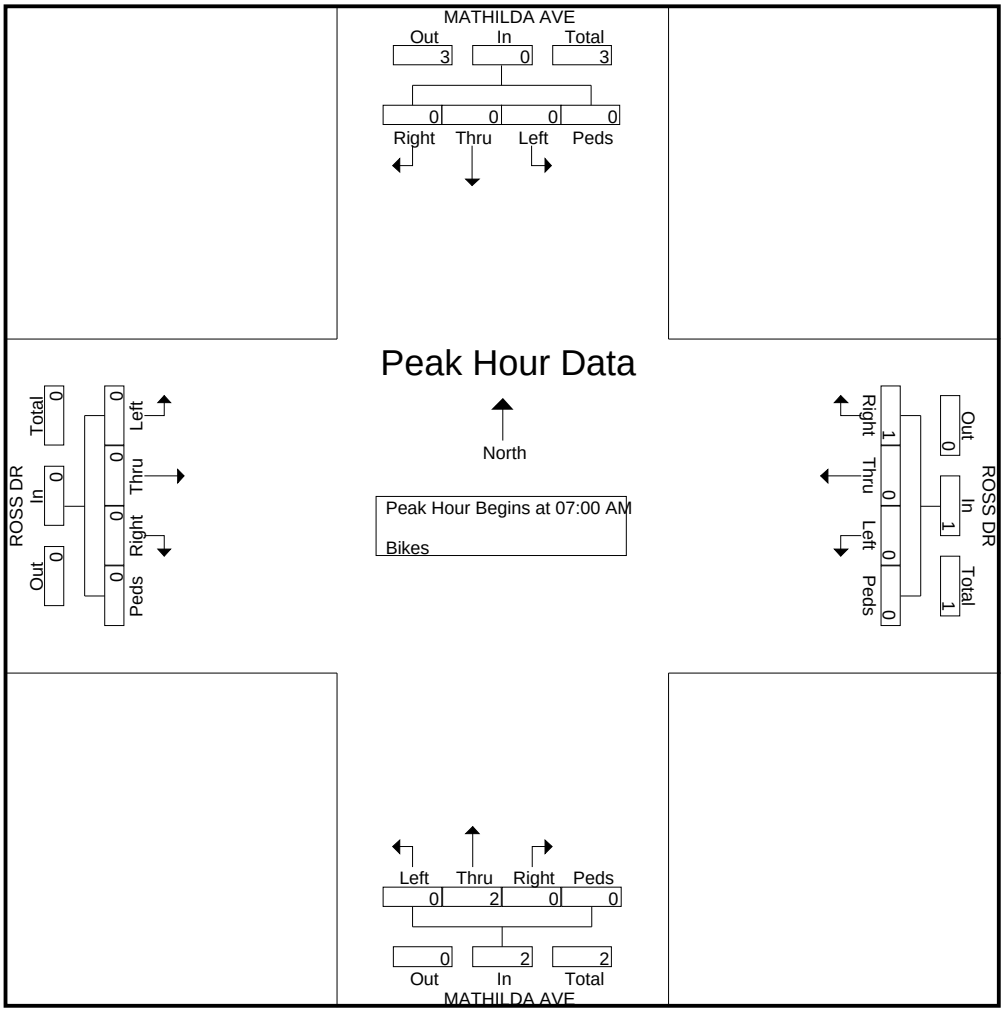

Traffic Data Service

Campbell, CA
(408) 377-2988
tdsbay@cs.com

File Name : 8PM FINAL
Site Code : 00000008
Start Date : 2/12/2013
Page No : 1

Groups Printed- Vehicles

	MATHILDA AVE Southbound					ROSS DR Westbound					MATHILDA AVE Northbound					ROSS DR Eastbound					
Start Time	Right	Thru	Left	Peds	App. Total	Right	Thru	Left	Peds	App. Total	Right	Thru	Left	Peds	App. Total	Right	Thru	Left	Peds	App. Total	Int. Total
04:30 PM	11	399	26	0	436	20	2	36	0	58	25	199	26	0	250	3	18	11	0	32	776
04:45 PM	15	475	28	0	518	29	4	28	0	61	63	169	28	0	260	8	19	9	0	36	875
Total	26	874	54	0	954	49	6	64	0	119	88	368	54	0	510	11	37	20	0	68	1651
05:00 PM	16	527	26	0	569	22	13	46	0	81	58	196	25	0	279	7	44	11	0	62	991
05:15 PM	21	545	32	0	598	25	10	50	0	85	57	215	14	0	286	6	35	3	0	44	1013
05:30 PM	25	526	28	0	579	24	15	34	0	73	66	216	26	0	308	4	37	10	0	51	1011
05:45 PM	23	509	41	0	573	23	10	39	0	72	71	191	22	0	284	11	27	14	0	52	981
Total	85	2107	127	0	2319	94	48	169	0	311	252	818	87	0	1157	28	143	38	0	209	3996
06:00 PM	22	452	35	0	509	22	15	35	0	72	65	170	25	0	260	7	29	13	0	49	890
06:15 PM	19	475	24	0	518	19	12	29	0	60	52	177	17	0	246	9	28	12	0	49	873
Grand Total	152	3908	240	0	4300	184	81	297	0	562	457	1533	183	0	2173	55	237	83	0	375	7410
Apprch %	3.5	90.9	5.6	0		32.7	14.4	52.8	0		21	70.5	8.4	0		14.7	63.2	22.1	0		
Total %	2.1	52.7	3.2	0	58	2.5	1.1	4	0	7.6	6.2	20.7	2.5	0	29.3	0.7	3.2	1.1	0	5.1	

	MATHILDA AVE Southbound					ROSS DR Westbound					MATHILDA AVE Northbound					ROSS DR Eastbound					
Start Time	Right	Thru	Left	Peds	App. Total	Right	Thru	Left	Peds	App. Total	Right	Thru	Left	Peds	App. Total	Right	Thru	Left	Peds	App. Total	Int. Total
Peak Hour Analysis From 04:30 PM to 06:15 PM - Peak 1 of 1																					
Peak Hour for Entire Intersection Begins at 05:00 PM																					
05:00 PM	16	527	26	0	569	22	13	46	0	81	58	196	25	0	279	7	**44**	11	0	**62**	991
05:15 PM	21	**545**	32	0	**598**	**25**	10	**50**	0	**85**	57	215	14	0	286	6	35	3	0	44	**1013**
05:30 PM	**25**	526	28	0	579	24	**15**	34	0	73	66	**216**	**26**	0	**308**	4	37	10	0	51	1011
05:45 PM	23	509	**41**	0	573	23	10	39	0	72	**71**	191	22	0	284	**11**	27	**14**	0	52	981
Total Volume	85	2107	127	0	2319	94	48	169	0	311	252	818	87	0	1157	28	143	38	0	209	3996
% App. Total	3.7	90.9	5.5	0		30.2	15.4	54.3	0		21.8	70.7	7.5	0		13.4	68.4	18.2	0		
PHF	.850	.967	.774	.000	.969	.940	.800	.845	.000	.915	.887	.947	.837	.000	.939	.636	.813	.679	.000	.843	.986

Traffic Data Service

Campbell, CA

(408) 377-2988

tdsbay@cs.com

File Name : 8PM FINAL
Site Code : 00000008
Start Date : 2/12/2013
Page No : 2

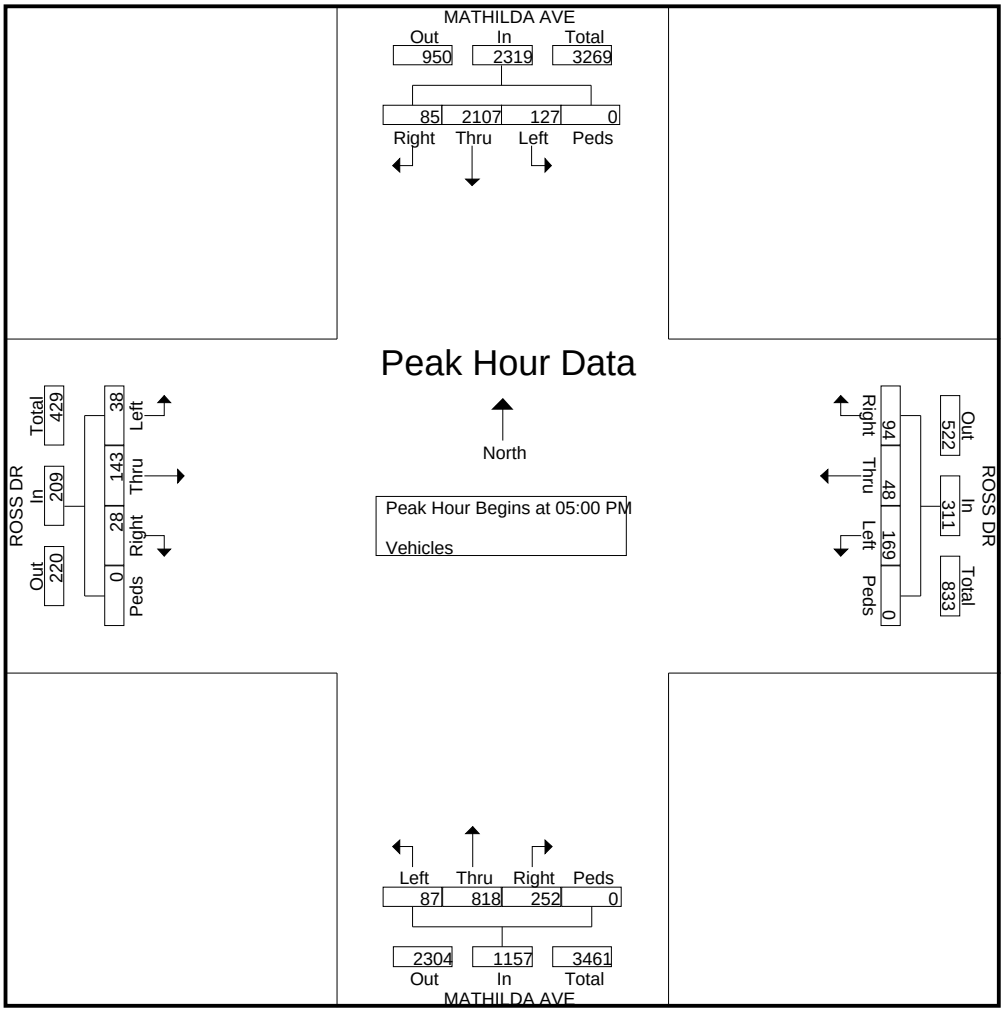

Traffic Data Service

Campbell, CA
(408) 377-2988
tdsbay@cs.com

File Name : 8PM FINAL
Site Code : 00000008
Start Date : 2/12/2013
Page No : 1

Groups Printed- Bikes

	MATHILDA AVE Southbound					ROSS DR Westbound					MATHILDA AVE Northbound					ROSS DR Eastbound					
Start Time	Right	Thru	Left	Peds	App. Total	Right	Thru	Left	Peds	App. Total	Right	Thru	Left	Peds	App. Total	Right	Thru	Left	Peds	App. Total	Int. Total
04:30 PM	0	0	0	0	0	0	0	0	0	0	0	0	0	0	0	0	0	0	0	0	0
04:45 PM	0	0	0	0	0	0	0	0	0	0	0	0	0	0	0	0	0	0	0	0	0
Total	0	0	0	0	0	0	0	0	0	0	0	0	0	0	0	0	0	0	0	0	0
05:00 PM	0	0	0	0	0	0	0	0	0	0	0	0	0	0	0	0	0	0	0	0	0
05:15 PM	0	0	0	0	0	0	0	0	0	0	0	0	0	0	0	0	0	0	0	0	0
05:30 PM	0	0	0	0	0	0	0	0	0	0	0	0	0	0	0	0	0	0	0	0	0
05:45 PM	0	0	0	0	0	0	0	0	0	0	0	0	0	0	0	0	0	0	0	0	0
Total	0	0	0	0	0	0	0	0	0	0	0	0	0	0	0	0	0	0	0	0	0
06:00 PM	0	0	0	0	0	0	0	0	0	0	0	0	0	0	0	0	0	0	0	0	0
06:15 PM	0	0	0	0	0	0	0	0	0	0	0	0	0	0	0	0	0	0	0	0	0
Grand Total	0	0	0	0	0	0	0	0	0	0	0	0	0	0	0	0	0	0	0	0	0
Apprch %	0	0	0	0		0	0	0	0		0	0	0	0		0	0	0	0		
Total %																					

	MATHILDA AVE Southbound					ROSS DR Westbound					MATHILDA AVE Northbound					ROSS DR Eastbound					
Start Time	Right	Thru	Left	Peds	App. Total	Right	Thru	Left	Peds	App. Total	Right	Thru	Left	Peds	App. Total	Right	Thru	Left	Peds	App. Total	Int. Total
Peak Hour Analysis From 04:30 PM to 06:15 PM - Peak 1 of 1																					
Peak Hour for Entire Intersection Begins at 04:30 PM																					
04:30 PM	0	0	0	0	0	0	0	0	0	0	0	0	0	0	0	0	0	0	0	0	0
04:45 PM	0	0	0	0	0	0	0	0	0	0	0	0	0	0	0	0	0	0	0	0	0
05:00 PM	0	0	0	0	0	0	0	0	0	0	0	0	0	0	0	0	0	0	0	0	0
05:15 PM	0	0	0	0	0	0	0	0	0	0	0	0	0	0	0	0	0	0	0	0	0
Total Volume	0	0	0	0	0	0	0	0	0	0	0	0	0	0	0	0	0	0	0	0	0
% App. Total	0	0	0	0		0	0	0	0		0	0	0	0		0	0	0	0		
PHF	.000	.000	.000	.000	.000	.000	.000	.000	.000	.000	.000	.000	.000	.000	.000	.000	.000	.000	.000	.000	.000

Traffic Data Service

Campbell, CA
(408) 377-2988
tdsbay@cs.com

File Name : 8PM FINAL
Site Code : 00000008
Start Date : 2/12/2013
Page No : 2

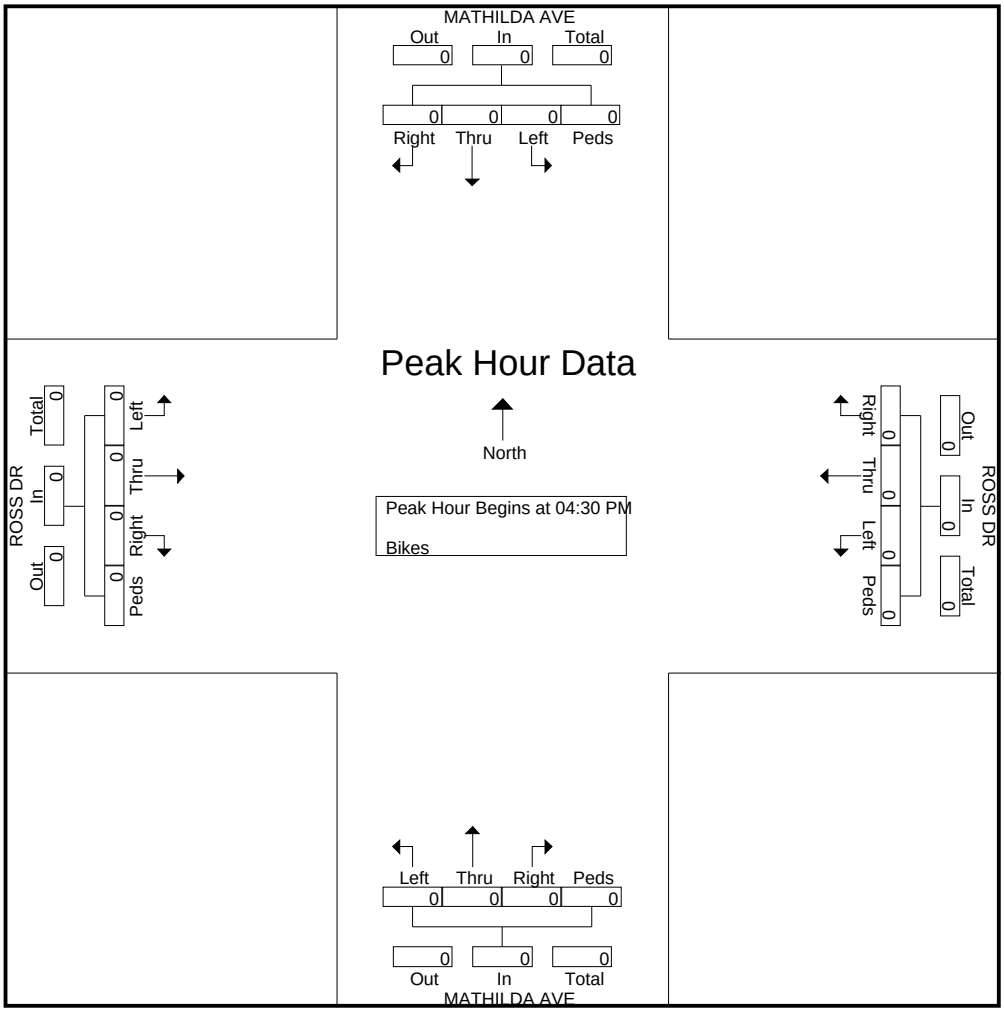

Traffic Data Service

Campbell, CA
(408) 377-2988
tdsbay@cs.com

File Name : 9AM FINAL
Site Code : 00000009
Start Date : 2/13/2013
Page No : 1

Groups Printed- Vehicles

	MATHILDA AVE Southbound					AHWANEE AVE Westbound					MATHILDA AVE Northbound					ALMANOR AVE Eastbound					
Start Time	Right	Thru	Left	Peds	App. Total	Right	Thru	Left	Peds	App. Total	Right	Thru	Left	Peds	App. Total	Right	Thru	Left	Peds	App. Total	Int. Total
07:00 AM	26	203	33	0	262	34	4	12	0	50	10	221	12	4	247	5	2	11	0	18	577
07:15 AM	26	263	30	0	319	18	3	16	1	38	11	325	6	0	342	3	2	10	0	15	714
07:30 AM	31	265	37	0	333	44	4	14	1	63	13	371	10	2	396	4	0	13	0	17	809
07:45 AM	53	331	40	0	424	49	3	19	1	72	12	346	13	2	373	4	2	19	0	25	894
Total	136	1062	140	0	1338	145	14	61	3	223	46	1263	41	8	1358	16	6	53	0	75	2994
08:00 AM	43	305	17	0	365	30	6	17	2	55	14	468	25	5	512	5	3	20	0	28	960
08:15 AM	45	264	29	0	338	24	9	18	1	52	8	518	22	4	552	5	5	18	0	28	970
08:30 AM	74	276	33	0	383	45	8	18	3	74	13	579	31	5	628	7	2	12	1	22	1107
08:45 AM	64	377	38	0	479	39	4	17	0	60	11	503	29	18	561	4	1	11	1	17	1117
Total	226	1222	117	0	1565	138	27	70	6	241	46	2068	107	32	2253	21	11	61	2	95	4154
Grand Total	362	2284	257	0	2903	283	41	131	9	464	92	3331	148	40	3611	37	17	114	2	170	7148
Apprch %	12.5	78.7	8.9	0		61	8.8	28.2	1.9		2.5	92.2	4.1	1.1		21.8	10	67.1	1.2		
Total %	5.1	32	3.6	0	40.6	4	0.6	1.8	0.1	6.5	1.3	46.6	2.1	0.6	50.5	0.5	0.2	1.6	0	2.4	

	MATHILDA AVE Southbound					AHWANEE AVE Westbound					MATHILDA AVE Northbound					ALMANOR AVE Eastbound					
Start Time	Right	Thru	Left	Peds	App. Total	Right	Thru	Left	Peds	App. Total	Right	Thru	Left	Peds	App. Total	Right	Thru	Left	Peds	App. Total	Int. Total
Peak Hour Analysis From 07:00 AM to 08:45 AM - Peak 1 of 1																					
Peak Hour for Entire Intersection Begins at 08:00 AM																					
08:00 AM	43	305	17	0	365	30	6	17	2	55	**14**	468	25	5	512	5	3	**20**	0	**28**	960
08:15 AM	45	264	29	0	338	24	**9**	**18**	1	52	8	518	22	4	552	5	**5**	18	0	28	970
08:30 AM	**74**	276	33	0	383	**45**	8	18	**3**	**74**	13	**579**	**31**	5	**628**	**7**	2	12	**1**	22	1107
08:45 AM	64	**377**	**38**	0	**479**	39	4	17	0	60	11	503	29	**18**	561	4	1	11	1	17	**1117**
Total Volume	226	1222	117	0	1565	138	27	70	6	241	46	2068	107	32	2253	21	11	61	2	95	4154
% App. Total	14.4	78.1	7.5	0		57.3	11.2	29	2.5		2	91.8	4.7	1.4		22.1	11.6	64.2	2.1		
PHF	.764	.810	.770	.000	.817	.767	.750	.972	.500	.814	.821	.893	.863	.444	.897	.750	.550	.763	.500	.848	.930

Traffic Data Service

Campbell, CA
(408) 377-2988
tdsbay@cs.com

File Name : 9AM FINAL
Site Code : 00000009
Start Date : 2/13/2013
Page No : 2

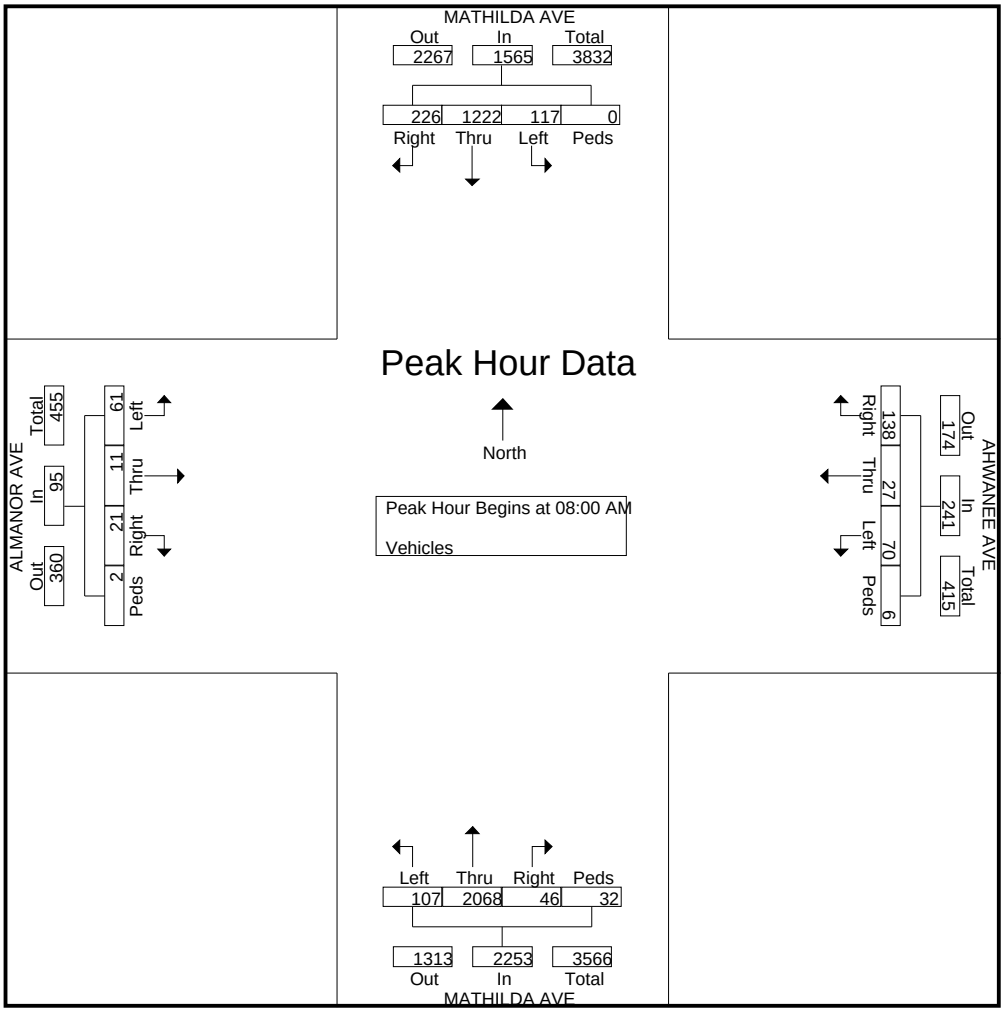

Traffic Data Service

Campbell, CA
(408) 377-2988
tdsbay@cs.com

File Name : 9AM FINAL
Site Code : 00000009
Start Date : 2/13/2013
Page No : 1

Groups Printed- Bikes

	MATHILDA AVE Southbound					AHWANEE AVE Westbound					MATHILDA AVE Northbound					ALMANOR AVE Eastbound					
Start Time	Right	Thru	Left	Peds	App. Total	Right	Thru	Left	Peds	App. Total	Right	Thru	Left	Peds	App. Total	Right	Thru	Left	Peds	App. Total	Int. Total
07:00 AM	0	0	0	0	0	0	0	0	0	0	0	0	0	0	0	0	0	0	0	0	0
07:15 AM	0	0	0	0	0	0	0	0	0	0	0	2	0	0	2	0	0	0	0	0	2
07:30 AM	0	1	0	0	1	0	1	0	0	1	0	1	0	0	1	0	0	0	0	0	3
07:45 AM	0	0	0	0	0	0	2	0	0	2	0	1	0	0	1	0	1	0	0	1	4
Total	0	1	0	0	1	0	3	0	0	3	0	4	0	0	4	0	1	0	0	1	9
08:00 AM	0	0	0	0	0	0	0	0	0	0	0	0	0	0	0	0	0	0	0	0	0
08:15 AM	0	0	0	0	0	0	0	0	0	0	0	1	0	0	1	0	0	0	0	0	1
08:30 AM	0	0	0	0	0	0	1	0	0	1	0	2	0	0	2	0	0	0	0	0	3
08:45 AM	0	0	0	0	0	0	0	0	0	0	0	0	0	0	0	0	0	0	0	0	0
Total	0	0	0	0	0	0	1	0	0	1	0	3	0	0	3	0	0	0	0	0	4
Grand Total	0	1	0	0	1	0	4	0	0	4	0	7	0	0	7	0	1	0	0	1	13
Apprch %	0	100	0	0		0	100	0	0		0	100	0	0		0	100	0	0		
Total %	0	7.7	0	0	7.7	0	30.8	0	0	30.8	0	53.8	0	0	53.8	0	7.7	0	0	7.7	

	MATHILDA AVE Southbound					AHWANEE AVE Westbound					MATHILDA AVE Northbound					ALMANOR AVE Eastbound					
Start Time	Right	Thru	Left	Peds	App. Total	Right	Thru	Left	Peds	App. Total	Right	Thru	Left	Peds	App. Total	Right	Thru	Left	Peds	App. Total	Int. Total
Peak Hour Analysis From 07:00 AM to 08:45 AM - Peak 1 of 1																					
Peak Hour for Entire Intersection Begins at 07:00 AM																					
07:00 AM	0	0	0	0	0	0	0	0	0	0	0	0	0	0	0	0	0	0	0	0	0
07:15 AM	0	0	0	0	0	0	0	0	0	0	0	**2**	0	0	**2**	0	0	0	0	0	2
07:30 AM	0	**1**	0	0	**1**	0	1	0	0	1	0	1	0	0	1	0	0	0	0	0	3
07:45 AM	0	0	0	0	0	0	**2**	0	0	**2**	0	1	0	0	1	0	**1**	0	0	**1**	**4**
Total Volume	0	1	0	0	1	0	3	0	0	3	0	4	0	0	4	0	1	0	0	1	9
% App. Total	0	100	0	0		0	100	0	0		0	100	0	0		0	100	0	0		
PHF	.000	.250	.000	.000	.250	.000	.375	.000	.000	.375	.000	.500	.000	.000	.500	.000	.250	.000	.000	.250	.563

Traffic Data Service

Campbell, CA
(408) 377-2988
tdsbay@cs.com

File Name : 9AM FINAL
Site Code : 00000009
Start Date : 2/13/2013
Page No : 2

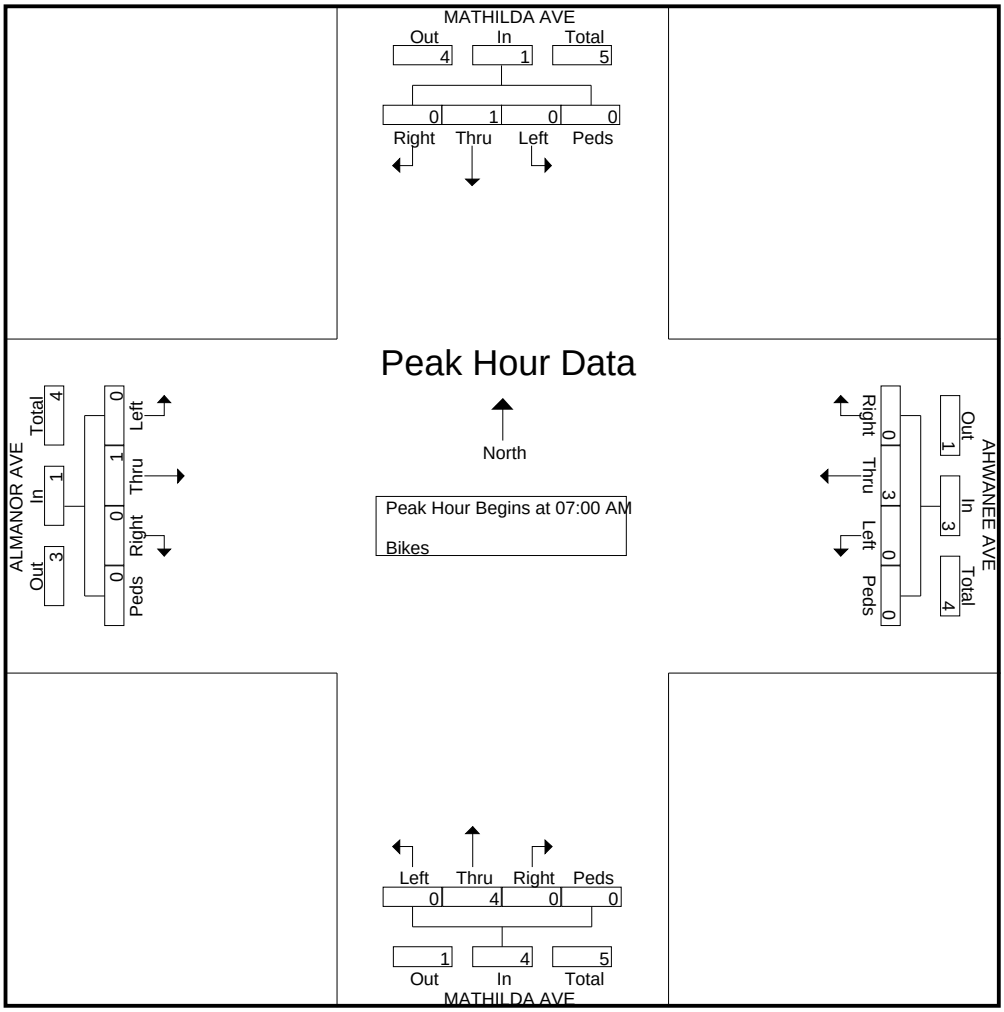

Traffic Data Service

Campbell, CA
(408) 377-2988
tdsbay@cs.com

File Name : 9PM FINAL
Site Code : 00000009
Start Date : 2/13/2013
Page No : 1

Groups Printed- Vehicles

	MATHILDA AVE Southbound					AHWANEE AVE Westbound					MATHILDA AVE Northbound					ALMANOR AVE Eastbound					
Start Time	Right	Thru	Left	Peds	App. Total	Right	Thru	Left	Peds	App. Total	Right	Thru	Left	Peds	App. Total	Right	Thru	Left	Peds	App. Total	Int. Total
04:30 PM	11	455	19	0	485	21	1	8	0	30	3	273	9	0	285	12	10	44	0	66	866
04:45 PM	10	461	46	0	517	34	2	12	0	48	8	221	11	4	244	15	5	57	0	77	886
Total	21	916	65	0	1002	55	3	20	0	78	11	494	20	4	529	27	15	101	0	143	1752
05:00 PM	14	541	25	0	580	48	1	11	0	60	11	278	11	2	302	15	7	64	0	86	1028
05:15 PM	16	633	53	0	702	43	2	11	0	56	8	282	14	3	307	16	2	58	0	76	1141
05:30 PM	15	786	37	0	838	32	0	4	1	37	7	264	17	1	289	12	7	53	0	72	1236
05:45 PM	12	805	36	0	853	31	2	15	0	48	10	308	14	4	336	21	7	79	0	107	1344
Total	57	2765	151	0	2973	154	5	41	1	201	36	1132	56	10	1234	64	23	254	0	341	4749
06:00 PM	31	745	35	0	811	26	2	9	0	37	13	336	1	0	350	14	16	77	0	107	1305
06:15 PM	27	658	47	0	732	22	2	8	1	33	6	297	7	0	310	31	19	94	0	144	1219
Grand Total	136	5084	298	0	5518	257	12	78	2	349	66	2259	84	14	2423	136	73	526	0	735	9025
Apprch %	2.5	92.1	5.4	0		73.6	3.4	22.3	0.6		2.7	93.2	3.5	0.6		18.5	9.9	71.6	0		
Total %	1.5	56.3	3.3	0	61.1	2.8	0.1	0.9	0	3.9	0.7	25	0.9	0.2	26.8	1.5	0.8	5.8	0	8.1	

	MATHILDA AVE Southbound					AHWANEE AVE Westbound					MATHILDA AVE Northbound					ALMANOR AVE Eastbound					
Start Time	Right	Thru	Left	Peds	App. Total	Right	Thru	Left	Peds	App. Total	Right	Thru	Left	Peds	App. Total	Right	Thru	Left	Peds	App. Total	Int. Total
Peak Hour Analysis From 04:30 PM to 06:15 PM - Peak 1 of 1																					
Peak Hour for Entire Intersection Begins at 05:30 PM																					
05:30 PM	15	786	37	0	838	**32**	0	4	**1**	37	7	264	**17**	1	289	12	7	53	0	72	1236
05:45 PM	12	**805**	36	0	**853**	31	**2**	**15**	0	**48**	10	308	14	**4**	336	21	7	79	0	107	**1344**
06:00 PM	**31**	745	35	0	811	26	2	9	0	37	**13**	**336**	1	0	**350**	14	16	77	0	107	1305
06:15 PM	27	658	**47**	0	732	22	2	8	1	33	6	297	7	0	310	**31**	**19**	**94**	0	**144**	1219
Total Volume	85	2994	155	0	3234	111	6	36	2	155	36	1205	39	5	1285	78	49	303	0	430	5104
% App. Total	2.6	92.6	4.8	0		71.6	3.9	23.2	1.3		2.8	93.8	3	0.4		18.1	11.4	70.5	0		
PHF	.685	.930	.824	.000	.948	.867	.750	.600	.500	.807	.692	.897	.574	.313	.918	.629	.645	.806	.000	.747	.949

Traffic Data Service

Campbell, CA
(408) 377-2988
tdsbay@cs.com

File Name : 9PM FINAL
Site Code : 00000009
Start Date : 2/13/2013
Page No : 2

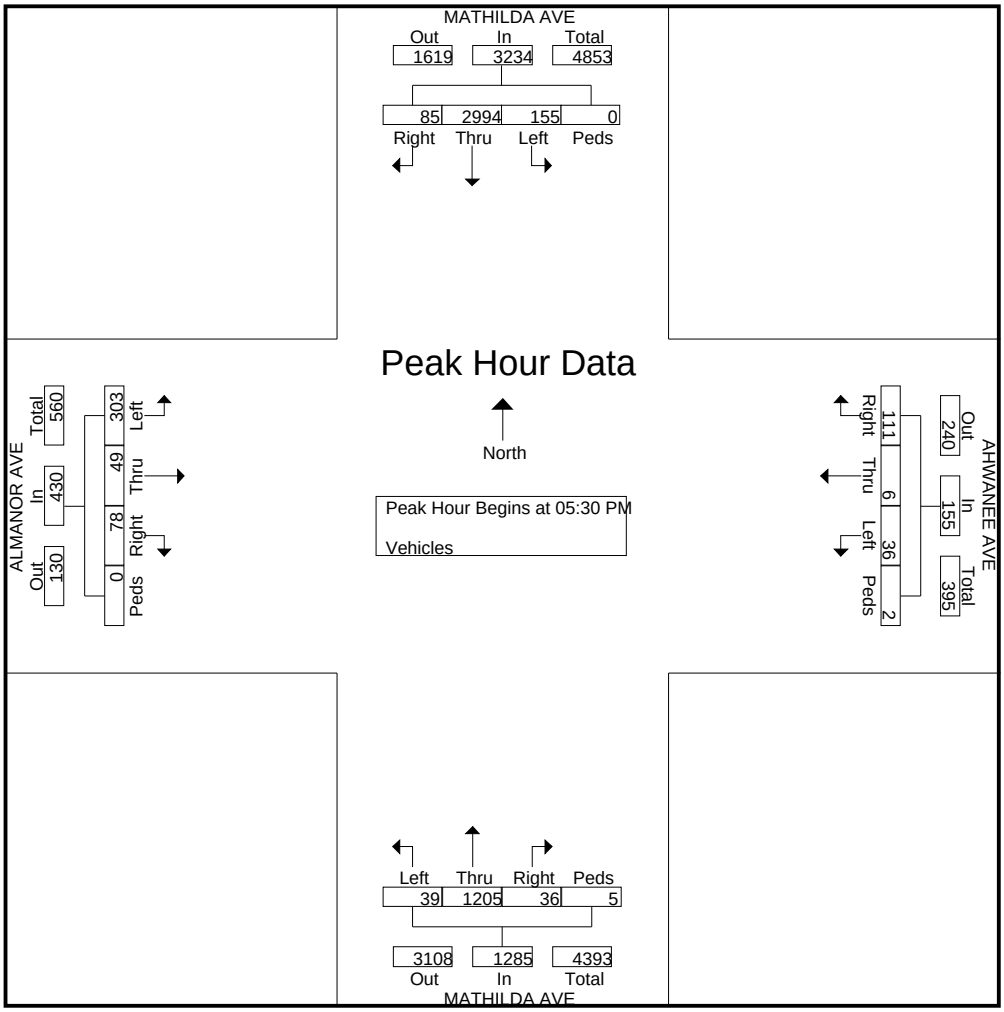

Traffic Data Service

Campbell, CA
(408) 377-2988
tdsbay@cs.com

File Name : 9PM FINAL
Site Code : 00000009
Start Date : 2/13/2013
Page No : 1

Groups Printed- Bikes

	MATHILDA AVE Southbound					AHWANEE AVE Westbound					MATHILDA AVE Northbound					ALMANOR AVE Eastbound					
Start Time	Right	Thru	Left	Peds	App. Total	Right	Thru	Left	Peds	App. Total	Right	Thru	Left	Peds	App. Total	Right	Thru	Left	Peds	App. Total	Int. Total
04:30 PM	0	0	0	0	0	0	0	0	0	0	0	0	0	0	0	0	0	0	0	0	0
04:45 PM	0	1	0	0	1	0	1	0	0	1	0	0	0	0	0	0	0	0	0	0	2
Total	0	1	0	0	1	0	1	0	0	1	0	0	0	0	0	0	0	0	0	0	2
05:00 PM	0	1	0	0	1	0	0	0	0	0	0	0	0	0	0	0	0	0	0	0	1
05:15 PM	0	1	0	0	1	0	1	0	0	1	0	0	0	0	0	0	1	0	0	1	3
05:30 PM	0	0	0	0	0	0	0	0	0	0	0	0	0	0	0	0	0	0	0	0	0
05:45 PM	0	0	0	0	0	0	0	0	0	0	0	0	0	0	0	0	1	0	0	1	1
Total	0	2	0	0	2	0	1	0	0	1	0	0	0	0	0	0	2	0	0	2	5
06:00 PM	0	0	0	0	0	0	0	0	0	0	0	0	0	0	0	0	1	0	0	1	1
06:15 PM	0	0	0	0	0	0	0	0	0	0	0	0	0	0	0	0	0	0	0	0	0
Grand Total	0	3	0	0	3	0	2	0	0	2	0	0	0	0	0	0	3	0	0	3	8
Apprch %	0	100	0	0		0	100	0	0		0	0	0	0		0	100	0	0		
Total %	0	37.5	0	0	37.5	0	25	0	0	25	0	0	0	0	0	0	37.5	0	0	37.5	

	MATHILDA AVE Southbound					AHWANEE AVE Westbound					MATHILDA AVE Northbound					ALMANOR AVE Eastbound					
Start Time	Right	Thru	Left	Peds	App. Total	Right	Thru	Left	Peds	App. Total	Right	Thru	Left	Peds	App. Total	Right	Thru	Left	Peds	App. Total	Int. Total
Peak Hour Analysis From 04:30 PM to 06:15 PM - Peak 1 of 1																					
Peak Hour for Entire Intersection Begins at 04:30 PM																					
04:30 PM	0	0	0	0	0	0	0	0	0	0	0	0	0	0	0	0	0	0	0	0	0
04:45 PM	0	**1**	0	0	**1**	0	**1**	0	0	**1**	0	0	0	0	0	0	0	0	0	0	2
05:00 PM	0	1	0	0	1	0	0	0	0	0	0	0	0	0	0	0	0	0	0	0	1
05:15 PM	0	1	0	0	1	0	1	0	0	1	0	0	0	0	0	0	**1**	0	0	**1**	**3**
Total Volume	0	3	0	0	3	0	2	0	0	2	0	0	0	0	0	0	1	0	0	1	6
% App. Total	0	100	0	0		0	100	0	0		0	0	0	0		0	100	0	0		
PHF	.000	.750	.000	.000	.750	.000	.500	.000	.000	.500	.000	.000	.000	.000	.000	.000	.250	.000	.000	.250	.500

Traffic Data Service

Campbell, CA
(408) 377-2988
tdsbay@cs.com

File Name : 9PM FINAL
Site Code : 00000009
Start Date : 2/13/2013
Page No : 2

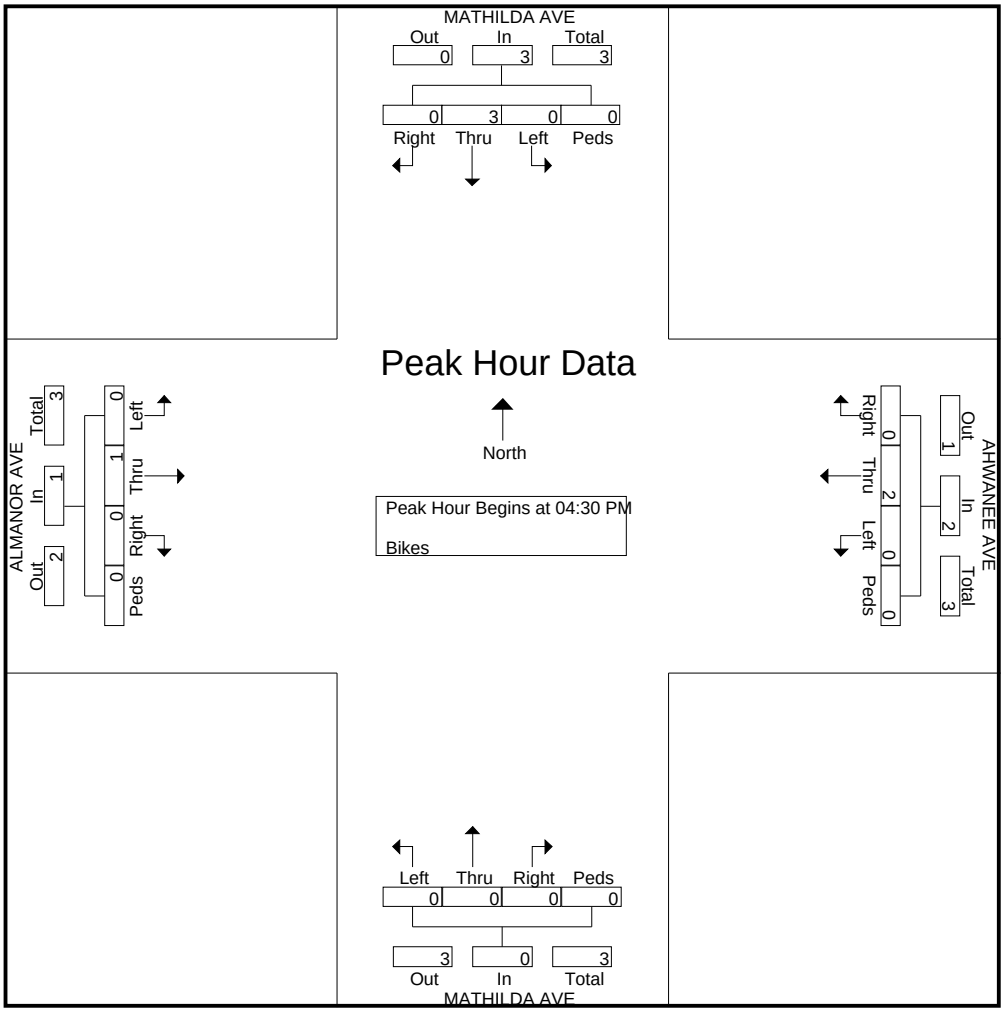

Traffic Data Service

Campbell, CA
(408) 377-2988
tdsbay@cs.com

File Name : 17PM FINAL
Site Code : 00000017
Start Date : 2/12/2013
Page No : 1

Groups Printed- Bikes

	CARIBBEAN DR Southbound					TWIN CREEKS ENTRANCE Westbound					CARIBBEAN DR Northbound					DRIVEWAY Eastbound					
Start Time	Right	Thru	Left	Peds	App. Total	Right	Thru	Left	Peds	App. Total	Right	Thru	Left	Peds	App. Total	Right	Thru	Left	Peds	App. Total	Int. Total
04:30 PM	0	0	0	0	0	0	0	0	0	0	0	0	0	0	0	0	0	0	0	0	0
04:45 PM	0	3	0	0	3	0	0	0	0	0	0	0	0	0	0	0	0	0	0	0	3
Total	0	3	0	0	3	0	0	0	0	0	0	0	0	0	0	0	0	0	0	0	3
05:00 PM	0	0	1	0	1	0	0	0	0	0	0	0	0	0	0	0	0	0	0	0	1
05:15 PM	0	1	0	0	1	0	0	0	0	0	0	1	0	0	1	0	0	0	0	0	2
05:30 PM	0	0	0	0	0	0	0	0	0	0	0	1	0	0	1	0	0	0	0	0	1
05:45 PM	0	3	0	0	3	0	0	0	0	0	0	1	0	0	1	0	0	0	0	0	4
Total	0	4	1	0	5	0	0	0	0	0	0	3	0	0	3	0	0	0	0	0	8
06:00 PM	0	1	0	0	1	0	0	0	0	0	0	0	0	0	0	0	0	0	0	0	1
06:15 PM	0	0	0	0	0	0	0	0	0	0	0	1	0	0	1	0	0	0	0	0	1
Grand Total	0	8	1	0	9	0	0	0	0	0	0	4	0	0	4	0	0	0	0	0	13
Apprch %	0	88.9	11.1	0		0	0	0	0		0	100	0	0		0	0	0	0		
Total %	0	61.5	7.7	0	69.2	0	0	0	0	0	0	30.8	0	0	30.8	0	0	0	0	0	

	CARIBBEAN DR Southbound					TWIN CREEKS ENTRANCE Westbound					CARIBBEAN DR Northbound					DRIVEWAY Eastbound					
Start Time	Right	Thru	Left	Peds	App. Total	Right	Thru	Left	Peds	App. Total	Right	Thru	Left	Peds	App. Total	Right	Thru	Left	Peds	App. Total	Int. Total
Peak Hour Analysis From 04:30 PM to 06:15 PM - Peak 1 of 1																					
Peak Hour for Entire Intersection Begins at 05:00 PM																					
05:00 PM	0	0	**1**	0	1	0	0	0	0	0	0	0	0	0	0	0	0	0	0	0	1
05:15 PM	0	1	0	0	1	0	0	0	0	0	0	**1**	0	0	**1**	0	0	0	0	0	2
05:30 PM	0	0	0	0	0	0	0	0	0	0	0	1	0	0	1	0	0	0	0	0	1
05:45 PM	0	**3**	0	0	**3**	0	0	0	0	0	0	1	0	0	1	0	0	0	0	0	**4**
Total Volume	0	4	1	0	5	0	0	0	0	0	0	3	0	0	3	0	0	0	0	0	8
% App. Total	0	80	20	0		0	0	0	0		0	100	0	0		0	0	0	0		
PHF	.000	.333	.250	.000	.417	.000	.000	.000	.000	.000	.000	.750	.000	.000	.750	.000	.000	.000	.000	.000	.500

Traffic Data Service

Campbell, CA
(408) 377-2988
tdsbay@cs.com

File Name : 17PM FINAL
Site Code : 00000017
Start Date : 2/12/2013
Page No : 2

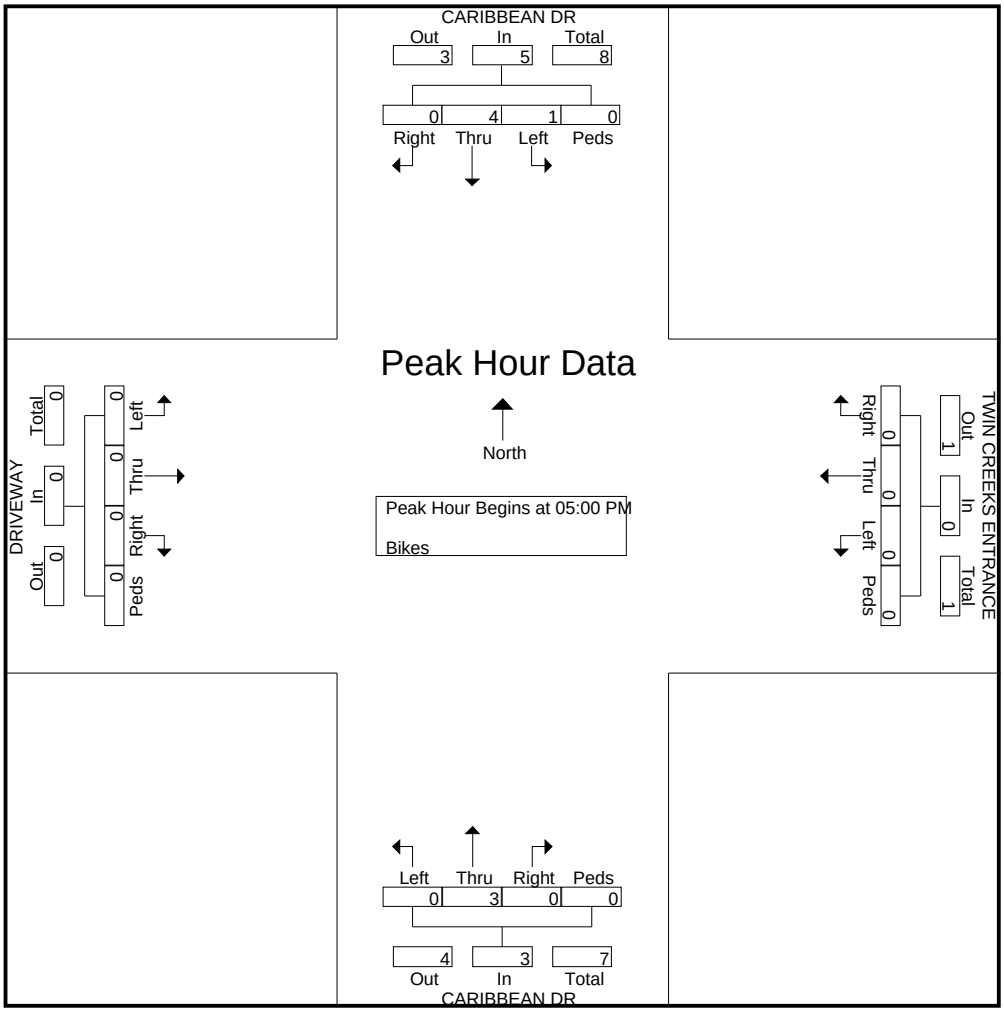

Traffic Data Service

Campbell, CA
(408) 377-2988
tdsbay@cs.com

File Name : 17PM FINAL
Site Code : 00000017
Start Date : 2/12/2013
Page No : 1

Groups Printed- Vehicles

	CARIBBEAN DR Southbound					TWIN CREEKS ENTRANCE Westbound					CARIBBEAN DR Northbound					DRIVEWAY Eastbound					
Start Time	Right	Thru	Left	Peds	App. Total	Right	Thru	Left	Peds	App. Total	Right	Thru	Left	Peds	App. Total	Right	Thru	Left	Peds	App. Total	Int. Total
04:30 PM	3	312	2	0	317	0	0	0	0	0	0	28	4	0	32	4	0	1	0	5	354
04:45 PM	1	298	2	0	301	0	0	1	0	1	0	40	5	0	45	11	0	1	0	12	359
Total	4	610	4	0	618	0	0	1	0	1	0	68	9	0	77	15	0	2	0	17	713
05:00 PM	1	393	2	0	396	1	0	2	0	3	0	33	2	0	35	10	0	0	0	10	444
05:15 PM	1	360	0	0	361	0	0	0	0	0	0	41	2	0	43	12	0	0	0	12	416
05:30 PM	0	298	0	0	298	1	0	2	0	3	0	47	5	1	53	10	0	0	0	10	364
05:45 PM	2	296	0	0	298	0	0	1	0	1	1	46	2	0	49	6	0	0	0	6	354
Total	4	1347	2	0	1353	2	0	5	0	7	1	167	11	1	180	38	0	0	0	38	1578
06:00 PM	4	269	1	0	274	0	0	1	0	1	2	43	4	0	49	4	0	1	1	6	330
06:15 PM	0	237	0	0	237	0	0	0	0	0	1	26	3	0	30	5	0	0	0	5	272
Grand Total	12	2463	7	0	2482	2	0	7	0	9	4	304	27	1	336	62	0	3	1	66	2893
Apprch %	0.5	99.2	0.3	0		22.2	0	77.8	0		1.2	90.5	8	0.3		93.9	0	4.5	1.5		
Total %	0.4	85.1	0.2	0	85.8	0.1	0	0.2	0	0.3	0.1	10.5	0.9	0	11.6	2.1	0	0.1	0	2.3	

	CARIBBEAN DR Southbound					TWIN CREEKS ENTRANCE Westbound					CARIBBEAN DR Northbound					DRIVEWAY Eastbound					
Start Time	Right	Thru	Left	Peds	App. Total	Right	Thru	Left	Peds	App. Total	Right	Thru	Left	Peds	App. Total	Right	Thru	Left	Peds	App. Total	Int. Total
Peak Hour Analysis From 04:30 PM to 06:15 PM - Peak 1 of 1																					
Peak Hour for Entire Intersection Begins at 04:45 PM																					
04:45 PM	**1**	298	**2**	0	301	0	0	1	0	1	0	40	**5**	0	45	11	0	**1**	0	**12**	359
05:00 PM	1	**393**	2	0	**396**	**1**	0	**2**	0	**3**	0	33	2	0	35	10	0	0	0	10	**444**
05:15 PM	1	360	0	0	361	0	0	0	0	0	0	41	2	0	43	**12**	0	0	0	12	416
05:30 PM	0	298	0	0	298	1	0	2	0	3	0	**47**	5	**1**	**53**	10	0	0	0	10	364
Total Volume	3	1349	4	0	1356	2	0	5	0	7	0	161	14	1	176	43	0	1	0	44	1583
% App. Total																					
PHF	.750	.858	.500	.000	.856	.500	.000	.625	.000	.583	.000	.856	.700	.250	.830	.896	.000	.250	.000	.917	.891

Traffic Data Service

Campbell, CA

(408) 377-2988

tdsbay@cs.com

File Name : 17PM FINAL
Site Code : 00000017
Start Date : 2/12/2013
Page No : 2

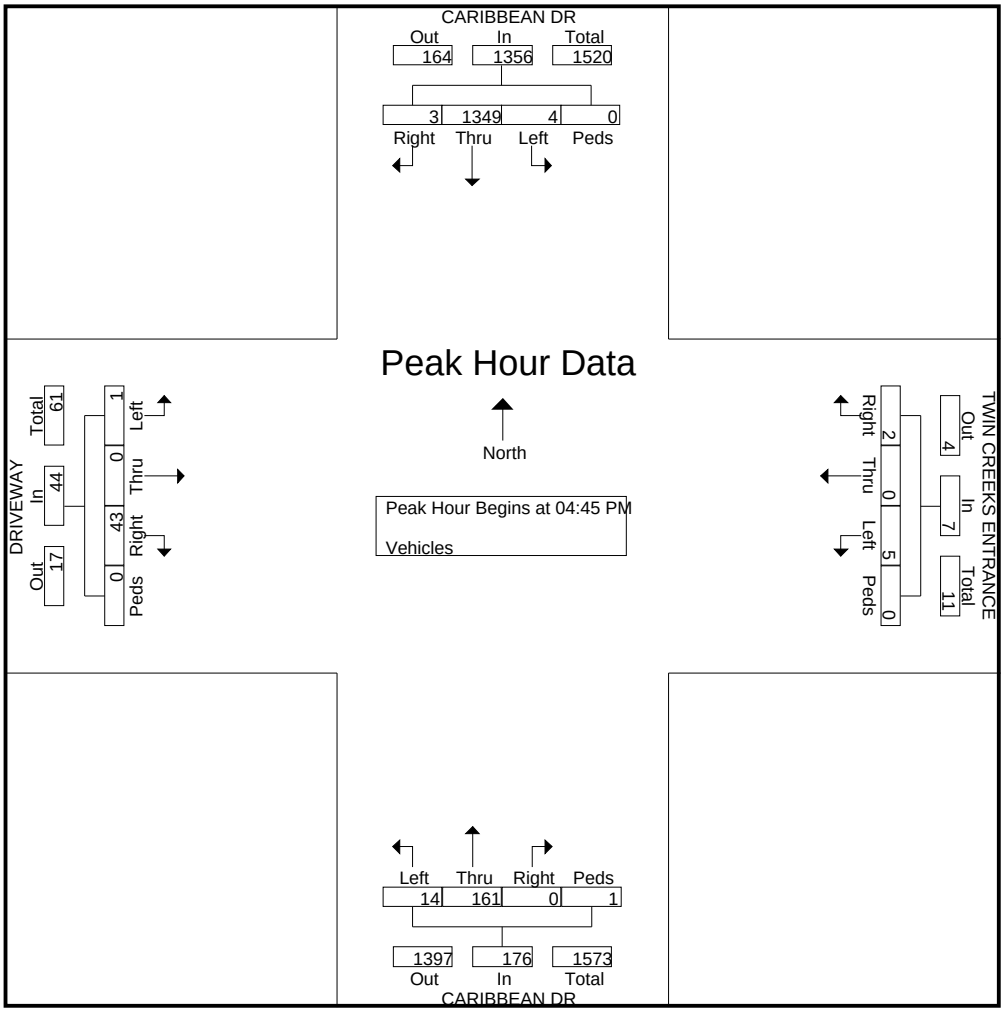

Traffic Data Service

Campbell, CA
(408) 377-2988
tdsbay@cs.com

File Name : 17AM FINAL
Site Code : 00000017
Start Date : 2/12/2013
Page No : 1

Groups Printed- Bikes

	CARIBBEAN DR Southbound					TWIN CREEKS ENTRANCE Westbound					CARIBBEAN DR Northbound					DRIVEWAY Eastbound					
Start Time	Right	Thru	Left	Peds	App. Total	Right	Thru	Left	Peds	App. Total	Right	Thru	Left	Peds	App. Total	Right	Thru	Left	Peds	App. Total	Int. Total
07:00 AM	0	1	0	0	1	0	0	0	0	0	0	0	0	0	0	0	0	0	0	0	1
07:15 AM	0	0	0	0	0	0	0	0	0	0	0	2	1	0	3	0	0	0	0	0	3
07:30 AM	0	0	0	0	0	0	0	0	0	0	0	3	0	0	3	0	0	0	0	0	3
07:45 AM	0	0	0	0	0	0	0	0	0	0	0	1	0	0	1	0	0	0	0	0	1
Total	0	1	0	0	1	0	0	0	0	0	0	6	1	0	7	0	0	0	0	0	8
08:00 AM	0	0	0	0	0	0	0	0	0	0	0	0	0	0	0	0	0	0	0	0	0
08:15 AM	0	0	0	0	0	0	0	0	0	0	0	0	0	0	0	0	0	0	0	0	0
08:30 AM	0	0	0	0	0	0	0	0	0	0	0	2	0	0	2	0	0	0	0	0	2
08:45 AM	0	0	0	0	0	0	0	0	0	0	0	1	0	0	1	0	0	0	0	0	1
Total	0	0	0	0	0	0	0	0	0	0	0	3	0	0	3	0	0	0	0	0	3
Grand Total	0	1	0	0	1	0	0	0	0	0	0	9	1	0	10	0	0	0	0	0	11
Apprch %	0	100	0	0		0	0	0	0		0	90	10	0		0	0	0	0		
Total %	0	9.1	0	0	9.1	0	0	0	0	0	0	81.8	9.1	0	90.9	0	0	0	0	0	

	CARIBBEAN DR Southbound					TWIN CREEKS ENTRANCE Westbound					CARIBBEAN DR Northbound					DRIVEWAY Eastbound					
Start Time	Right	Thru	Left	Peds	App. Total	Right	Thru	Left	Peds	App. Total	Right	Thru	Left	Peds	App. Total	Right	Thru	Left	Peds	App. Total	Int. Total
Peak Hour Analysis From 07:00 AM to 08:45 AM - Peak 1 of 1																					
Peak Hour for Entire Intersection Begins at 07:00 AM																					
07:00 AM	0	**1**	0	0	**1**	0	0	0	0	0	0	0	0	0	0	0	0	0	0	0	1
07:15 AM	0	0	0	0	0	0	0	0	0	0	0	2	**1**	0	**3**	0	0	0	0	0	**3**
07:30 AM	0	0	0	0	0	0	0	0	0	0	0	**3**	0	0	3	0	0	0	0	0	3
07:45 AM	0	0	0	0	0	0	0	0	0	0	0	1	0	0	1	0	0	0	0	0	1
Total Volume	0	1	0	0	1	0	0	0	0	0	0	6	1	0	7	0	0	0	0	0	8
% App. Total	0	100	0	0		0	0	0	0		0	85.7	14.3	0		0	0	0	0		
PHF	.000	.250	.000	.000	.250	.000	.000	.000	.000	.000	.000	.500	.250	.000	.583	.000	.000	.000	.000	.000	.667

Traffic Data Service

Campbell, CA
(408) 377-2988
tdsbay@cs.com

File Name : 17AM FINAL
Site Code : 00000017
Start Date : 2/12/2013
Page No : 2

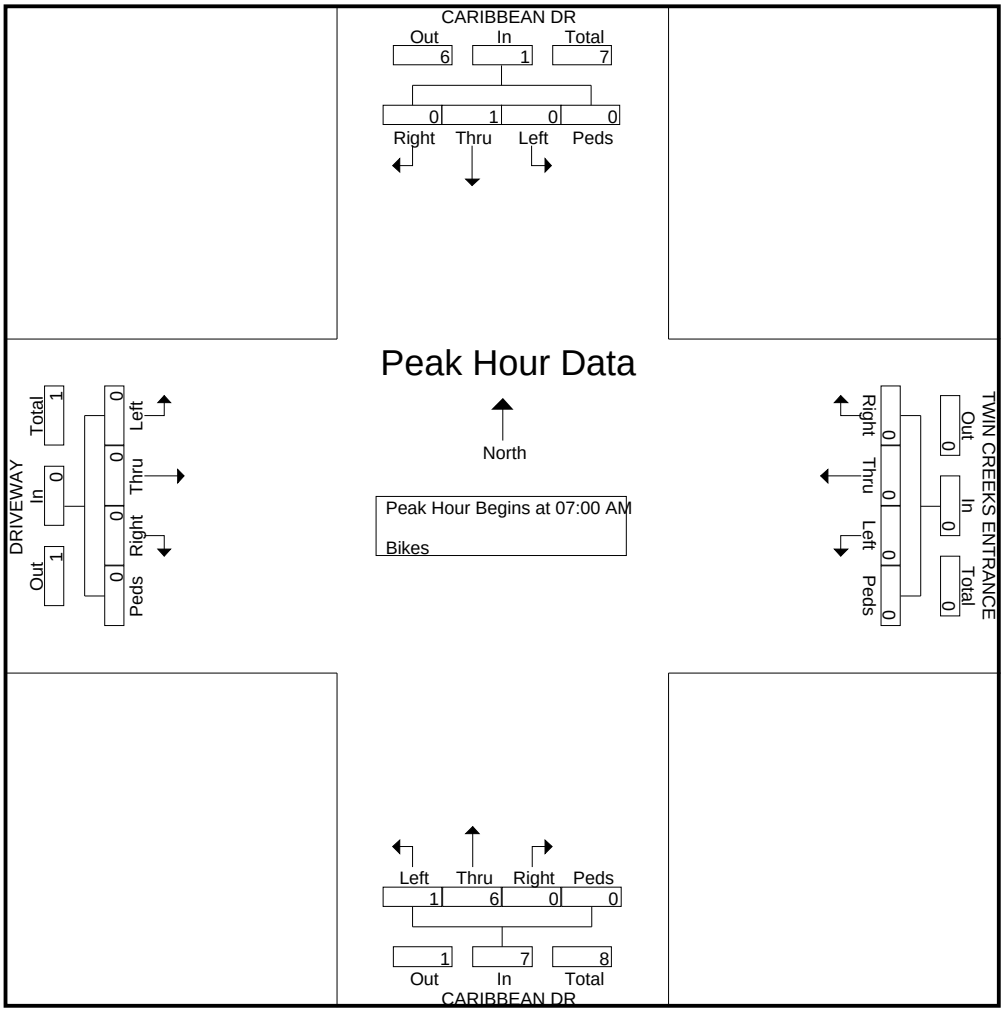

Traffic Data Service

Campbell, CA
(408) 377-2988
tdsbay@cs.com

File Name : 17AM FINAL
Site Code : 00000017
Start Date : 2/12/2013
Page No : 1

Groups Printed- Vehicles

	CARIBBEAN DR Southbound					TWIN CREEKS ENTRANCE Westbound					CARIBBEAN DR Northbound					DRIVEWAY Eastbound					
Start Time	Right	Thru	Left	Peds	App. Total	Right	Thru	Left	Peds	App. Total	Right	Thru	Left	Peds	App. Total	Right	Thru	Left	Peds	App. Total	Int. Total
07:00 AM	0	16	0	0	16	0	0	2	0	2	0	236	12	0	248	3	0	0	0	3	269
07:15 AM	0	17	2	0	19	0	0	0	0	0	2	270	7	0	279	1	0	0	0	1	299
07:30 AM	2	19	1	0	22	0	0	4	0	4	0	316	10	0	326	0	0	0	0	0	352
07:45 AM	4	19	1	0	24	0	0	1	0	1	0	319	18	0	337	5	1	0	0	6	368
Total	6	71	4	0	81	0	0	7	0	7	2	1141	47	0	1190	9	1	0	0	10	1288
08:00 AM	3	33	5	1	42	2	0	2	0	4	5	328	7	0	340	2	0	0	0	2	388
08:15 AM	1	37	1	0	39	1	1	1	0	3	1	349	12	0	362	0	0	0	0	0	404
08:30 AM	3	31	2	0	36	1	0	0	0	1	0	336	20	0	356	1	0	3	0	4	397
08:45 AM	1	42	0	1	44	0	0	0	0	0	0	430	20	0	450	0	0	0	0	0	494
Total	8	143	8	2	161	4	1	3	0	8	6	1443	59	0	1508	3	0	3	0	6	1683
Grand Total	14	214	12	2	242	4	1	10	0	15	8	2584	106	0	2698	12	1	3	0	16	2971
Apprch %	5.8	88.4	5	0.8		26.7	6.7	66.7	0		0.3	95.8	3.9	0		75	6.2	18.8	0		
Total %	0.5	7.2	0.4	0.1	8.1	0.1	0	0.3	0	0.5	0.3	87	3.6	0	90.8	0.4	0	0.1	0	0.5	

	CARIBBEAN DR Southbound					TWIN CREEKS ENTRANCE Westbound					CARIBBEAN DR Northbound					DRIVEWAY Eastbound					
Start Time	Right	Thru	Left	Peds	App. Total	Right	Thru	Left	Peds	App. Total	Right	Thru	Left	Peds	App. Total	Right	Thru	Left	Peds	App. Total	Int. Total
Peak Hour Analysis From 07:00 AM to 08:45 AM - Peak 1 of 1																					
Peak Hour for Entire Intersection Begins at 08:00 AM																					
08:00 AM	**3**	33	**5**	**1**	42	**2**	0	**2**	0	**4**	**5**	328	7	0	340	**2**	0	0	0	2	388
08:15 AM	1	37	1	0	39	1	**1**	1	0	3	1	349	12	0	362	0	0	0	0	0	404
08:30 AM	3	31	2	0	36	1	0	0	0	1	0	336	**20**	0	356	1	0	**3**	0	**4**	397
08:45 AM	1	**42**	0	1	**44**	0	0	0	0	0	0	**430**	20	0	**450**	0	0	0	0	0	**494**
Total Volume	8	143	8	2	161	4	1	3	0	8	6	1443	59	0	1508	3	0	3	0	6	1683
% App. Total																					
PHF	.667	.851	.400	.500	.915	.500	.250	.375	.000	.500	.300	.839	.738	.000	.838	.375	.000	.250	.000	.375	.852

Traffic Data Service

Campbell, CA

(408) 377-2988

tdsbay@cs.com

File Name : 17AM FINAL
Site Code : 00000017
Start Date : 2/12/2013
Page No : 2

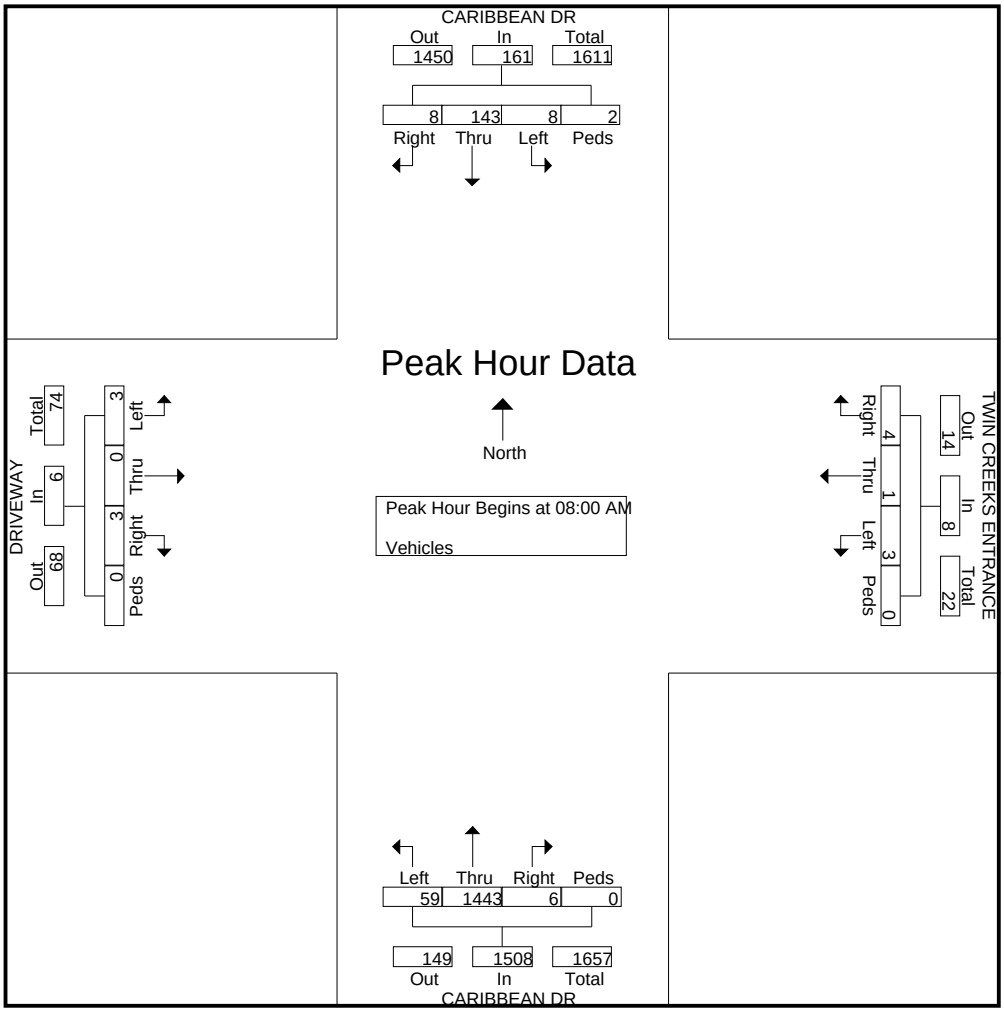

Traffic Data Service

Campbell, CA
(408) 377-2988
tdsbay@cs.com

File Name : 16PM FINAL
Site Code : 00000016
Start Date : 2/12/2013
Page No : 1

Groups Printed- Bikes

	FAIR OAKS AVE Southbound					Westbound					WOLFE RD Northbound					FAIR OAKS AVE Eastbound					
Start Time	Right	Thru	Left	Peds	App. Total	Right	Thru	Left	Peds	App. Total	Right	Thru	Left	Peds	App. Total	Right	Thru	Left	Peds	App. Total	Int. Total
04:30 PM	0	0	0	0	0	0	0	0	0	0	0	0	0	0	0	0	0	0	0	0	0
04:45 PM	0	0	0	0	0	0	0	0	0	0	0	1	0	0	1	0	0	0	0	0	1
Total	0	0	0	0	0	0	0	0	0	0	0	1	0	0	1	0	0	0	0	0	1
05:00 PM	0	1	0	0	1	0	0	0	0	0	0	1	0	0	1	0	0	1	0	1	3
05:15 PM	0	0	0	0	0	0	0	0	0	0	0	1	0	0	1	0	0	0	0	0	1
05:30 PM	0	0	0	0	0	0	0	0	0	0	0	2	0	0	2	0	0	0	0	0	2
05:45 PM	0	0	0	0	0	0	0	0	0	0	0	2	0	0	2	0	0	3	0	3	5
Total	0	1	0	0	1	0	0	0	0	0	0	6	0	0	6	0	0	4	0	4	11
06:00 PM	0	0	0	0	0	0	0	0	0	0	0	1	0	0	1	0	0	0	0	0	1
06:15 PM	0	0	0	0	0	0	0	0	0	0	0	1	0	0	1	0	0	0	0	0	1
Grand Total	0	1	0	0	1	0	0	0	0	0	0	9	0	0	9	0	0	4	0	4	14
Apprch %	0	100	0	0		0	0	0	0		0	100	0	0		0	0	100	0		
Total %	0	7.1	0	0	7.1	0	0	0	0	0	0	64.3	0	0	64.3	0	0	28.6	0	28.6	

	FAIR OAKS AVE Southbound					Westbound					WOLFE RD Northbound					FAIR OAKS AVE Eastbound					
Start Time	Right	Thru	Left	Peds	App. Total	Right	Thru	Left	Peds	App. Total	Right	Thru	Left	Peds	App. Total	Right	Thru	Left	Peds	App. Total	Int. Total
Peak Hour Analysis From 04:30 PM to 06:15 PM - Peak 1 of 1																					
Peak Hour for Entire Intersection Begins at 05:00 PM																					
05:00 PM	0	**1**	0	0	**1**	0	0	0	0	0	0	1	0	0	1	0	0	1	0	1	3
05:15 PM	0	0	0	0	0	0	0	0	0	0	0	1	0	0	1	0	0	0	0	0	1
05:30 PM	0	0	0	0	0	0	0	0	0	0	0	**2**	0	0	**2**	0	0	0	0	0	2
05:45 PM	0	0	0	0	0	0	0	0	0	0	0	2	0	0	2	0	0	**3**	0	**3**	**5**
Total Volume	0	1	0	0	1	0	0	0	0	0	0	6	0	0	6	0	0	4	0	4	11
% App. Total	0	100	0	0		0	0	0	0		0	100	0	0		0	0	100	0		
PHF	.000	.250	.000	.000	.250	.000	.000	.000	.000	.000	.000	.750	.000	.000	.750	.000	.000	.333	.000	.333	.550

Traffic Data Service

Campbell, CA

(408) 377-2988

tdsbay@cs.com

File Name : 16PM FINAL
Site Code : 00000016
Start Date : 2/12/2013
Page No : 2

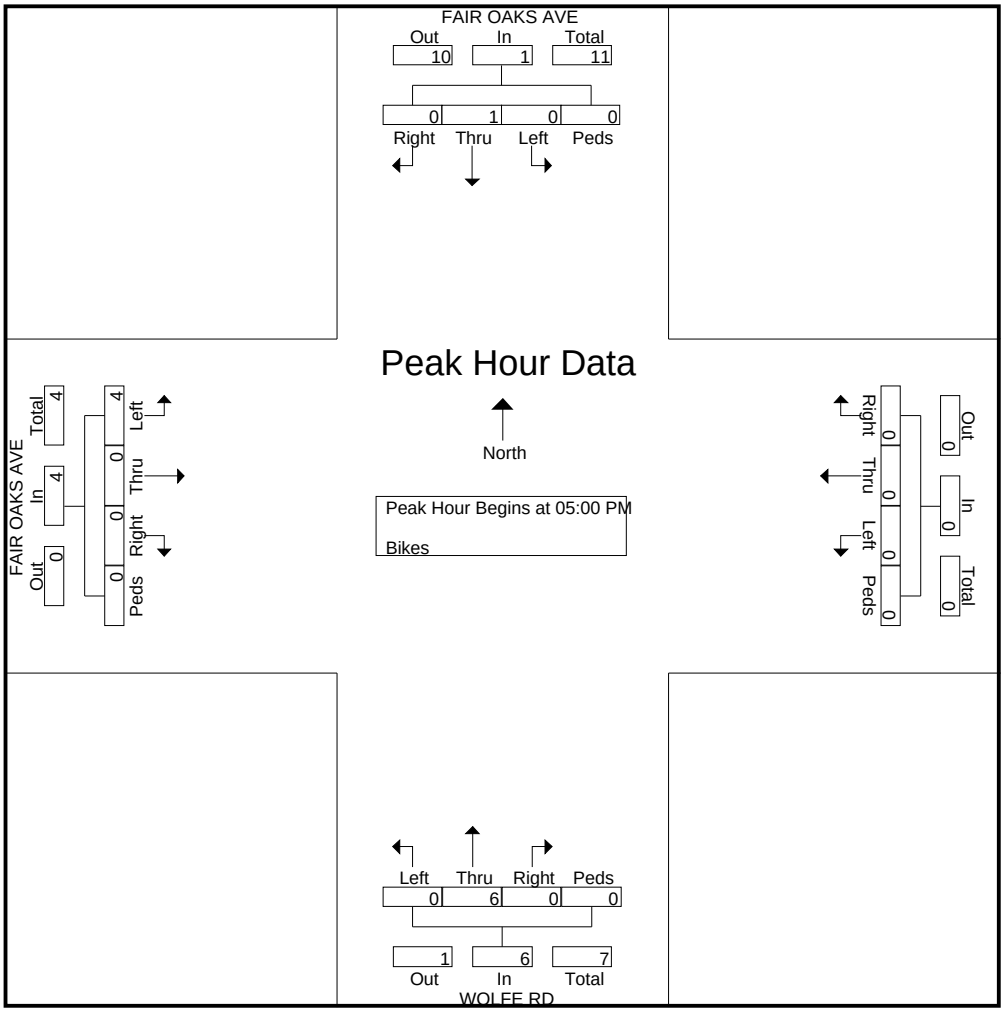

Traffic Data Service

Campbell, CA
(408) 377-2988
tdsbay@cs.com

File Name : 16PM FINAL
Site Code : 00000016
Start Date : 2/12/2013
Page No : 1

Groups Printed- Vehicles

	FAIR OAKS AVE Southbound					Westbound					WOLFE RD Northbound					FAIR OAKS AVE Eastbound					
Start Time	Right	Thru	Left	Peds	App. Total	Right	Thru	Left	Peds	App. Total	Right	Thru	Left	Peds	App. Total	Right	Thru	Left	Peds	App. Total	Int. Total
04:30 PM	174	158	0	0	332	0	0	0	0	0	0	84	0	3	87	2	0	148	0	150	569
04:45 PM	184	168	0	3	355	0	0	0	0	0	0	82	0	4	86	0	0	170	0	170	611
Total	358	326	0	3	687	0	0	0	0	0	0	166	0	7	173	2	0	318	0	320	1180
05:00 PM	234	208	0	0	442	0	0	0	0	0	0	80	0	5	85	1	0	162	0	163	690
05:15 PM	253	238	0	0	491	0	0	0	0	0	0	85	0	5	90	0	0	161	0	161	742
05:30 PM	343	286	0	0	629	0	0	0	0	0	0	98	0	6	104	3	0	193	0	196	929
05:45 PM	333	263	0	0	596	0	0	0	0	0	0	102	0	2	104	1	0	209	0	210	910
Total	1163	995	0	0	2158	0	0	0	0	0	0	365	0	18	383	5	0	725	0	730	3271
06:00 PM	345	283	0	0	628	0	0	0	0	0	0	100	0	3	103	0	0	169	0	169	900
06:15 PM	312	233	0	0	545	0	0	0	0	0	0	108	0	5	113	2	0	180	0	182	840
Grand Total	2178	1837	0	3	4018	0	0	0	0	0	0	739	0	33	772	9	0	1392	0	1401	6191
Apprch %	54.2	45.7	0	0.1		0	0	0	0		0	95.7	0	4.3		0.6	0	99.4	0		
Total %	35.2	29.7	0	0	64.9	0	0	0	0	0	0	11.9	0	0.5	12.5	0.1	0	22.5	0	22.6	

	FAIR OAKS AVE Southbound					Westbound					WOLFE RD Northbound					FAIR OAKS AVE Eastbound					
Start Time	Right	Thru	Left	Peds	App. Total	Right	Thru	Left	Peds	App. Total	Right	Thru	Left	Peds	App. Total	Right	Thru	Left	Peds	App. Total	Int. Total
Peak Hour Analysis From 04:30 PM to 06:15 PM - Peak 1 of 1																					
Peak Hour for Entire Intersection Begins at 05:30 PM																					
05:30 PM	343	**286**	0	0	**629**	0	0	0	0	0	0	98	0	**6**	104	**3**	0	193	0	196	**929**
05:45 PM	333	263	0	0	596	0	0	0	0	0	0	102	0	2	104	1	0	**209**	0	**210**	910
06:00 PM	**345**	283	0	0	628	0	0	0	0	0	0	100	0	3	103	0	0	169	0	169	900
06:15 PM	312	233	0	0	545	0	0	0	0	0	0	**108**	0	5	**113**	2	0	180	0	182	840
Total Volume	1333	1065	0	0	2398	0	0	0	0	0	0	408	0	16	424	6	0	751	0	757	3579
% App. Total																					
PHF	.966	.931	.000	.000	.953	.000	.000	.000	.000	.000	.000	.944	.000	.667	.938	.500	.000	.898	.000	.901	.963

Traffic Data Service

Campbell, CA
(408) 377-2988
tdsbay@cs.com

File Name : 16PM FINAL
Site Code : 00000016
Start Date : 2/12/2013
Page No : 2

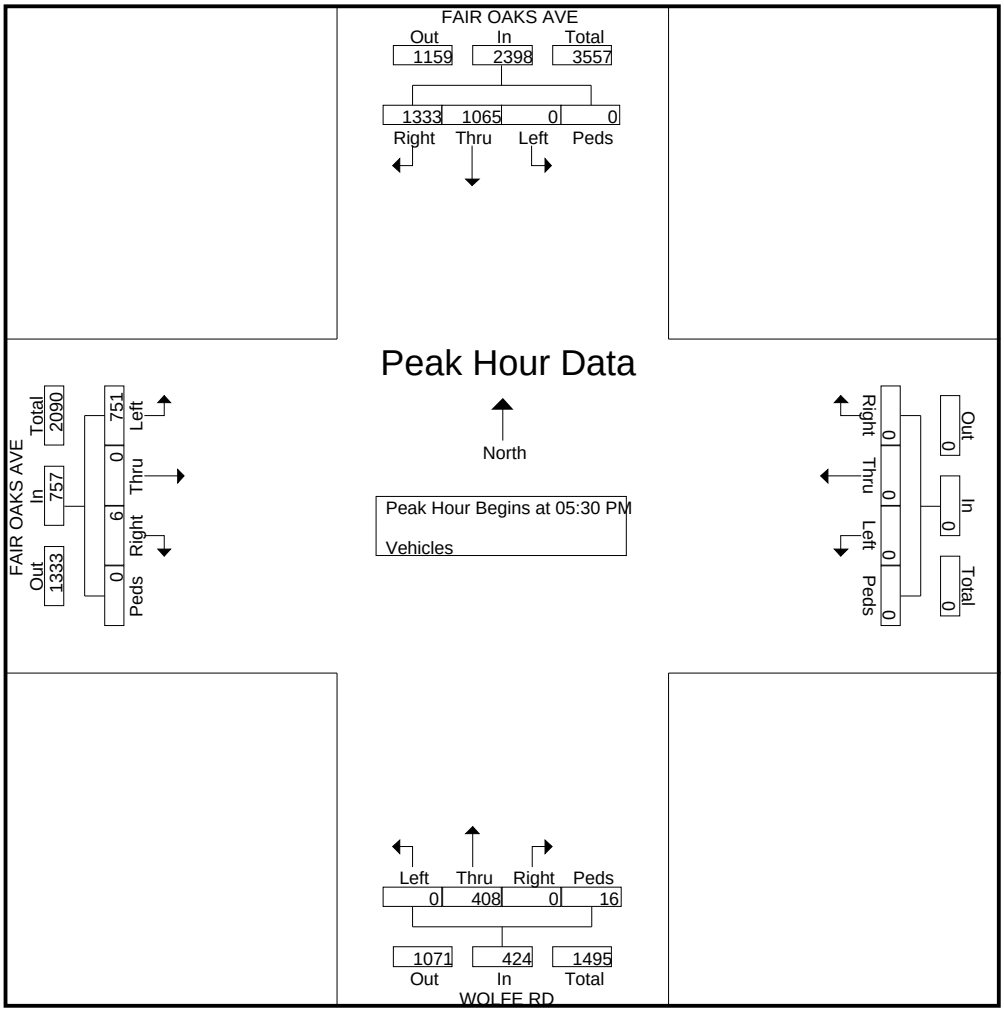

Traffic Data Service

Campbell, CA
(408) 377-2988
tdsbay@cs.com

File Name : 16AM FINAL
Site Code : 00000016
Start Date : 2/12/2013
Page No : 1

Groups Printed- Bikes

	FAIR OAKS AVE Southbound					Westbound					WOLFE RD Northbound					FAIR OAKS AVE Eastbound					
Start Time	Right	Thru	Left	Peds	App. Total	Right	Thru	Left	Peds	App. Total	Right	Thru	Left	Peds	App. Total	Right	Thru	Left	Peds	App. Total	Int. Total
07:00 AM	0	0	0	0	0	0	0	0	0	0	0	1	0	0	1	0	0	0	0	0	1
07:15 AM	0	0	0	0	0	0	0	0	0	0	0	2	0	0	2	0	0	1	0	1	3
07:30 AM	0	0	0	0	0	0	0	0	0	0	0	1	0	0	1	0	0	0	0	0	1
07:45 AM	0	0	0	0	0	0	0	0	0	0	0	0	0	0	0	0	0	2	0	2	2
Total	0	0	0	0	0	0	0	0	0	0	0	4	0	0	4	0	0	3	0	3	7
08:00 AM	0	0	0	0	0	0	0	0	0	0	0	0	0	0	0	0	0	0	0	0	0
08:15 AM	0	0	0	0	0	0	0	0	0	0	0	0	0	0	0	0	0	0	0	0	0
08:30 AM	0	1	0	0	1	0	0	0	0	0	0	1	0	0	1	0	0	0	0	0	2
08:45 AM	0	0	0	0	0	0	0	0	0	0	0	0	0	0	0	0	0	0	0	0	0
Total	0	1	0	0	1	0	0	0	0	0	0	1	0	0	1	0	0	0	0	0	2
Grand Total	0	1	0	0	1	0	0	0	0	0	0	5	0	0	5	0	0	3	0	3	9
Apprch %	0	100	0	0		0	0	0	0		0	100	0	0		0	0	100	0		
Total %	0	11.1	0	0	11.1	0	0	0	0	0	0	55.6	0	0	55.6	0	0	33.3	0	33.3	

	FAIR OAKS AVE Southbound					Westbound					WOLFE RD Northbound					FAIR OAKS AVE Eastbound					
Start Time	Right	Thru	Left	Peds	App. Total	Right	Thru	Left	Peds	App. Total	Right	Thru	Left	Peds	App. Total	Right	Thru	Left	Peds	App. Total	Int. Total
Peak Hour Analysis From 07:00 AM to 08:45 AM - Peak 1 of 1																					
Peak Hour for Entire Intersection Begins at 07:00 AM																					
07:00 AM	0	0	0	0	0	0	0	0	0	0	0	1	0	0	1	0	0	0	0	0	1
07:15 AM	0	0	0	0	0	0	0	0	0	0	0	**2**	0	0	**2**	0	0	1	0	1	**3**
07:30 AM	0	0	0	0	0	0	0	0	0	0	0	1	0	0	1	0	0	0	0	0	1
07:45 AM	0	0	0	0	0	0	0	0	0	0	0	0	0	0	0	0	0	**2**	0	**2**	2
Total Volume	0	0	0	0	0	0	0	0	0	0	0	4	0	0	4	0	0	3	0	3	7
% App. Total	0	0	0	0		0	0	0	0		0	100	0	0		0	0	100	0		
PHF	.000	.000	.000	.000	.000	.000	.000	.000	.000	.000	.000	.500	.000	.000	.500	.000	.000	.375	.000	.375	.583

Traffic Data Service

Campbell, CA
(408) 377-2988
tdsbay@cs.com

File Name : 16AM FINAL
Site Code : 00000016
Start Date : 2/12/2013
Page No : 2

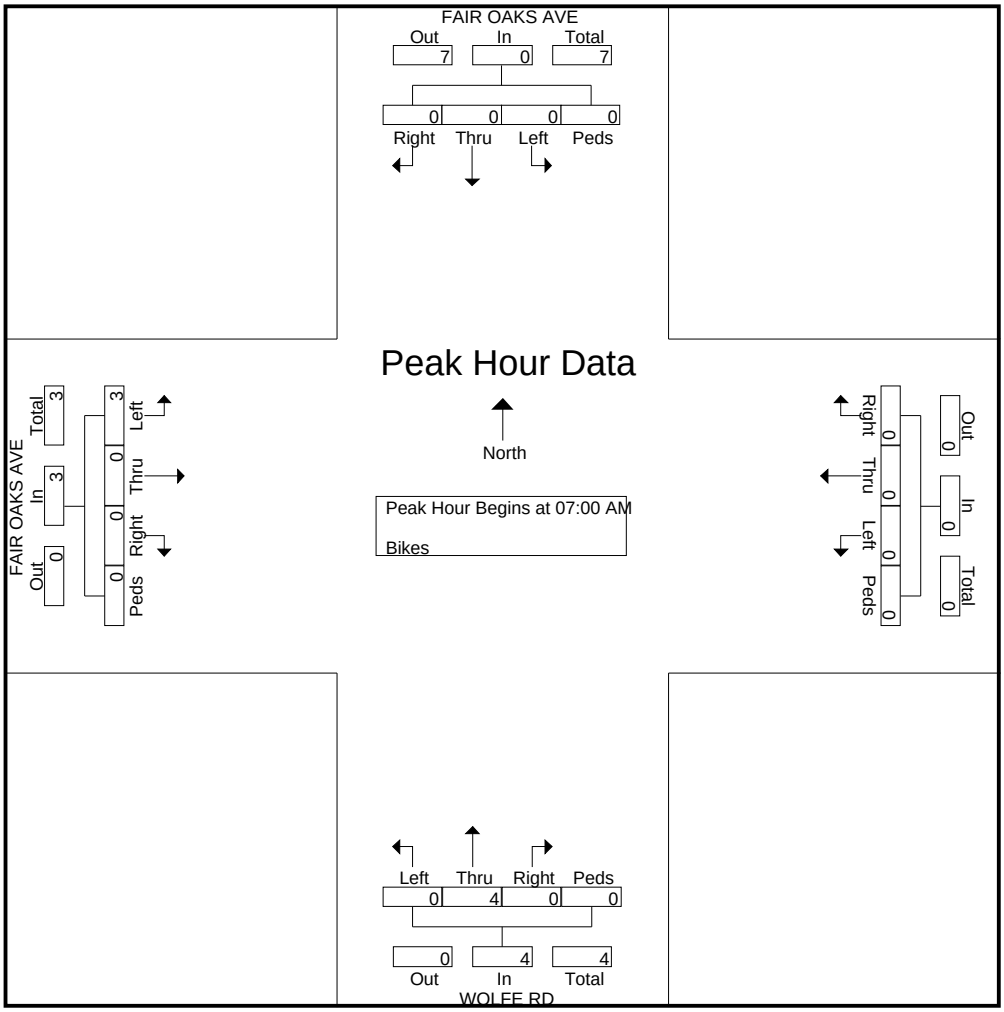

Traffic Data Service

Campbell, CA
(408) 377-2988
tdsbay@cs.com

File Name : 16AM FINAL
Site Code : 00000016
Start Date : 2/12/2013
Page No : 1

Groups Printed- Vehicles

	FAIR OAKS AVE Southbound					Westbound					WOLFE RD Northbound					FAIR OAKS AVE Eastbound					
Start Time	Right	Thru	Left	Peds	App. Total	Right	Thru	Left	Peds	App. Total	Right	Thru	Left	Peds	App. Total	Right	Thru	Left	Peds	App. Total	Int. Total
07:00 AM	168	35	0	0	203	0	0	0	0	0	0	52	0	0	52	1	0	97	0	98	353
07:15 AM	161	51	0	0	212	0	0	0	0	0	0	64	0	0	64	1	0	120	0	121	397
07:30 AM	166	62	0	0	228	0	0	0	0	0	0	137	0	0	137	0	0	246	0	246	611
07:45 AM	199	77	0	0	276	0	0	0	0	0	0	157	0	0	157	0	0	203	0	203	636
Total	694	225	0	0	919	0	0	0	0	0	0	410	0	0	410	2	0	666	0	668	1997
08:00 AM	173	74	0	0	247	0	0	0	0	0	0	92	0	0	92	0	0	155	0	155	494
08:15 AM	145	78	0	0	223	0	0	0	0	0	0	105	0	0	105	0	0	160	0	160	488
08:30 AM	125	67	0	0	192	0	0	0	0	0	0	146	0	0	146	0	0	234	0	234	572
08:45 AM	172	68	0	0	240	0	0	0	0	0	0	148	0	0	148	0	0	201	0	201	589
Total	615	287	0	0	902	0	0	0	0	0	0	491	0	0	491	0	0	750	0	750	2143
Grand Total	1309	512	0	0	1821	0	0	0	0	0	0	901	0	0	901	2	0	1416	0	1418	4140
Apprch %	71.9	28.1	0	0		0	0	0	0		0	100	0	0		0.1	0	99.9	0		
Total %	31.6	12.4	0	0	44	0	0	0	0	0	0	21.8	0	0	21.8	0	0	34.2	0	34.3	

	FAIR OAKS AVE Southbound					Westbound					WOLFE RD Northbound					FAIR OAKS AVE Eastbound					
Start Time	Right	Thru	Left	Peds	App. Total	Right	Thru	Left	Peds	App. Total	Right	Thru	Left	Peds	App. Total	Right	Thru	Left	Peds	App. Total	Int. Total
Peak Hour Analysis From 07:00 AM to 08:45 AM - Peak 1 of 1																					
Peak Hour for Entire Intersection Begins at 07:30 AM																					
07:30 AM	166	62	0	0	228	0	0	0	0	0	0	137	0	0	137	0	0	**246**	0	**246**	611
07:45 AM	**199**	77	0	0	**276**	0	0	0	0	0	0	**157**	0	0	**157**	0	0	203	0	203	**636**
08:00 AM	173	74	0	0	247	0	0	0	0	0	0	92	0	0	92	0	0	155	0	155	494
08:15 AM	145	**78**	0	0	223	0	0	0	0	0	0	105	0	0	105	0	0	160	0	160	488
Total Volume	683	291	0	0	974	0	0	0	0	0	0	491	0	0	491	0	0	764	0	764	2229
% App. Total	70.1	29.9	0	0		0	0	0	0		0	100	0	0		0	0	100	0		
PHF	.858	.933	.000	.000	.882	.000	.000	.000	.000	.000	.000	.782	.000	.000	.782	.000	.000	.776	.000	.776	.876

Traffic Data Service

Campbell, CA
(408) 377-2988
tdsbay@cs.com

File Name : 16AM FINAL
Site Code : 00000016
Start Date : 2/12/2013
Page No : 2

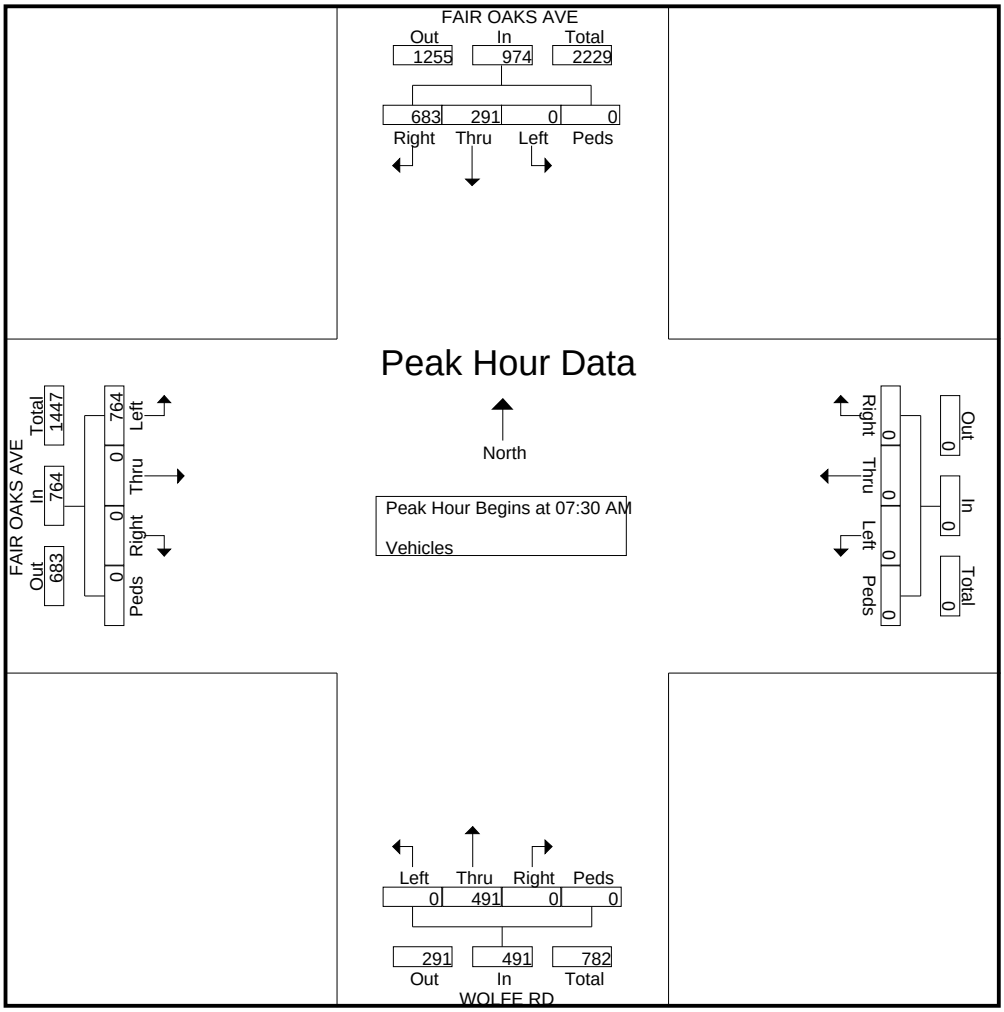

Traffic Data Service

Campbell, CA
(408) 377-2988
tdsbay@cs.com

File Name : 15PM FINAL
Site Code : 00000015
Start Date : 2/12/2013
Page No : 1

Groups Printed- Bikes

	BORREGAS AVE Southbound					CARIBBEAN DR Westbound					BORREGAS AVE Northbound					CARIBBEAN DR Eastbound					
Start Time	Right	Thru	Left	Peds	App. Total	Right	Thru	Left	Peds	App. Total	Right	Thru	Left	Peds	App. Total	Right	Thru	Left	Peds	App. Total	Int. Total
04:30 PM	0	0	0	0	0	0	0	0	0	0	0	0	0	0	0	0	1	0	0	1	1
04:45 PM	0	0	0	0	0	0	0	0	0	0	0	0	0	0	0	0	2	0	0	2	2
Total	0	0	0	0	0	0	0	0	0	0	0	0	0	0	0	0	3	0	0	3	3
05:00 PM	0	0	0	0	0	0	0	0	0	0	1	0	0	0	1	0	0	0	0	0	1
05:15 PM	0	0	1	0	1	1	0	0	0	1	0	0	0	0	0	0	0	0	0	0	2
05:30 PM	0	0	0	0	0	1	0	0	0	1	0	0	0	0	0	0	1	0	0	1	2
05:45 PM	0	1	0	0	1	1	0	0	0	1	0	0	0	0	0	0	2	0	0	2	4
Total	0	1	1	0	2	3	0	0	0	3	1	0	0	0	1	0	3	0	0	3	9
06:00 PM	0	0	0	0	0	0	0	0	0	0	0	0	0	0	0	0	1	0	0	1	1
06:15 PM	0	0	0	0	0	1	0	0	0	1	0	0	0	0	0	0	0	0	0	0	1
Grand Total	0	1	1	0	2	4	0	0	0	4	1	0	0	0	1	0	7	0	0	7	14
Apprch %	0	50	50	0		100	0	0	0		100	0	0	0		0	100	0	0		
Total %	0	7.1	7.1	0	14.3	28.6	0	0	0	28.6	7.1	0	0	0	7.1	0	50	0	0	50	

	BORREGAS AVE Southbound					CARIBBEAN DR Westbound					BORREGAS AVE Northbound					CARIBBEAN DR Eastbound					
Start Time	Right	Thru	Left	Peds	App. Total	Right	Thru	Left	Peds	App. Total	Right	Thru	Left	Peds	App. Total	Right	Thru	Left	Peds	App. Total	Int. Total
Peak Hour Analysis From 04:30 PM to 06:15 PM - Peak 1 of 1																					
Peak Hour for Entire Intersection Begins at 05:00 PM																					
05:00 PM	0	0	0	0	0	0	0	0	0	0	**1**	0	0	0	**1**	0	0	0	0	0	1
05:15 PM	0	0	**1**	0	**1**	**1**	0	0	0	**1**	0	0	0	0	0	0	0	0	0	0	2
05:30 PM	0	0	0	0	0	1	0	0	0	1	0	0	0	0	0	0	1	0	0	1	2
05:45 PM	0	**1**	0	0	1	1	0	0	0	1	0	0	0	0	0	0	**2**	0	0	**2**	**4**
Total Volume	0	1	1	0	2	3	0	0	0	3	1	0	0	0	1	0	3	0	0	3	9
% App. Total	0	50	50	0		100	0	0	0		100	0	0	0		0	100	0	0		
PHF	.000	.250	.250	.000	.500	.750	.000	.000	.000	.750	.250	.000	.000	.000	.250	.000	.375	.000	.000	.375	.563

Traffic Data Service

Campbell, CA
(408) 377-2988
tdsbay@cs.com

File Name : 15PM FINAL
Site Code : 00000015
Start Date : 2/12/2013
Page No : 2

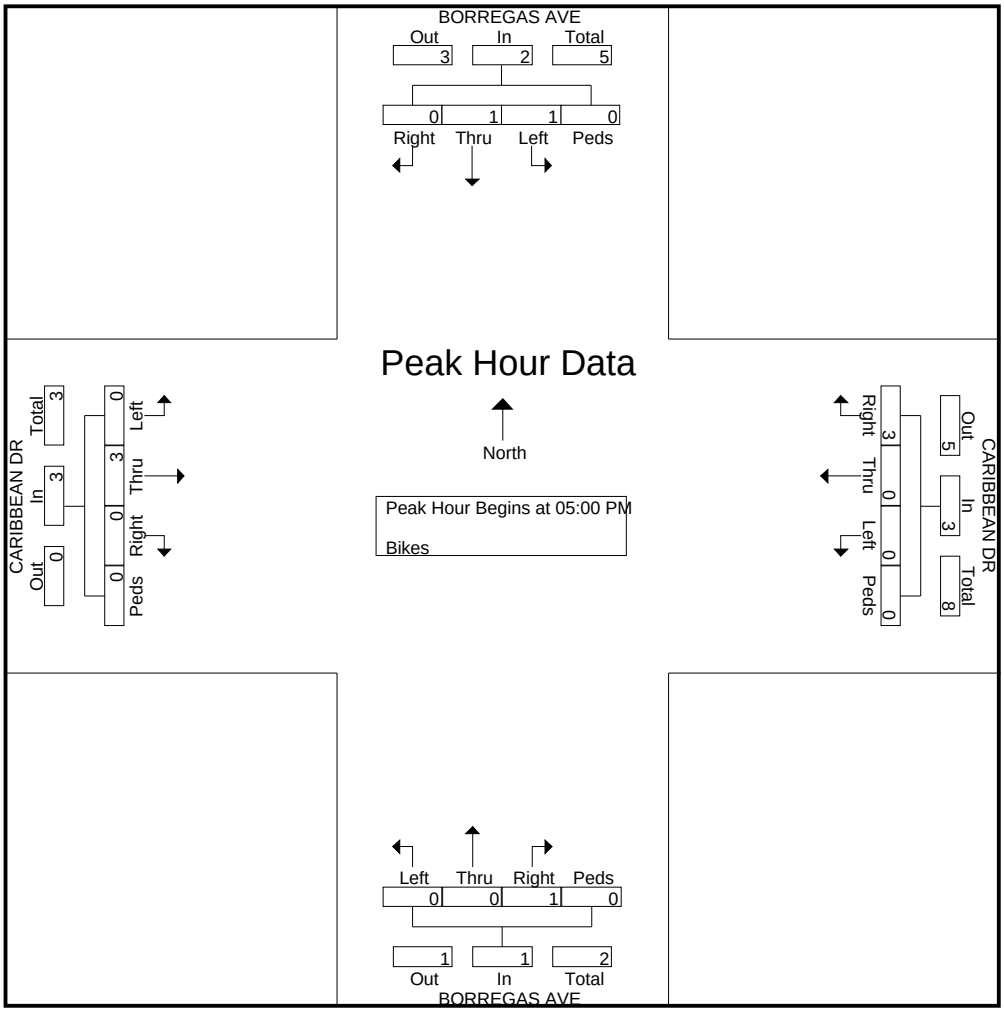

Traffic Data Service

Campbell, CA
(408) 377-2988
tdsbay@cs.com

File Name : 15PM FINAL
Site Code : 00000015
Start Date : 2/12/2013
Page No : 1

Groups Printed- Vehicles

	BORREGAS AVE Southbound					CARIBBEAN DR Westbound					BORREGAS AVE Northbound					CARIBBEAN DR Eastbound					
Start Time	Right	Thru	Left	Peds	App. Total	Right	Thru	Left	Peds	App. Total	Right	Thru	Left	Peds	App. Total	Right	Thru	Left	Peds	App. Total	Int. Total
04:30 PM	5	2	8	0	15	0	11	6	0	17	44	3	1	0	48	4	129	4	0	137	217
04:45 PM	2	2	5	0	9	2	23	9	0	34	25	1	1	0	27	1	154	3	0	158	228
Total	7	4	13	0	24	2	34	15	0	51	69	4	2	0	75	5	283	7	0	295	445
05:00 PM	1	4	13	0	18	1	24	7	0	32	62	1	0	0	63	7	166	3	0	176	289
05:15 PM	2	1	3	0	6	2	14	3	1	20	44	1	0	0	45	6	135	2	0	143	214
05:30 PM	1	1	2	0	4	0	22	8	0	30	34	1	2	0	37	0	129	1	0	130	201
05:45 PM	1	1	7	0	9	0	25	10	0	35	32	0	0	0	32	6	140	1	0	147	223
Total	5	7	25	0	37	3	85	28	1	117	172	3	2	0	177	19	570	7	0	596	927
06:00 PM	1	0	2	0	3	0	23	14	0	37	43	0	5	0	48	1	133	1	0	135	223
06:15 PM	0	1	1	0	2	0	16	4	0	20	28	0	1	0	29	3	125	1	0	129	180
Grand Total	13	12	41	0	66	5	158	61	1	225	312	7	10	0	329	28	1111	16	0	1155	1775
Apprch %	19.7	18.2	62.1	0		2.2	70.2	27.1	0.4		94.8	2.1	3	0		2.4	96.2	1.4	0		
Total %	0.7	0.7	2.3	0	3.7	0.3	8.9	3.4	0.1	12.7	17.6	0.4	0.6	0	18.5	1.6	62.6	0.9	0	65.1	

	BORREGAS AVE Southbound					CARIBBEAN DR Westbound					BORREGAS AVE Northbound					CARIBBEAN DR Eastbound					
Start Time	Right	Thru	Left	Peds	App. Total	Right	Thru	Left	Peds	App. Total	Right	Thru	Left	Peds	App. Total	Right	Thru	Left	Peds	App. Total	Int. Total
Peak Hour Analysis From 04:30 PM to 06:15 PM - Peak 1 of 1																					
Peak Hour for Entire Intersection Begins at 04:30 PM																					
04:30 PM	**5**	2	8	0	15	0	11	6	0	17	44	**3**	**1**	0	48	4	129	**4**	0	137	217
04:45 PM	2	2	5	0	9	**2**	23	**9**	0	**34**	25	1	1	0	27	1	154	3	0	158	228
05:00 PM	1	**4**	**13**	0	**18**	1	**24**	7	0	32	**62**	1	0	0	**63**	**7**	**166**	3	0	**176**	**289**
05:15 PM	2	1	3	0	6	2	14	3	**1**	20	44	1	0	0	45	6	135	2	0	143	214
Total Volume	10	9	29	0	48	5	72	25	1	103	175	6	2	0	183	18	584	12	0	614	948
% App. Total	20.8	18.8	60.4	0		4.9	69.9	24.3	1		95.6	3.3	1.1	0		2.9	95.1	2	0		
PHF	.500	.563	.558	.000	.667	.625	.750	.694	.250	.757	.706	.500	.500	.000	.726	.643	.880	.750	.000	.872	.820

Traffic Data Service

Campbell, CA

(408) 377-2988

tdsbay@cs.com

File Name : 15PM FINAL
Site Code : 00000015
Start Date : 2/12/2013
Page No : 2

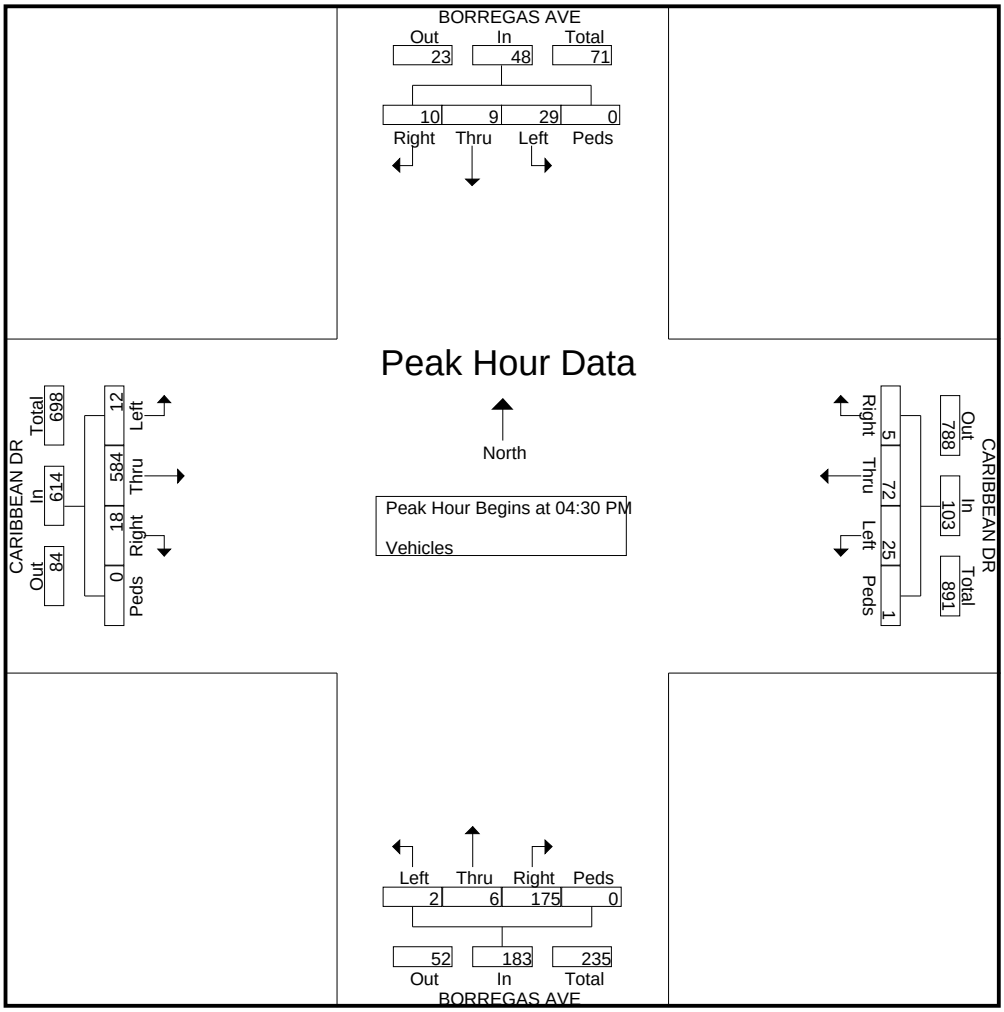

Traffic Data Service

Campbell, CA
(408) 377-2988
tdsbay@cs.com

File Name : 15AM FINAL
Site Code : 00000015
Start Date : 2/12/2013
Page No : 1

Groups Printed- Bikes

	BORREGAS AVE Southbound					CARIBBEAN DR Westbound					BORREGAS AVE Northbound					CARIBBEAN DR Eastbound					
Start Time	Right	Thru	Left	Peds	App. Total	Right	Thru	Left	Peds	App. Total	Right	Thru	Left	Peds	App. Total	Right	Thru	Left	Peds	App. Total	Int. Total
07:00 AM	0	0	0	0	0	2	0	0	0	2	0	0	0	0	0	0	0	0	0	0	2
07:15 AM	0	0	0	0	0	0	2	0	0	2	0	0	0	0	0	0	0	0	0	0	2
07:30 AM	0	0	0	0	0	0	0	1	0	1	0	0	0	0	0	0	0	0	0	0	1
07:45 AM	0	2	0	0	2	0	1	0	0	1	0	0	0	0	0	0	0	0	0	0	3
Total	0	2	0	0	2	2	3	1	0	6	0	0	0	0	0	0	0	0	0	0	8
08:00 AM	0	0	0	0	0	0	0	0	0	0	0	0	0	0	0	0	0	0	0	0	0
08:15 AM	0	0	0	0	0	1	0	0	0	1	0	0	0	0	0	0	0	0	0	0	1
08:30 AM	0	0	0	0	0	1	1	0	0	2	0	0	0	0	0	0	0	0	0	0	2
08:45 AM	0	0	0	0	0	0	0	0	0	0	1	0	0	0	1	0	0	0	0	0	1
Total	0	0	0	0	0	2	1	0	0	3	1	0	0	0	1	0	0	0	0	0	4
Grand Total	0	2	0	0	2	4	4	1	0	9	1	0	0	0	1	0	0	0	0	0	12
Apprch %	0	100	0	0		44.4	44.4	11.1	0		100	0	0	0		0	0	0	0		
Total %	0	16.7	0	0	16.7	33.3	33.3	8.3	0	75	8.3	0	0	0	8.3	0	0	0	0	0	

	BORREGAS AVE Southbound					CARIBBEAN DR Westbound					BORREGAS AVE Northbound					CARIBBEAN DR Eastbound					
Start Time	Right	Thru	Left	Peds	App. Total	Right	Thru	Left	Peds	App. Total	Right	Thru	Left	Peds	App. Total	Right	Thru	Left	Peds	App. Total	Int. Total
Peak Hour Analysis From 07:00 AM to 08:45 AM - Peak 1 of 1																					
Peak Hour for Entire Intersection Begins at 07:00 AM																					
07:00 AM	0	0	0	0	0	**2**	0	0	0	**2**	0	0	0	0	0	0	0	0	0	0	2
07:15 AM	0	0	0	0	0	0	**2**	0	0	2	0	0	0	0	0	0	0	0	0	0	2
07:30 AM	0	0	0	0	0	0	0	**1**	0	1	0	0	0	0	0	0	0	0	0	0	1
07:45 AM	0	**2**	0	0	**2**	0	1	0	0	1	0	0	0	0	0	0	0	0	0	0	**3**
Total Volume	0	2	0	0	2	2	3	1	0	6	0	0	0	0	0	0	0	0	0	0	8
% App. Total	0	100	0	0		33.3	50	16.7	0		0	0	0	0		0	0	0	0		
PHF	.000	.250	.000	.000	.250	.250	.375	.250	.000	.750	.000	.000	.000	.000	.000	.000	.000	.000	.000	.000	.667

Traffic Data Service

Campbell, CA
(408) 377-2988
tdsbay@cs.com

File Name : 15AM FINAL
Site Code : 00000015
Start Date : 2/12/2013
Page No : 2

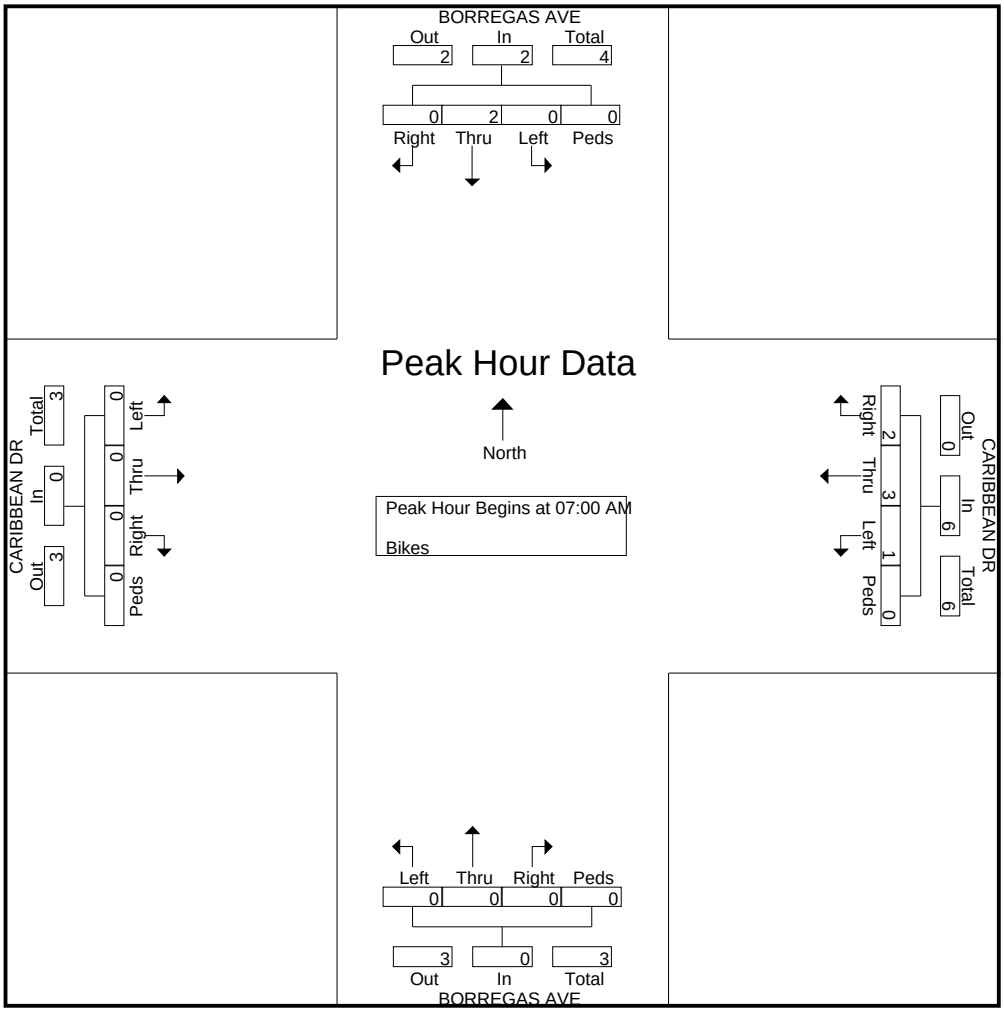

Traffic Data Service

Campbell, CA
(408) 377-2988
tdsbay@cs.com

File Name : 15AM FINAL
Site Code : 00000015
Start Date : 2/12/2013
Page No : 1

Groups Printed- Vehicles

	BORREGAS AVE Southbound					CARIBBEAN DR Westbound					BORREGAS AVE Northbound					CARIBBEAN DR Eastbound					
Start Time	Right	Thru	Left	Peds	App. Total	Right	Thru	Left	Peds	App. Total	Right	Thru	Left	Peds	App. Total	Right	Thru	Left	Peds	App. Total	Int. Total
07:00 AM	1	1	11	0	13	7	131	37	0	175	1	1	0	0	2	5	6	2	0	13	203
07:15 AM	6	0	9	0	15	2	165	40	0	207	0	4	2	2	8	6	7	4	0	17	247
07:30 AM	3	2	7	0	12	7	149	47	0	203	2	2	1	0	5	3	11	14	0	28	248
07:45 AM	10	1	6	0	17	17	154	50	0	221	8	2	1	0	11	2	12	11	0	25	274
Total	20	4	33	0	57	33	599	174	0	806	11	9	4	2	26	16	36	31	0	83	972
08:00 AM	8	5	12	0	25	16	160	56	0	232	4	5	0	0	9	3	27	13	0	43	309
08:15 AM	10	1	12	0	23	14	163	60	0	237	6	0	1	0	7	5	16	18	0	39	306
08:30 AM	10	1	5	0	16	9	153	49	1	212	6	1	0	0	7	2	21	8	0	31	266
08:45 AM	13	0	13	0	26	7	205	86	0	298	1	5	0	0	6	2	26	17	0	45	375
Total	41	7	42	0	90	46	681	251	1	979	17	11	1	0	29	12	90	56	0	158	1256
Grand Total	61	11	75	0	147	79	1280	425	1	1785	28	20	5	2	55	28	126	87	0	241	2228
Apprch %	41.5	7.5	51	0		4.4	71.7	23.8	0.1		50.9	36.4	9.1	3.6		11.6	52.3	36.1	0		
Total %	2.7	0.5	3.4	0	6.6	3.5	57.5	19.1	0	80.1	1.3	0.9	0.2	0.1	2.5	1.3	5.7	3.9	0	10.8	

	BORREGAS AVE Southbound					CARIBBEAN DR Westbound					BORREGAS AVE Northbound					CARIBBEAN DR Eastbound					
Start Time	Right	Thru	Left	Peds	App. Total	Right	Thru	Left	Peds	App. Total	Right	Thru	Left	Peds	App. Total	Right	Thru	Left	Peds	App. Total	Int. Total
Peak Hour Analysis From 07:00 AM to 08:45 AM - Peak 1 of 1																					
Peak Hour for Entire Intersection Begins at 08:00 AM																					
08:00 AM	8	**5**	12	0	25	**16**	160	56	0	232	4	**5**	0	0	**9**	3	**27**	13	0	43	309
08:15 AM	10	1	12	0	23	14	163	60	0	237	**6**	0	**1**	0	7	**5**	16	**18**	0	39	306
08:30 AM	10	1	5	0	16	9	153	49	**1**	212	6	1	0	0	7	2	21	8	0	31	266
08:45 AM	**13**	0	**13**	0	**26**	7	**205**	**86**	0	**298**	1	5	0	0	6	2	26	17	0	**45**	**375**
Total Volume	41	7	42	0	90	46	681	251	1	979	17	11	1	0	29	12	90	56	0	158	1256
% App. Total	45.6	7.8	46.7	0		4.7	69.6	25.6	0.1		58.6	37.9	3.4	0		7.6	57	35.4	0		
PHF	.788	.350	.808	.000	.865	.719	.830	.730	.250	.821	.708	.550	.250	.000	.806	.600	.833	.778	.000	.878	.837

Traffic Data Service

Campbell, CA
(408) 377-2988
tdsbay@cs.com

File Name : 15AM FINAL
Site Code : 00000015
Start Date : 2/12/2013
Page No : 2

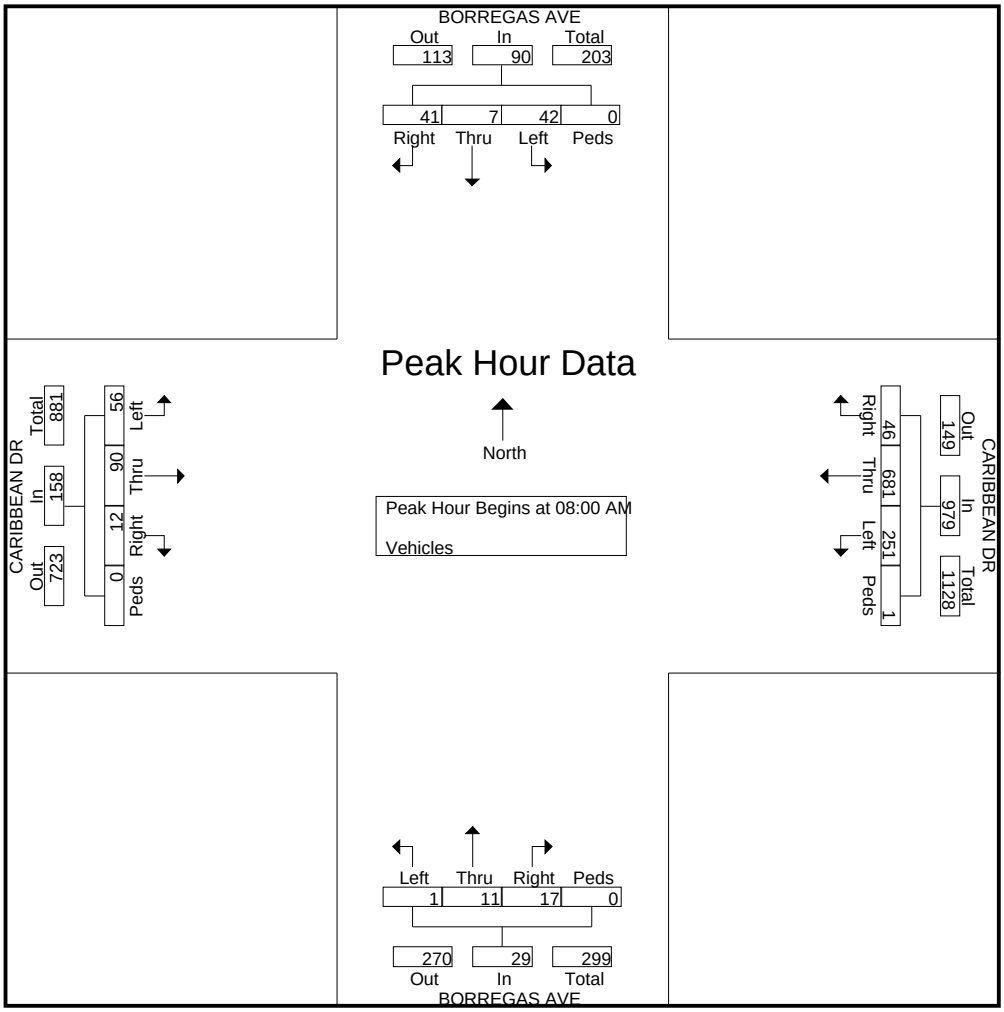

Traffic Data Service

Campbell, CA
(408) 377-2988
tdsbay@cs.com

File Name : 14PM FINAL
Site Code : 00000014
Start Date : 2/12/2013
Page No : 1

Groups Printed- Bikes

	BORDEAUX DR Southbound					MOFFETT PARK DR Westbound					Northbound					MOFFETT PARK DR Eastbound					
Start Time	Right	Thru	Left	Peds	App. Total	Right	Thru	Left	Peds	App. Total	Right	Thru	Left	Peds	App. Total	Right	Thru	Left	Peds	App. Total	Int. Total
04:30 PM	0	0	3	0	3	0	1	0	0	1	0	0	0	0	0	0	0	0	0	0	4
04:45 PM	0	0	1	0	1	0	1	0	0	1	0	0	0	0	0	0	1	0	0	1	3
Total	0	0	4	0	4	0	2	0	0	2	0	0	0	0	0	0	1	0	0	1	7
05:00 PM	1	0	1	0	2	0	1	0	0	1	0	0	0	0	0	0	2	0	0	2	5
05:15 PM	2	0	1	0	3	0	4	0	0	4	0	0	0	0	0	0	3	0	0	3	10
05:30 PM	0	0	2	0	2	0	3	0	0	3	0	0	0	0	0	0	3	0	0	3	8
05:45 PM	0	0	0	0	0	0	5	0	0	5	0	0	0	0	0	0	3	0	0	3	8
Total	3	0	4	0	7	0	13	0	0	13	0	0	0	0	0	0	11	0	0	11	31
06:00 PM	0	0	0	0	0	0	6	0	0	6	0	0	0	0	0	0	2	0	0	2	8
06:15 PM	2	0	2	0	4	0	4	0	0	4	0	0	0	0	0	0	0	0	0	0	8
Grand Total	5	0	10	0	15	0	25	0	0	25	0	0	0	0	0	0	14	0	0	14	54
Apprch %	33.3	0	66.7	0		0	100	0	0		0	0	0	0		0	100	0	0		
Total %	9.3	0	18.5	0	27.8	0	46.3	0	0	46.3	0	0	0	0	0	0	25.9	0	0	25.9	

	BORDEAUX DR Southbound					MOFFETT PARK DR Westbound					Northbound					MOFFETT PARK DR Eastbound					
Start Time	Right	Thru	Left	Peds	App. Total	Right	Thru	Left	Peds	App. Total	Right	Thru	Left	Peds	App. Total	Right	Thru	Left	Peds	App. Total	Int. Total
Peak Hour Analysis From 04:30 PM to 06:15 PM - Peak 1 of 1																					
Peak Hour for Entire Intersection Begins at 05:15 PM																					
05:15 PM	**2**	0	1	0	**3**	0	4	0	0	4	0	0	0	0	0	0	**3**	0	0	**3**	**10**
05:30 PM	0	0	**2**	0	2	0	3	0	0	3	0	0	0	0	0	0	3	0	0	3	8
05:45 PM	0	0	0	0	0	0	5	0	0	5	0	0	0	0	0	0	3	0	0	3	8
06:00 PM	0	0	0	0	0	0	**6**	0	0	**6**	0	0	0	0	0	0	2	0	0	2	8
Total Volume	2	0	3	0	5	0	18	0	0	18	0	0	0	0	0	0	11	0	0	11	34
% App. Total	40	0	60	0		0	100	0	0		0	0	0	0		0	100	0	0		
PHF	.250	.000	.375	.000	.417	.000	.750	.000	.000	.750	.000	.000	.000	.000	.000	.000	.917	.000	.000	.917	.850

Traffic Data Service

Campbell, CA
(408) 377-2988
tdsbay@cs.com

File Name : 14PM FINAL
Site Code : 00000014
Start Date : 2/12/2013
Page No : 2

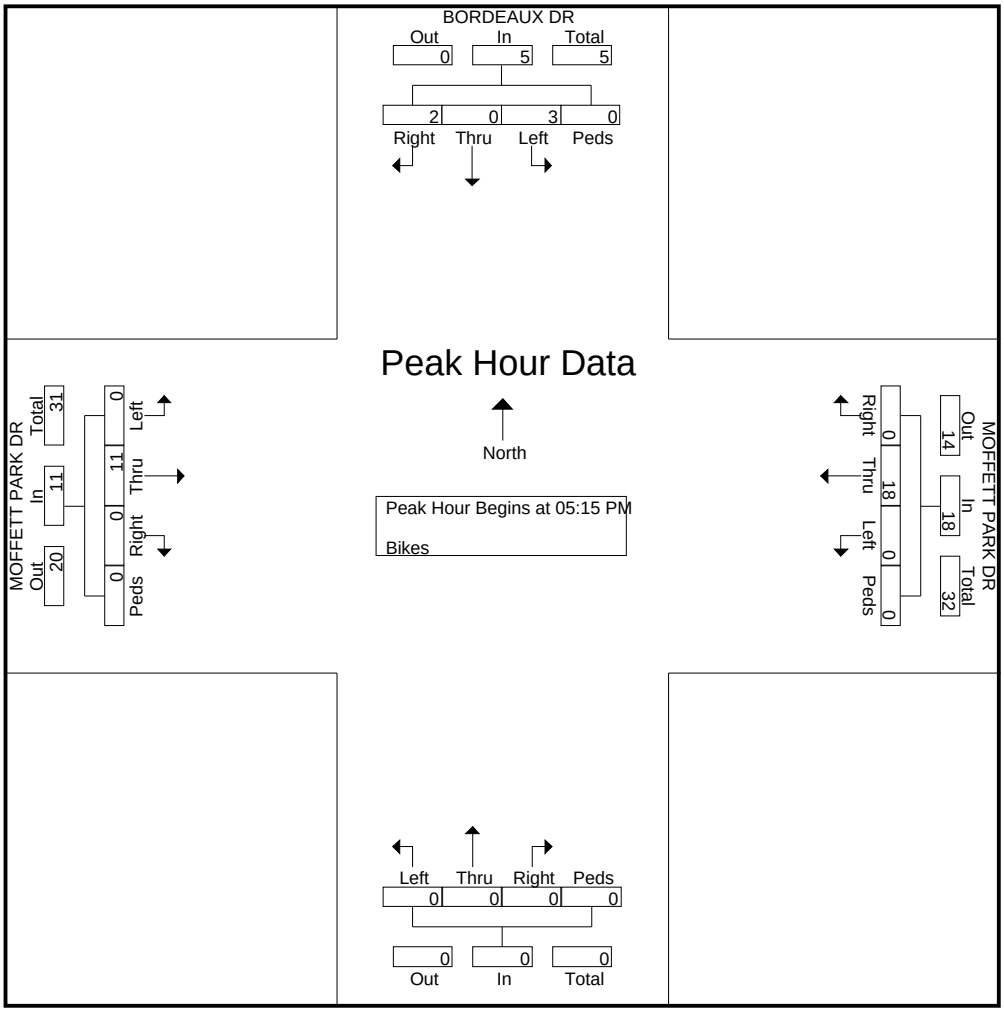

Traffic Data Service

Campbell, CA
(408) 377-2988
tdsbay@cs.com

File Name : 14PM FINAL
Site Code : 00000014
Start Date : 2/12/2013
Page No : 1

Groups Printed- Vehicles

	BORDEAUX DR Southbound					MOFFETT PARK DR Westbound					Northbound					MOFFETT PARK DR Eastbound					
Start Time	Right	Thru	Left	Peds	App. Total	Right	Thru	Left	Peds	App. Total	Right	Thru	Left	Peds	App. Total	Right	Thru	Left	Peds	App. Total	Int. Total
04:30 PM	47	0	6	0	53	5	71	0	0	76	0	0	0	0	0	0	41	23	0	64	193
04:45 PM	49	0	5	0	54	0	72	0	0	72	0	0	0	0	0	0	29	6	0	35	161
Total	96	0	11	0	107	5	143	0	0	148	0	0	0	0	0	0	70	29	0	99	354
05:00 PM	50	0	6	0	56	1	91	0	0	92	0	0	0	0	0	0	35	9	0	44	192
05:15 PM	49	0	10	0	59	4	95	0	0	99	0	0	0	0	0	0	39	12	0	51	209
05:30 PM	40	0	8	0	48	7	88	0	0	95	0	0	0	0	0	0	53	11	0	64	207
05:45 PM	34	0	8	2	44	4	103	0	0	107	0	0	0	0	0	0	39	9	0	48	199
Total	173	0	32	2	207	16	377	0	0	393	0	0	0	0	0	0	166	41	0	207	807
06:00 PM	43	0	4	0	47	3	126	0	0	129	0	0	0	0	0	0	23	6	0	29	205
06:15 PM	46	0	7	0	53	0	95	0	0	95	0	0	0	0	0	0	32	8	0	40	188
Grand Total	358	0	54	2	414	24	741	0	0	765	0	0	0	0	0	0	291	84	0	375	1554
Apprch %	86.5	0	13	0.5		3.1	96.9	0	0		0	0	0	0		0	77.6	22.4	0		
Total %	23	0	3.5	0.1	26.6	1.5	47.7	0	0	49.2	0	0	0	0	0	0	18.7	5.4	0	24.1	

	BORDEAUX DR Southbound					MOFFETT PARK DR Westbound					Northbound					MOFFETT PARK DR Eastbound					
Start Time	Right	Thru	Left	Peds	App. Total	Right	Thru	Left	Peds	App. Total	Right	Thru	Left	Peds	App. Total	Right	Thru	Left	Peds	App. Total	Int. Total
Peak Hour Analysis From 04:30 PM to 06:15 PM - Peak 1 of 1																					
Peak Hour for Entire Intersection Begins at 05:15 PM																					
05:15 PM	**49**	0	**10**	0	**59**	4	95	0	0	99	0	0	0	0	0	0	39	**12**	0	51	**209**
05:30 PM	40	0	8	0	48	**7**	88	0	0	95	0	0	0	0	0	0	**53**	11	0	**64**	207
05:45 PM	34	0	8	**2**	44	4	103	0	0	107	0	0	0	0	0	0	39	9	0	48	199
06:00 PM	43	0	4	0	47	3	**126**	0	0	**129**	0	0	0	0	0	0	23	6	0	29	205
Total Volume	166	0	30	2	198	18	412	0	0	430	0	0	0	0	0	0	154	38	0	192	820
% App. Total	83.8	0	15.2	1		4.2	95.8	0	0		0	0	0	0		0	80.2	19.8	0		
PHF	.847	.000	.750	.250	.839	.643	.817	.000	.000	.833	.000	.000	.000	.000	.000	.000	.726	.792	.000	.750	.981

Traffic Data Service

Campbell, CA
(408) 377-2988
tdsbay@cs.com

File Name : 14PM FINAL
Site Code : 00000014
Start Date : 2/12/2013
Page No : 2

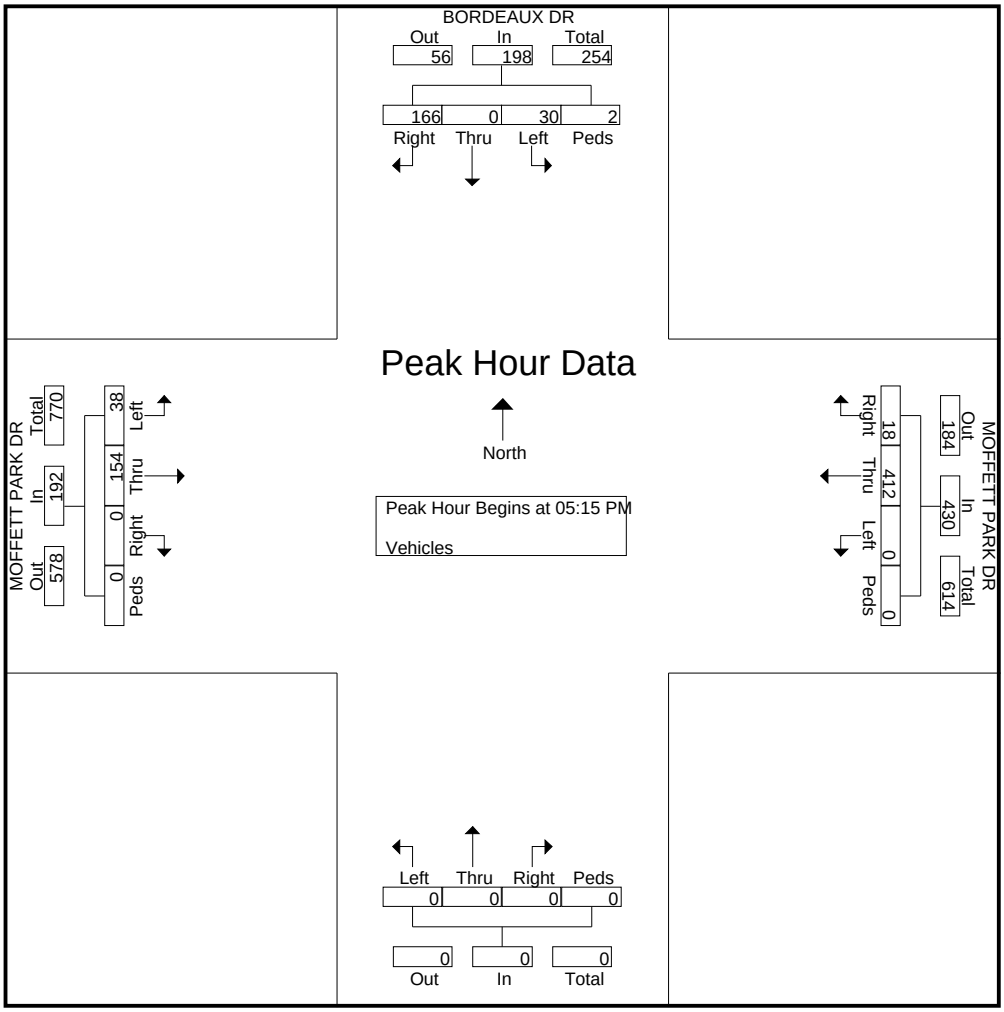

Traffic Data Service

Campbell, CA
(408) 377-2988
tdsbay@cs.com

File Name : 14AM FINAL
Site Code : 00000014
Start Date : 2/12/2013
Page No : 1

Groups Printed- Bikes

	BORDEAUX DR Southbound					MOFFETT PARK DR Westbound					Northbound					MOFFETT PARK DR Eastbound					
Start Time	Right	Thru	Left	Peds	App. Total	Right	Thru	Left	Peds	App. Total	Right	Thru	Left	Peds	App. Total	Right	Thru	Left	Peds	App. Total	Int. Total
07:00 AM	0	0	0	0	0	0	0	0	0	0	0	0	0	0	0	0	0	0	0	0	0
07:15 AM	0	0	0	0	0	0	0	0	0	0	0	0	0	0	0	0	0	0	0	0	0
07:30 AM	0	0	0	0	0	0	2	0	0	2	0	0	0	0	0	0	1	0	0	1	3
07:45 AM	0	0	0	0	0	0	4	0	0	4	0	0	0	0	0	0	1	1	0	2	6
Total	0	0	0	0	0	0	6	0	0	6	0	0	0	0	0	0	2	1	0	3	9
08:00 AM	0	0	0	0	0	1	0	0	0	1	0	0	0	0	0	0	3	0	0	3	4
08:15 AM	0	0	0	0	0	0	2	0	0	2	0	0	0	0	0	0	4	0	0	4	6
08:30 AM	0	0	0	0	0	0	2	0	0	2	0	0	0	0	0	0	4	0	0	4	6
08:45 AM	0	0	0	0	0	2	3	0	0	5	0	0	0	0	0	0	4	0	0	4	9
Total	0	0	0	0	0	3	7	0	0	10	0	0	0	0	0	0	15	0	0	15	25
Grand Total	0	0	0	0	0	3	13	0	0	16	0	0	0	0	0	0	17	1	0	18	34
Apprch %	0	0	0	0		18.8	81.2	0	0		0	0	0	0		0	94.4	5.6	0		
Total %	0	0	0	0	0	8.8	38.2	0	0	47.1	0	0	0	0	0	0	50	2.9	0	52.9	

	BORDEAUX DR Southbound					MOFFETT PARK DR Westbound					Northbound					MOFFETT PARK DR Eastbound					
Start Time	Right	Thru	Left	Peds	App. Total	Right	Thru	Left	Peds	App. Total	Right	Thru	Left	Peds	App. Total	Right	Thru	Left	Peds	App. Total	Int. Total
Peak Hour Analysis From 07:00 AM to 08:45 AM - Peak 1 of 1																					
Peak Hour for Entire Intersection Begins at 08:00 AM																					
08:00 AM	0	0	0	0	0	1	0	0	0	1	0	0	0	0	0	0	3	0	0	3	4
08:15 AM	0	0	0	0	0	0	2	0	0	2	0	0	0	0	0	0	**4**	0	0	**4**	6
08:30 AM	0	0	0	0	0	0	2	0	0	2	0	0	0	0	0	0	4	0	0	4	6
08:45 AM	0	0	0	0	0	**2**	**3**	0	0	**5**	0	0	0	0	0	0	4	0	0	4	**9**
Total Volume	0	0	0	0	0	3	7	0	0	10	0	0	0	0	0	0	15	0	0	15	25
% App. Total	0	0	0	0		30	70	0	0		0	0	0	0		0	100	0	0		
PHF	.000	.000	.000	.000	.000	.375	.583	.000	.000	.500	.000	.000	.000	.000	.000	.000	.938	.000	.000	.938	.694

Traffic Data Service

Campbell, CA
(408) 377-2988
tdsbay@cs.com

File Name : 14AM FINAL
Site Code : 00000014
Start Date : 2/12/2013
Page No : 2

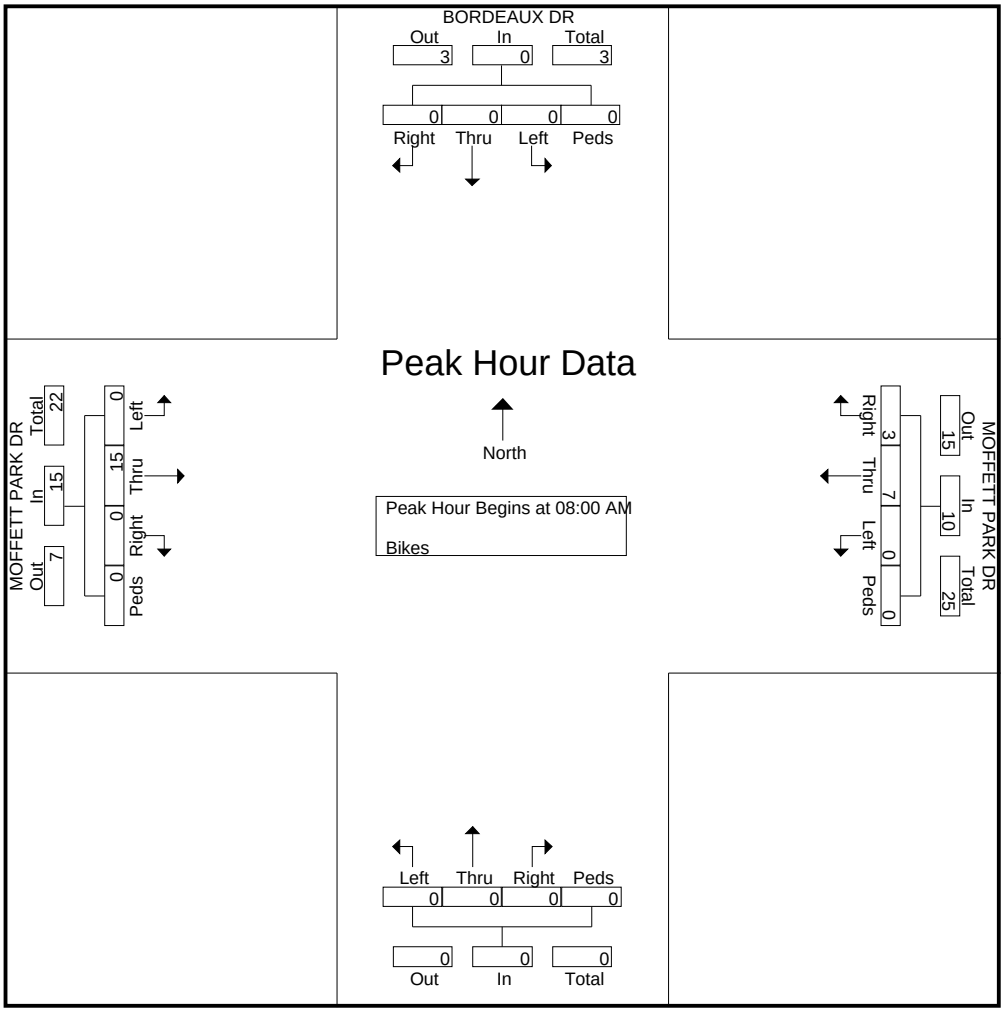

Traffic Data Service

Campbell, CA
(408) 377-2988
tdsbay@cs.com

File Name : 14AM FINAL
Site Code : 00000014
Start Date : 2/12/2013
Page No : 1

Groups Printed- Vehicles

	BORDEAUX DR Southbound					MOFFETT PARK DR Westbound					Northbound					MOFFETT PARK DR Eastbound					
Start Time	Right	Thru	Left	Peds	App. Total	Right	Thru	Left	Peds	App. Total	Right	Thru	Left	Peds	App. Total	Right	Thru	Left	Peds	App. Total	Int. Total
07:00 AM	4	0	2	0	6	0	17	0	0	17	0	0	0	0	0	0	64	30	0	94	117
07:15 AM	4	0	2	0	6	3	14	0	0	17	0	0	0	0	0	0	77	38	0	115	138
07:30 AM	11	0	7	0	18	3	25	0	0	28	0	0	0	0	0	0	76	48	0	124	170
07:45 AM	6	0	1	0	7	5	33	0	0	38	0	0	0	0	0	0	123	44	0	167	212
Total	25	0	12	0	37	11	89	0	0	100	0	0	0	0	0	0	340	160	0	500	637
08:00 AM	2	0	2	0	4	4	30	0	0	34	0	0	0	0	0	0	113	54	0	167	205
08:15 AM	5	0	0	0	5	4	30	0	0	34	0	0	0	0	0	0	112	61	0	173	212
08:30 AM	7	0	2	0	9	4	38	0	0	42	0	0	0	0	0	0	123	53	0	176	227
08:45 AM	5	0	1	0	6	3	47	0	0	50	0	0	0	0	0	0	131	58	0	189	245
Total	19	0	5	0	24	15	145	0	0	160	0	0	0	0	0	0	479	226	0	705	889
Grand Total	44	0	17	0	61	26	234	0	0	260	0	0	0	0	0	0	819	386	0	1205	1526
Apprch %	72.1	0	27.9	0		10	90	0	0		0	0	0	0		0	68	32	0		
Total %	2.9	0	1.1	0	4	1.7	15.3	0	0	17	0	0	0	0	0	0	53.7	25.3	0	79	

	BORDEAUX DR Southbound					MOFFETT PARK DR Westbound					Northbound					MOFFETT PARK DR Eastbound					
Start Time	Right	Thru	Left	Peds	App. Total	Right	Thru	Left	Peds	App. Total	Right	Thru	Left	Peds	App. Total	Right	Thru	Left	Peds	App. Total	Int. Total
Peak Hour Analysis From 07:00 AM to 08:45 AM - Peak 1 of 1																					
Peak Hour for Entire Intersection Begins at 08:00 AM																					
08:00 AM	2	0	**2**	0	4	**4**	30	0	0	34	0	0	0	0	0	0	113	54	0	167	205
08:15 AM	5	0	0	0	5	4	30	0	0	34	0	0	0	0	0	0	112	**61**	0	173	212
08:30 AM	**7**	0	2	0	**9**	4	38	0	0	42	0	0	0	0	0	0	123	53	0	176	227
08:45 AM	5	0	1	0	6	3	**47**	0	0	**50**	0	0	0	0	0	0	**131**	58	0	**189**	**245**
Total Volume	19	0	5	0	24	15	145	0	0	160	0	0	0	0	0	0	479	226	0	705	889
% App. Total	79.2	0	20.8	0		9.4	90.6	0	0		0	0	0	0		0	67.9	32.1	0		
PHF	.679	.000	.625	.000	.667	.938	.771	.000	.000	.800	.000	.000	.000	.000	.000	.000	.914	.926	.000	.933	.907

Traffic Data Service

Campbell, CA
(408) 377-2988
tdsbay@cs.com

File Name : 14AM FINAL
Site Code : 00000014
Start Date : 2/12/2013
Page No : 2

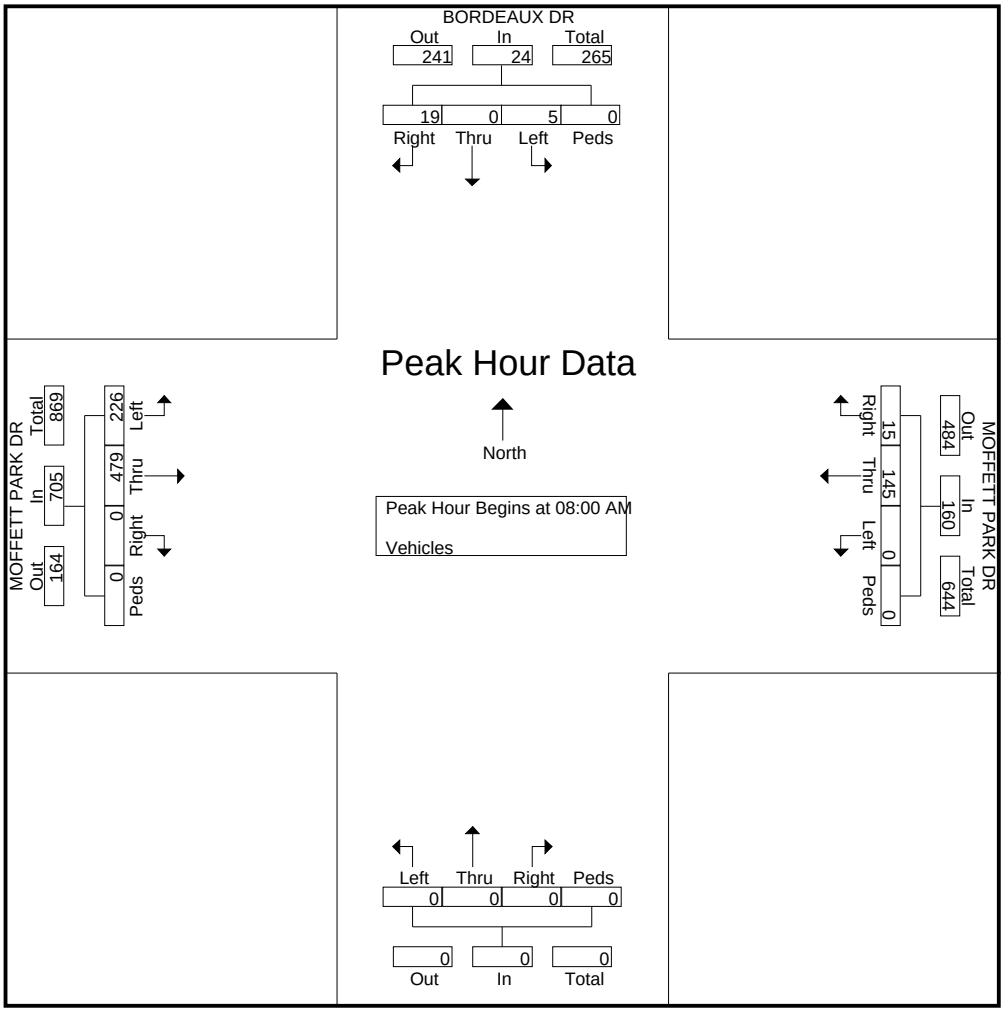

Traffic Data Service

Campbell, CA
(408) 377-2988
tdsbay@cs.com

File Name : 13PM FINAL
Site Code : 00000013
Start Date : 2/13/2013
Page No : 1

Groups Printed- Bikes

	MATHILDA AVE Southbound					CALIFORNIA AVE Westbound					MATHILDA AVE Northbound					CALIFORNIA AVE Eastbound					
Start Time	Right	Thru	Left	Peds	App. Total	Right	Thru	Left	Peds	App. Total	Right	Thru	Left	Peds	App. Total	Right	Thru	Left	Peds	App. Total	Int. Total
04:30 PM	0	1	0	0	1	0	0	0	0	0	0	0	0	0	0	0	0	0	0	0	1
04:45 PM	0	0	1	0	1	0	0	0	0	0	0	0	0	0	0	0	1	0	0	1	2
Total	0	1	1	0	2	0	0	0	0	0	0	0	0	0	0	0	1	0	0	1	3
05:00 PM	0	0	1	0	1	0	0	0	0	0	0	0	0	0	0	0	0	0	0	0	1
05:15 PM	0	1	0	0	1	0	2	0	0	2	0	0	0	0	0	0	0	0	0	0	3
05:30 PM	2	0	0	0	2	0	1	0	0	1	0	0	1	0	1	0	0	0	0	0	4
05:45 PM	0	1	1	0	2	0	0	0	0	0	0	0	0	0	0	2	1	0	0	3	5
Total	2	2	2	0	6	0	3	0	0	3	0	0	1	0	1	2	1	0	0	3	13
06:00 PM	1	0	0	0	1	0	0	0	0	0	0	1	0	0	1	0	0	0	0	0	2
06:15 PM	0	0	0	0	0	0	0	0	0	0	0	0	0	0	0	0	0	0	0	0	0
Grand Total	3	3	3	0	9	0	3	0	0	3	0	1	1	0	2	2	2	0	0	4	18
Apprch %	33.3	33.3	33.3	0		0	100	0	0		0	50	50	0		50	50	0	0		
Total %	16.7	16.7	16.7	0	50	0	16.7	0	0	16.7	0	5.6	5.6	0	11.1	11.1	11.1	0	0	22.2	

	MATHILDA AVE Southbound					CALIFORNIA AVE Westbound					MATHILDA AVE Northbound					CALIFORNIA AVE Eastbound					
Start Time	Right	Thru	Left	Peds	App. Total	Right	Thru	Left	Peds	App. Total	Right	Thru	Left	Peds	App. Total	Right	Thru	Left	Peds	App. Total	Int. Total
Peak Hour Analysis From 04:30 PM to 06:15 PM - Peak 1 of 1																					
Peak Hour for Entire Intersection Begins at 05:15 PM																					
05:15 PM	0	**1**	0	0	1	0	**2**	0	0	**2**	0	0	0	0	0	0	0	0	0	0	3
05:30 PM	**2**	0	0	0	**2**	0	1	0	0	1	0	0	**1**	0	**1**	0	0	0	0	0	4
05:45 PM	0	1	**1**	0	2	0	0	0	0	0	0	0	0	0	0	**2**	**1**	0	0	**3**	**5**
06:00 PM	1	0	0	0	1	0	0	0	0	0	0	**1**	0	0	1	0	0	0	0	0	2
Total Volume	3	2	1	0	6	0	3	0	0	3	0	1	1	0	2	2	1	0	0	3	14
% App. Total	50	33.3	16.7	0		0	100	0	0		0	50	50	0		66.7	33.3	0	0		
PHF	.375	.500	.250	.000	.750	.000	.375	.000	.000	.375	.000	.250	.250	.000	.500	.250	.250	.000	.000	.250	.700

Traffic Data Service

Campbell, CA
(408) 377-2988
tdsbay@cs.com

File Name : 13PM FINAL
Site Code : 00000013
Start Date : 2/13/2013
Page No : 2

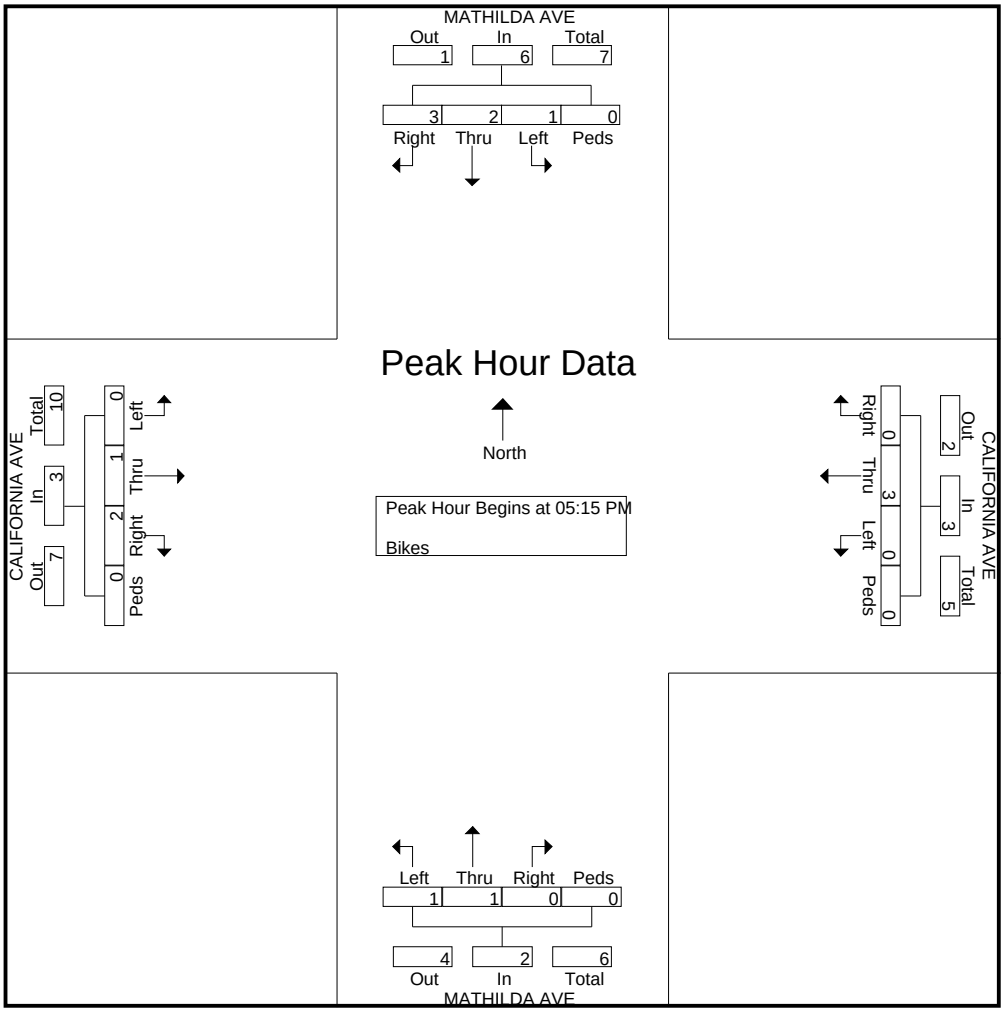

Traffic Data Service

Campbell, CA
(408) 377-2988
tdsbay@cs.com

File Name : 13PM FINAL
Site Code : 00000013
Start Date : 2/13/2013
Page No : 1

Groups Printed- Vehicles

	MATHILDA AVE Southbound					CALIFORNIA AVE Westbound					MATHILDA AVE Northbound					CALIFORNIA AVE Eastbound					
Start Time	Right	Thru	Left	Peds	App. Total	Right	Thru	Left	Peds	App. Total	Right	Thru	Left	Peds	App. Total	Right	Thru	Left	Peds	App. Total	Int. Total
04:30 PM	77	497	42	3	619	20	8	6	0	34	51	232	17	4	304	42	4	11	3	60	1017
04:45 PM	78	473	39	0	590	24	7	7	1	39	28	209	13	1	251	46	9	16	1	72	952
Total	155	970	81	3	1209	44	15	13	1	73	79	441	30	5	555	88	13	27	4	132	1969
05:00 PM	102	610	33	2	747	27	5	6	0	38	47	197	17	1	262	56	11	32	5	104	1151
05:15 PM	122	645	30	1	798	30	5	8	6	49	67	253	10	7	337	58	21	31	0	110	1294
05:30 PM	94	695	47	0	836	25	5	15	4	49	50	217	16	4	287	62	18	22	6	108	1280
05:45 PM	88	634	53	2	777	26	13	9	3	51	42	236	22	3	303	66	12	19	1	98	1229
Total	406	2584	163	5	3158	108	28	38	13	187	206	903	65	15	1189	242	62	104	12	420	4954
06:00 PM	85	720	49	0	854	20	8	9	1	38	57	243	12	2	314	40	7	27	1	75	1281
06:15 PM	85	695	48	2	830	25	13	7	0	45	57	237	24	1	319	58	15	18	1	92	1286
Grand Total	731	4969	341	10	6051	197	64	67	15	343	399	1824	131	23	2377	428	97	176	18	719	9490
Apprch %	12.1	82.1	5.6	0.2		57.4	18.7	19.5	4.4		16.8	76.7	5.5	1		59.5	13.5	24.5	2.5		
Total %	7.7	52.4	3.6	0.1	63.8	2.1	0.7	0.7	0.2	3.6	4.2	19.2	1.4	0.2	25	4.5	1	1.9	0.2	7.6	

	MATHILDA AVE Southbound					CALIFORNIA AVE Westbound					MATHILDA AVE Northbound					CALIFORNIA AVE Eastbound					
Start Time	Right	Thru	Left	Peds	App. Total	Right	Thru	Left	Peds	App. Total	Right	Thru	Left	Peds	App. Total	Right	Thru	Left	Peds	App. Total	Int. Total
Peak Hour Analysis From 04:30 PM to 06:15 PM - Peak 1 of 1																					
Peak Hour for Entire Intersection Begins at 05:15 PM																					
05:15 PM	**122**	645	30	1	798	**30**	5	8	**6**	49	**67**	**253**	10	**7**	**337**	58	**21**	**31**	0	**110**	**1294**
05:30 PM	94	695	47	0	836	25	5	**15**	4	49	50	217	16	4	287	62	18	22	**6**	108	1280
05:45 PM	88	634	**53**	**2**	777	26	**13**	9	3	**51**	42	236	**22**	3	303	**66**	12	19	1	98	1229
06:00 PM	85	**720**	49	0	**854**	20	8	9	1	38	57	243	12	2	314	40	7	27	1	75	1281
Total Volume	389	2694	179	3	3265	101	31	41	14	187	216	949	60	16	1241	226	58	99	8	391	5084
% App. Total																					
PHF	.797	.935	.844	.375	.956	.842	.596	.683	.583	.917	.806	.938	.682	.571	.921	.856	.690	.798	.333	.889	.982

Traffic Data Service

Campbell, CA
(408) 377-2988
tdsbay@cs.com

File Name : 13PM FINAL
Site Code : 00000013
Start Date : 2/13/2013
Page No : 2

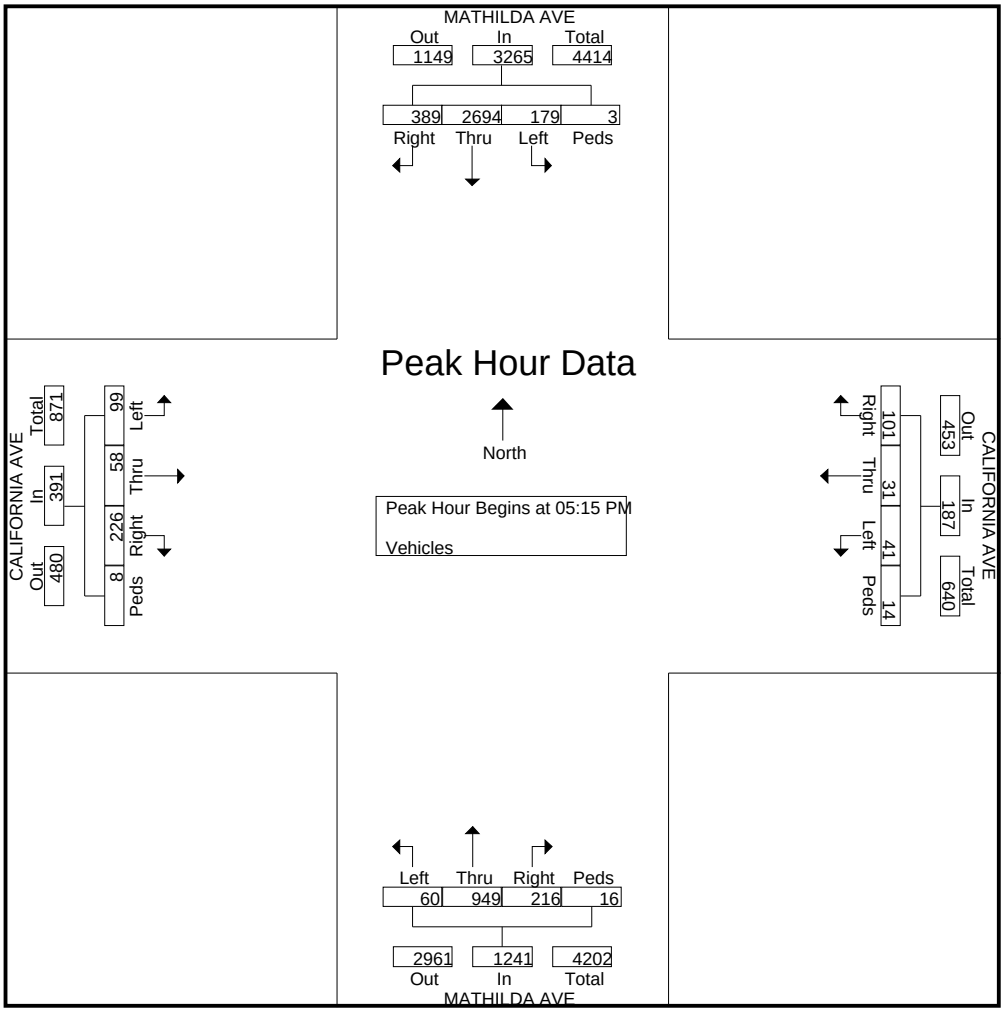

Traffic Data Service

Campbell, CA
(408) 377-2988
tdsbay@cs.com

File Name : 13AM FINAL
Site Code : 00000013
Start Date : 2/13/2013
Page No : 1

Groups Printed- Bikes

	MATHILDA AVE Southbound					CALIFORNIA AVE Westbound					MATHILDA AVE Northbound					CALIFORNIA AVE Eastbound					
Start Time	Right	Thru	Left	Peds	App. Total	Right	Thru	Left	Peds	App. Total	Right	Thru	Left	Peds	App. Total	Right	Thru	Left	Peds	App. Total	Int. Total
07:00 AM	0	0	0	0	0	0	1	0	0	1	0	1	0	0	1	0	0	0	0	0	2
07:15 AM	0	0	0	0	0	0	0	0	0	0	0	0	0	0	0	0	1	0	0	1	1
07:30 AM	0	0	0	0	0	0	0	0	0	0	0	0	0	0	0	0	1	0	0	1	1
07:45 AM	0	0	0	0	0	0	0	0	0	0	0	0	0	0	0	0	0	0	0	0	0
Total	0	0	0	0	0	0	1	0	0	1	0	1	0	0	1	0	2	0	0	2	4
08:00 AM	0	0	0	0	0	0	0	0	0	0	0	0	0	0	0	0	1	0	0	1	1
08:15 AM	0	0	0	0	0	0	0	0	0	0	0	0	0	0	0	0	3	0	0	3	3
08:30 AM	0	0	0	0	0	0	0	0	0	0	0	0	0	0	0	0	0	0	0	0	0
08:45 AM	0	0	0	0	0	2	1	0	0	3	0	0	0	0	0	0	0	0	0	0	3
Total	0	0	0	0	0	2	1	0	0	3	0	0	0	0	0	0	4	0	0	4	7
Grand Total	0	0	0	0	0	2	2	0	0	4	0	1	0	0	1	0	6	0	0	6	11
Apprch %	0	0	0	0		50	50	0	0		0	100	0	0		0	100	0	0		
Total %	0	0	0	0	0	18.2	18.2	0	0	36.4	0	9.1	0	0	9.1	0	54.5	0	0	54.5	

	MATHILDA AVE Southbound					CALIFORNIA AVE Westbound					MATHILDA AVE Northbound					CALIFORNIA AVE Eastbound					
Start Time	Right	Thru	Left	Peds	App. Total	Right	Thru	Left	Peds	App. Total	Right	Thru	Left	Peds	App. Total	Right	Thru	Left	Peds	App. Total	Int. Total
Peak Hour Analysis From 07:00 AM to 08:45 AM - Peak 1 of 1																					
Peak Hour for Entire Intersection Begins at 08:00 AM																					
08:00 AM	0	0	0	0	0	0	0	0	0	0	0	0	0	0	0	0	1	0	0	1	1
08:15 AM	0	0	0	0	0	0	0	0	0	0	0	0	0	0	0	0	**3**	0	0	**3**	**3**
08:30 AM	0	0	0	0	0	0	0	0	0	0	0	0	0	0	0	0	0	0	0	0	0
08:45 AM	0	0	0	0	0	**2**	**1**	0	0	**3**	0	0	0	0	0	0	0	0	0	0	3
Total Volume	0	0	0	0	0	2	1	0	0	3	0	0	0	0	0	0	4	0	0	4	7
% App. Total	0	0	0	0		66.7	33.3	0	0		0	0	0	0		0	100	0	0		
PHF	.000	.000	.000	.000	.000	.250	.250	.000	.000	.250	.000	.000	.000	.000	.000	.000	.333	.000	.000	.333	.583

Traffic Data Service

Campbell, CA
(408) 377-2988
tdsbay@cs.com

File Name : 13AM FINAL
Site Code : 00000013
Start Date : 2/13/2013
Page No : 2

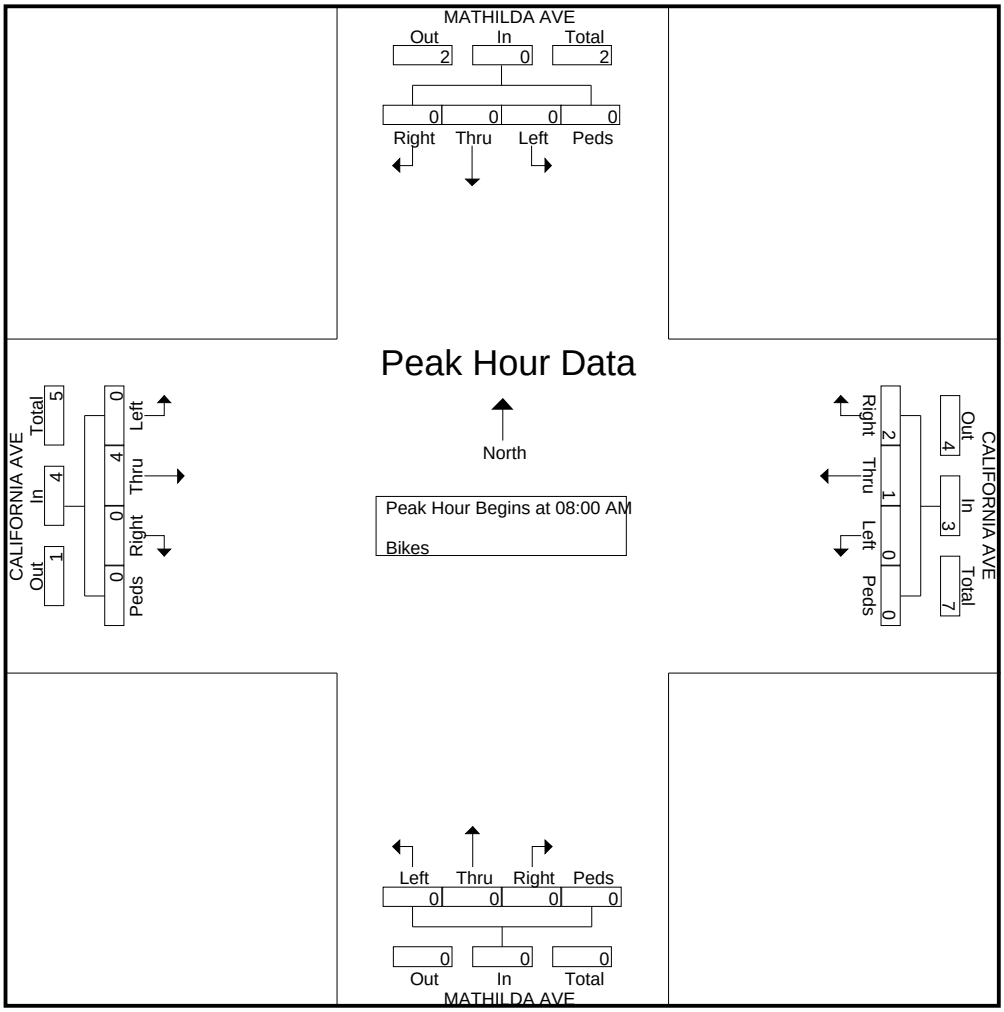

Traffic Data Service

Campbell, CA
(408) 377-2988
tdsbay@cs.com

File Name : 13AM FINAL
Site Code : 00000013
Start Date : 2/13/2013
Page No : 1

Groups Printed- Vehicles

	MATHILDA AVE Southbound					CALIFORNIA AVE Westbound					MATHILDA AVE Northbound					CALIFORNIA AVE Eastbound					
Start Time	Right	Thru	Left	Peds	App. Total	Right	Thru	Left	Peds	App. Total	Right	Thru	Left	Peds	App. Total	Right	Thru	Left	Peds	App. Total	Int. Total
07:00 AM	28	140	11	1	180	31	12	5	3	51	11	172	9	0	192	5	5	7	2	19	442
07:15 AM	25	151	10	0	186	27	5	8	4	44	18	221	7	0	246	13	3	14	0	30	506
07:30 AM	35	219	14	3	271	31	9	6	1	47	36	290	7	2	335	18	4	15	0	37	690
07:45 AM	34	301	14	2	351	36	16	18	0	70	46	321	10	1	378	22	7	7	2	38	837
Total	122	811	49	6	988	125	42	37	8	212	111	1004	33	3	1151	58	19	43	4	124	2475
08:00 AM	68	310	13	0	391	28	12	18	1	59	44	461	21	1	527	17	4	19	0	40	1017
08:15 AM	44	236	19	0	299	38	18	7	1	64	55	494	16	0	565	12	8	26	0	46	974
08:30 AM	32	193	6	3	234	29	20	10	3	62	48	521	24	1	594	23	3	19	0	45	935
08:45 AM	55	311	16	1	383	36	16	16	5	73	54	579	32	1	666	32	8	12	3	55	1177
Total	199	1050	54	4	1307	131	66	51	10	258	201	2055	93	3	2352	84	23	76	3	186	4103
Grand Total	321	1861	103	10	2295	256	108	88	18	470	312	3059	126	6	3503	142	42	119	7	310	6578
Apprch %	14	81.1	4.5	0.4		54.5	23	18.7	3.8		8.9	87.3	3.6	0.2		45.8	13.5	38.4	2.3		
Total %	4.9	28.3	1.6	0.2	34.9	3.9	1.6	1.3	0.3	7.1	4.7	46.5	1.9	0.1	53.3	2.2	0.6	1.8	0.1	4.7	

	MATHILDA AVE Southbound					CALIFORNIA AVE Westbound					MATHILDA AVE Northbound					CALIFORNIA AVE Eastbound					
Start Time	Right	Thru	Left	Peds	App. Total	Right	Thru	Left	Peds	App. Total	Right	Thru	Left	Peds	App. Total	Right	Thru	Left	Peds	App. Total	Int. Total
Peak Hour Analysis From 07:00 AM to 08:45 AM - Peak 1 of 1																					
Peak Hour for Entire Intersection Begins at 08:00 AM																					
08:00 AM	**68**	310	13	0	**391**	28	12	**18**	1	59	44	461	21	**1**	527	17	4	19	0	40	1017
08:15 AM	44	236	**19**	0	299	**38**	18	7	1	64	**55**	494	16	0	565	12	**8**	**26**	0	46	974
08:30 AM	32	193	6	**3**	234	29	**20**	10	3	62	48	521	24	1	594	23	3	19	0	45	935
08:45 AM	55	**311**	16	1	383	36	16	16	**5**	**73**	54	**579**	**32**	1	**666**	**32**	8	12	**3**	**55**	**1177**
Total Volume	199	1050	54	4	1307	131	66	51	10	258	201	2055	93	3	2352	84	23	76	3	186	4103
% App. Total																					
PHF	.732	.844	.711	.333	.836	.862	.825	.708	.500	.884	.914	.887	.727	.750	.883	.656	.719	.731	.250	.845	.871

Traffic Data Service

Campbell, CA
(408) 377-2988
tdsbay@cs.com

File Name : 13AM FINAL
Site Code : 00000013
Start Date : 2/13/2013
Page No : 2

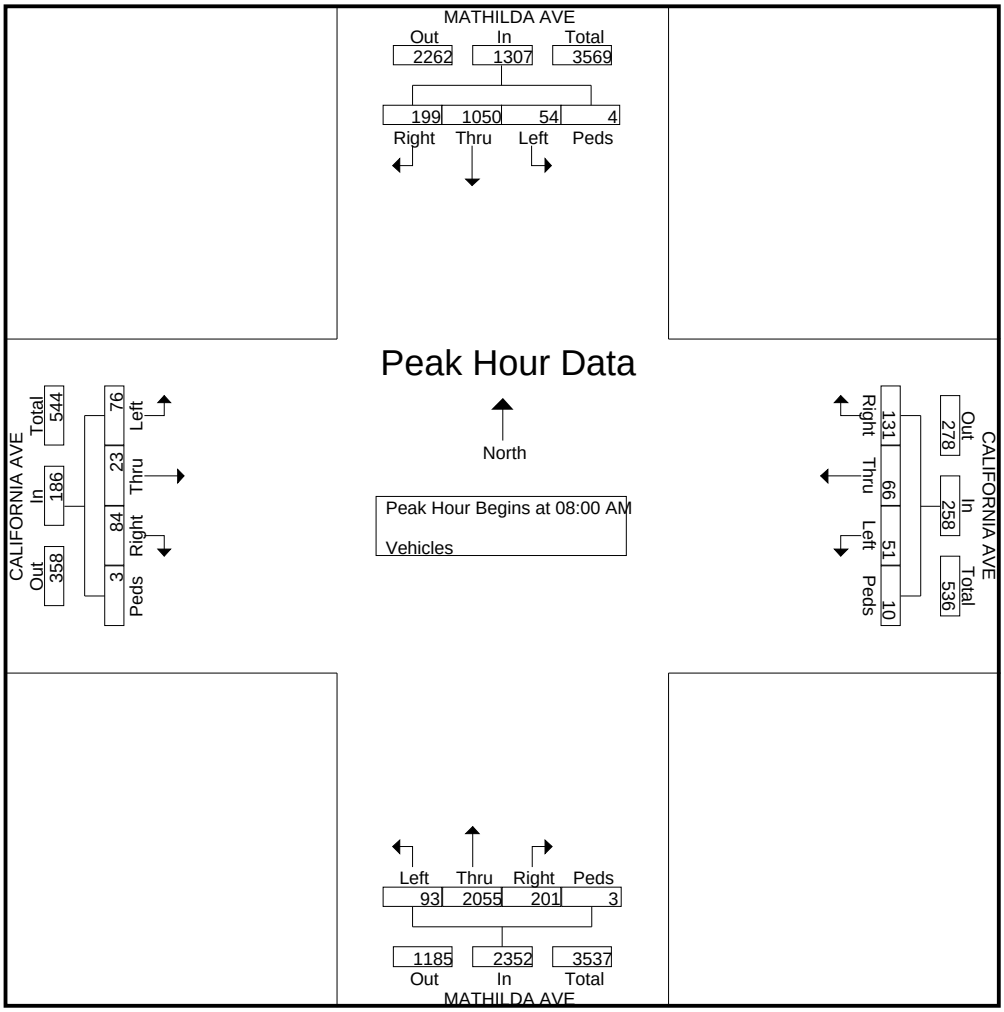

Traffic Data Service

Campbell, CA
(408) 377-2988
tdsbay@cs.com

File Name : 12PM FINAL
Site Code : 00000012
Start Date : 2/13/2013
Page No : 1

Groups Printed- Bikes

	MATHILDA AVE Southbound					INDIO WY Westbound					MATHILDA AVE Northbound					INDIO WY Eastbound					
Start Time	Right	Thru	Left	Peds	App. Total	Right	Thru	Left	Peds	App. Total	Right	Thru	Left	Peds	App. Total	Right	Thru	Left	Peds	App. Total	Int. Total
04:30 PM	0	1	0	0	1	0	0	0	0	0	0	0	0	0	0	0	0	0	0	0	1
04:45 PM	0	0	0	0	0	0	0	0	0	0	0	1	0	0	1	0	0	0	0	0	1
Total	0	1	0	0	1	0	0	0	0	0	0	1	0	0	1	0	0	0	0	0	2
05:00 PM	0	1	0	0	1	0	0	0	0	0	0	0	0	0	0	0	0	0	0	0	1
05:15 PM	0	0	0	0	0	0	0	0	0	0	0	0	0	0	0	0	0	0	0	0	0
05:30 PM	0	0	0	0	0	0	0	0	0	0	0	0	0	0	0	0	0	0	0	0	0
05:45 PM	0	1	0	0	1	0	0	0	0	0	0	0	0	0	0	0	0	0	0	0	1
Total	0	2	0	0	2	0	0	0	0	0	0	0	0	0	0	0	0	0	0	0	2
06:00 PM	0	0	0	0	0	0	0	0	0	0	0	0	0	0	0	0	0	0	0	0	0
06:15 PM	0	0	0	0	0	0	0	0	0	0	0	0	0	0	0	0	0	0	0	0	0
Grand Total	0	3	0	0	3	0	0	0	0	0	0	1	0	0	1	0	0	0	0	0	4
Apprch %	0	100	0	0		0	0	0	0		0	100	0	0		0	0	0	0		
Total %	0	75	0	0	75	0	0	0	0	0	0	25	0	0	25	0	0	0	0	0	

	MATHILDA AVE Southbound					INDIO WY Westbound					MATHILDA AVE Northbound					INDIO WY Eastbound					
Start Time	Right	Thru	Left	Peds	App. Total	Right	Thru	Left	Peds	App. Total	Right	Thru	Left	Peds	App. Total	Right	Thru	Left	Peds	App. Total	Int. Total
Peak Hour Analysis From 04:30 PM to 06:15 PM - Peak 1 of 1																					
Peak Hour for Entire Intersection Begins at 04:30 PM																					
04:30 PM	0	**1**	0	0	**1**	0	0	0	0	0	0	0	0	0	0	0	0	0	0	0	**1**
04:45 PM	0	0	0	0	0	0	0	0	0	0	0	**1**	0	0	**1**	0	0	0	0	0	1
05:00 PM	0	1	0	0	1	0	0	0	0	0	0	0	0	0	0	0	0	0	0	0	1
05:15 PM	0	0	0	0	0	0	0	0	0	0	0	0	0	0	0	0	0	0	0	0	0
Total Volume	0	2	0	0	2	0	0	0	0	0	0	1	0	0	1	0	0	0	0	0	3
% App. Total	0	100	0	0		0	0	0	0		0	100	0	0		0	0	0	0		
PHF	.000	.500	.000	.000	.500	.000	.000	.000	.000	.000	.000	.250	.000	.000	.250	.000	.000	.000	.000	.000	.750

Traffic Data Service

Campbell, CA
(408) 377-2988
tdsbay@cs.com

File Name : 12PM FINAL
Site Code : 00000012
Start Date : 2/13/2013
Page No : 2

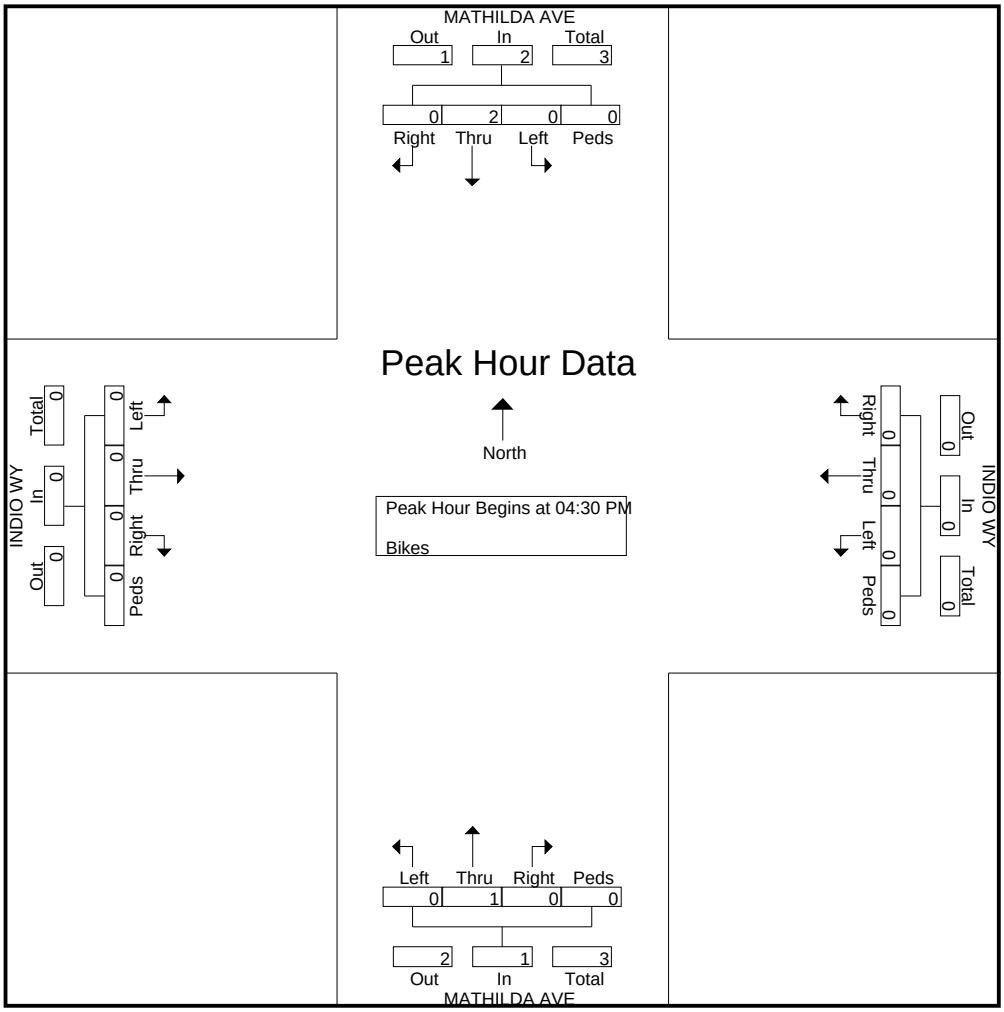

Traffic Data Service

Campbell, CA
(408) 377-2988
tdsbay@cs.com

File Name : 12PM FINAL
Site Code : 00000012
Start Date : 2/13/2013
Page No : 1

Groups Printed- Vehicles

	MATHILDA AVE Southbound					INDIO WY Westbound					MATHILDA AVE Northbound					INDIO WY Eastbound					
Start Time	Right	Thru	Left	Peds	App. Total	Right	Thru	Left	Peds	App. Total	Right	Thru	Left	Peds	App. Total	Right	Thru	Left	Peds	App. Total	Int. Total
04:30 PM	10	547	8	0	565	19	0	7	0	26	18	238	12	0	268	30	0	11	0	41	900
04:45 PM	17	578	7	1	603	10	0	5	0	15	18	218	18	0	254	30	0	12	0	42	914
Total	27	1125	15	1	1168	29	0	12	0	41	36	456	30	0	522	60	0	23	0	83	1814
05:00 PM	15	668	9	0	692	4	1	9	0	14	13	247	11	0	271	60	1	10	0	71	1048
05:15 PM	14	718	3	1	736	9	2	7	0	18	20	253	9	0	282	62	0	23	0	85	1121
05:30 PM	16	763	9	0	788	18	0	7	0	25	24	203	15	0	242	73	0	6	0	79	1134
05:45 PM	23	692	19	0	734	8	0	8	0	16	31	222	15	0	268	66	0	14	0	80	1098
Total	68	2841	40	1	2950	39	3	31	0	73	88	925	50	0	1063	261	1	53	0	315	4401
06:00 PM	35	748	8	0	791	15	2	22	0	39	28	236	19	0	283	95	0	15	0	110	1223
06:15 PM	42	718	12	0	772	12	0	13	0	25	26	231	13	0	270	83	0	12	0	95	1162
Grand Total	172	5432	75	2	5681	95	5	78	0	178	178	1848	112	0	2138	499	1	103	0	603	8600
Apprch %	3	95.6	1.3	0		53.4	2.8	43.8	0		8.3	86.4	5.2	0		82.8	0.2	17.1	0		
Total %	2	63.2	0.9	0	66.1	1.1	0.1	0.9	0	2.1	2.1	21.5	1.3	0	24.9	5.8	0	1.2	0	7	

	MATHILDA AVE Southbound					INDIO WY Westbound					MATHILDA AVE Northbound					INDIO WY Eastbound					
Start Time	Right	Thru	Left	Peds	App. Total	Right	Thru	Left	Peds	App. Total	Right	Thru	Left	Peds	App. Total	Right	Thru	Left	Peds	App. Total	Int. Total
Peak Hour Analysis From 04:30 PM to 06:15 PM - Peak 1 of 1																					
Peak Hour for Entire Intersection Begins at 05:30 PM																					
05:30 PM	16	**763**	9	0	788	**18**	0	7	0	25	24	203	15	0	242	73	0	6	0	79	1134
05:45 PM	23	692	**19**	0	734	8	0	8	0	16	**31**	222	15	0	268	66	0	14	0	80	1098
06:00 PM	35	748	8	0	**791**	15	**2**	**22**	0	**39**	28	**236**	**19**	0	**283**	**95**	0	**15**	0	**110**	**1223**
06:15 PM	**42**	718	12	0	772	12	0	13	0	25	26	231	13	0	270	83	0	12	0	95	1162
Total Volume	116	2921	48	0	3085	53	2	50	0	105	109	892	62	0	1063	317	0	47	0	364	4617
% App. Total	3.8	94.7	1.6	0		50.5	1.9	47.6	0		10.3	83.9	5.8	0		87.1	0	12.9	0		
PHF	.690	.957	.632	.000	.975	.736	.250	.568	.000	.673	.879	.945	.816	.000	.939	.834	.000	.783	.000	.827	.944

Traffic Data Service

Campbell, CA
(408) 377-2988
tdsbay@cs.com

File Name : 12PM FINAL
Site Code : 00000012
Start Date : 2/13/2013
Page No : 2

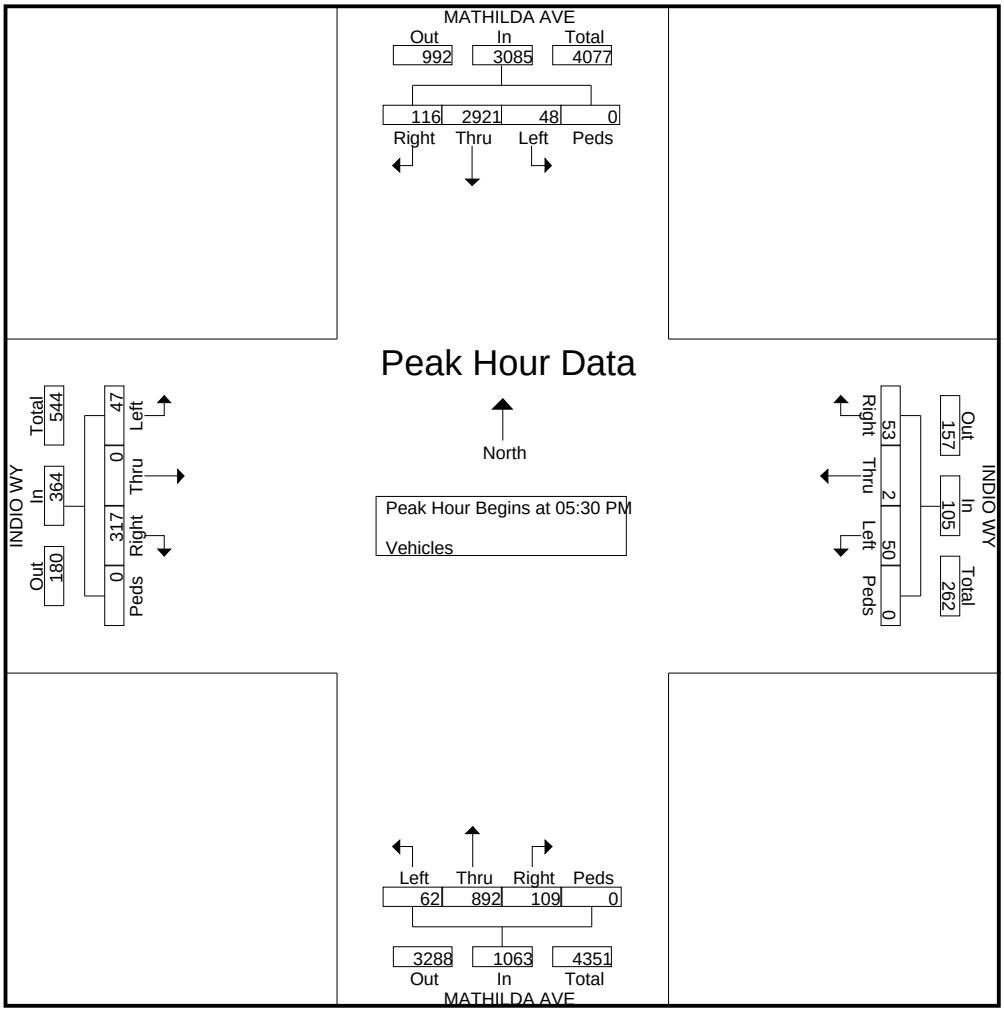

Traffic Data Service

Campbell, CA
(408) 377-2988
tdsbay@cs.com

File Name : 12AM FINAL
Site Code : 00000012
Start Date : 2/13/2013
Page No : 1

Groups Printed- Bikes

	MATHILDA AVE Southbound					INDIO WY Westbound					MATHILDA AVE Northbound					INDIO WY Eastbound					
Start Time	Right	Thru	Left	Peds	App. Total	Right	Thru	Left	Peds	App. Total	Right	Thru	Left	Peds	App. Total	Right	Thru	Left	Peds	App. Total	Int. Total
07:00 AM	0	1	0	0	1	0	0	0	0	0	0	0	0	0	0	0	0	0	0	0	1
07:15 AM	0	0	0	0	0	0	0	0	0	0	0	0	0	0	0	0	0	0	0	0	0
07:30 AM	0	0	0	0	0	0	0	0	0	0	0	0	0	0	0	0	0	0	0	0	0
07:45 AM	0	0	0	0	0	0	0	0	0	0	0	0	0	0	0	0	0	0	0	0	0
Total	0	1	0	0	1	0	0	0	0	0	0	0	0	0	0	0	0	0	0	0	1
08:00 AM	0	0	0	0	0	0	0	0	0	0	0	0	0	0	0	0	0	0	0	0	0
08:15 AM	0	0	0	0	0	0	0	0	0	0	0	0	0	0	0	0	0	0	0	0	0
08:30 AM	0	0	0	0	0	0	0	0	0	0	0	0	0	0	0	0	0	0	0	0	0
08:45 AM	0	0	0	0	0	0	0	0	0	0	0	0	0	0	0	0	0	0	0	0	0
Total	0	0	0	0	0	0	0	0	0	0	0	0	0	0	0	0	0	0	0	0	0
Grand Total	0	1	0	0	1	0	0	0	0	0	0	0	0	0	0	0	0	0	0	0	1
Apprch %	0	100	0	0		0	0	0	0		0	0	0	0		0	0	0	0		
Total %	0	100	0	0	100	0	0	0	0	0	0	0	0	0	0	0	0	0	0	0	

	MATHILDA AVE Southbound					INDIO WY Westbound					MATHILDA AVE Northbound					INDIO WY Eastbound					
Start Time	Right	Thru	Left	Peds	App. Total	Right	Thru	Left	Peds	App. Total	Right	Thru	Left	Peds	App. Total	Right	Thru	Left	Peds	App. Total	Int. Total
Peak Hour Analysis From 07:00 AM to 08:45 AM - Peak 1 of 1																					
Peak Hour for Entire Intersection Begins at 07:00 AM																					
07:00 AM	0	**1**	0	0	**1**	0	0	0	0	0	0	0	0	0	0	0	0	0	0	0	**1**
07:15 AM	0	0	0	0	0	0	0	0	0	0	0	0	0	0	0	0	0	0	0	0	0
07:30 AM	0	0	0	0	0	0	0	0	0	0	0	0	0	0	0	0	0	0	0	0	0
07:45 AM	0	0	0	0	0	0	0	0	0	0	0	0	0	0	0	0	0	0	0	0	0
Total Volume	0	1	0	0	1	0	0	0	0	0	0	0	0	0	0	0	0	0	0	0	1
% App. Total	0	100	0	0		0	0	0	0		0	0	0	0		0	0	0	0		
PHF	.000	.250	.000	.000	.250	.000	.000	.000	.000	.000	.000	.000	.000	.000	.000	.000	.000	.000	.000	.000	.250

Traffic Data Service

Campbell, CA
(408) 377-2988
tdsbay@cs.com

File Name : 12AM FINAL
Site Code : 00000012
Start Date : 2/13/2013
Page No : 2

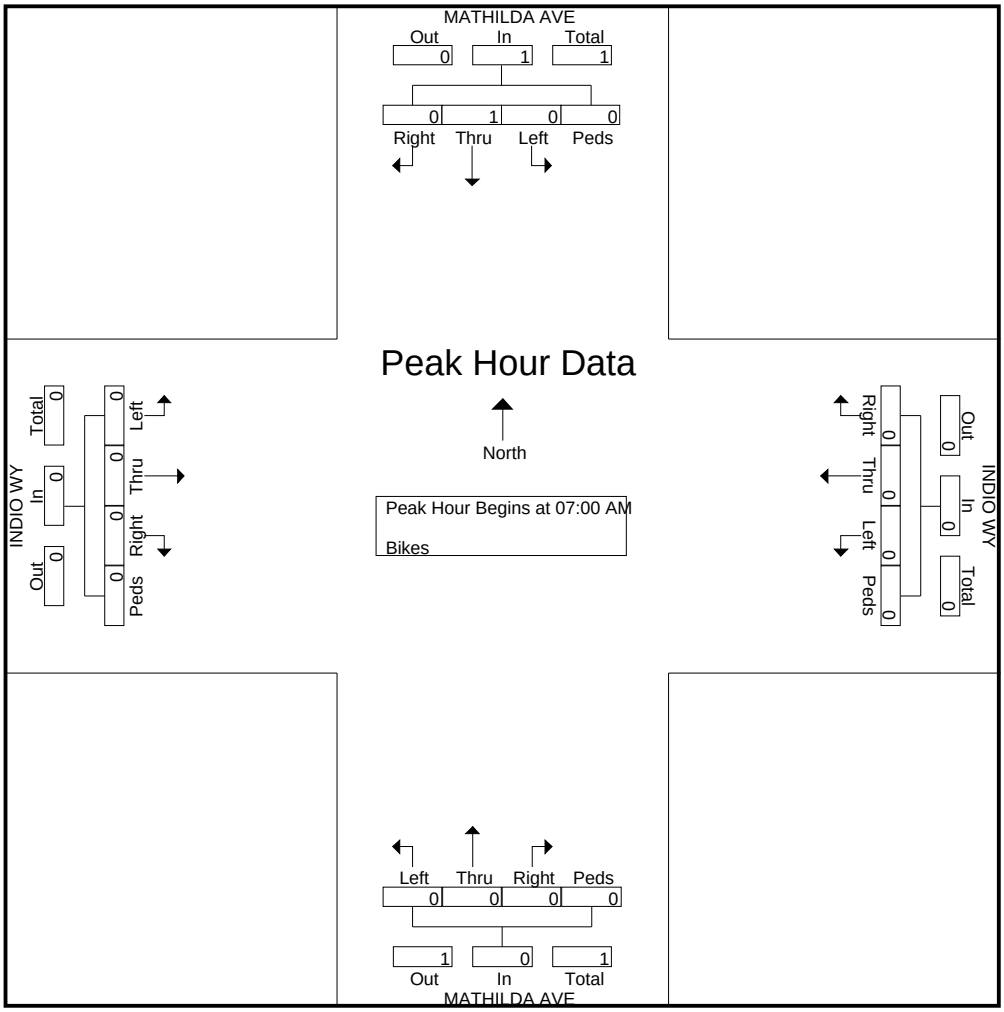

Traffic Data Service

Campbell, CA
(408) 377-2988
tdsbay@cs.com

File Name : 12AM FINAL
Site Code : 00000012
Start Date : 2/13/2013
Page No : 1

Groups Printed- Vehicles

	MATHILDA AVE Southbound					INDIO WY Westbound					MATHILDA AVE Northbound					INDIO WY Eastbound					
Start Time	Right	Thru	Left	Peds	App. Total	Right	Thru	Left	Peds	App. Total	Right	Thru	Left	Peds	App. Total	Right	Thru	Left	Peds	App. Total	Int. Total
07:00 AM	8	152	5	2	167	29	2	5	0	36	15	183	16	0	214	21	2	8	0	31	448
07:15 AM	15	145	6	0	166	25	1	6	0	32	19	227	15	0	261	32	5	6	0	43	502
07:30 AM	12	223	8	0	243	63	3	8	0	74	21	306	12	0	339	26	8	9	0	43	699
07:45 AM	23	256	10	2	291	45	5	9	0	59	33	324	15	0	372	68	6	5	0	79	801
Total	58	776	29	4	867	162	11	28	0	201	88	1040	58	0	1186	147	21	28	0	196	2450
08:00 AM	25	316	15	0	356	25	8	10	0	43	42	435	22	0	499	63	18	6	0	87	985
08:15 AM	26	220	16	0	262	63	6	22	0	91	55	476	28	0	559	52	5	9	0	66	978
08:30 AM	22	193	18	0	233	25	9	18	0	52	58	491	24	0	573	34	6	10	0	50	908
08:45 AM	18	302	11	0	331	28	5	13	0	46	55	548	26	0	629	68	3	9	0	80	1086
Total	91	1031	60	0	1182	141	28	63	0	232	210	1950	100	0	2260	217	32	34	0	283	3957
Grand Total	149	1807	89	4	2049	303	39	91	0	433	298	2990	158	0	3446	364	53	62	0	479	6407
Apprch %	7.3	88.2	4.3	0.2		70	9	21	0		8.6	86.8	4.6	0		76	11.1	12.9	0		
Total %	2.3	28.2	1.4	0.1	32	4.7	0.6	1.4	0	6.8	4.7	46.7	2.5	0	53.8	5.7	0.8	1	0	7.5	

	MATHILDA AVE Southbound					INDIO WY Westbound					MATHILDA AVE Northbound					INDIO WY Eastbound					
Start Time	Right	Thru	Left	Peds	App. Total	Right	Thru	Left	Peds	App. Total	Right	Thru	Left	Peds	App. Total	Right	Thru	Left	Peds	App. Total	Int. Total
Peak Hour Analysis From 07:00 AM to 08:45 AM - Peak 1 of 1																					
Peak Hour for Entire Intersection Begins at 08:00 AM																					
08:00 AM	25	**316**	15	0	**356**	25	8	10	0	43	42	435	22	0	499	63	**18**	6	0	**87**	985
08:15 AM	**26**	220	16	0	262	**63**	6	**22**	0	**91**	55	476	**28**	0	559	52	5	9	0	66	978
08:30 AM	22	193	**18**	0	233	25	**9**	18	0	52	**58**	491	24	0	573	34	6	**10**	0	50	908
08:45 AM	18	302	11	0	331	28	5	13	0	46	55	**548**	26	0	**629**	**68**	3	9	0	80	**1086**
Total Volume	91	1031	60	0	1182	141	28	63	0	232	210	1950	100	0	2260	217	32	34	0	283	3957
% App. Total	7.7	87.2	5.1	0		60.8	12.1	27.2	0		9.3	86.3	4.4	0		76.7	11.3	12	0		
PHF	.875	.816	.833	.000	.830	.560	.778	.716	.000	.637	.905	.890	.893	.000	.898	.798	.444	.850	.000	.813	.911

Traffic Data Service

Campbell, CA

(408) 377-2988

tdsbay@cs.com

File Name : 12AM FINAL
Site Code : 00000012
Start Date : 2/13/2013
Page No : 2

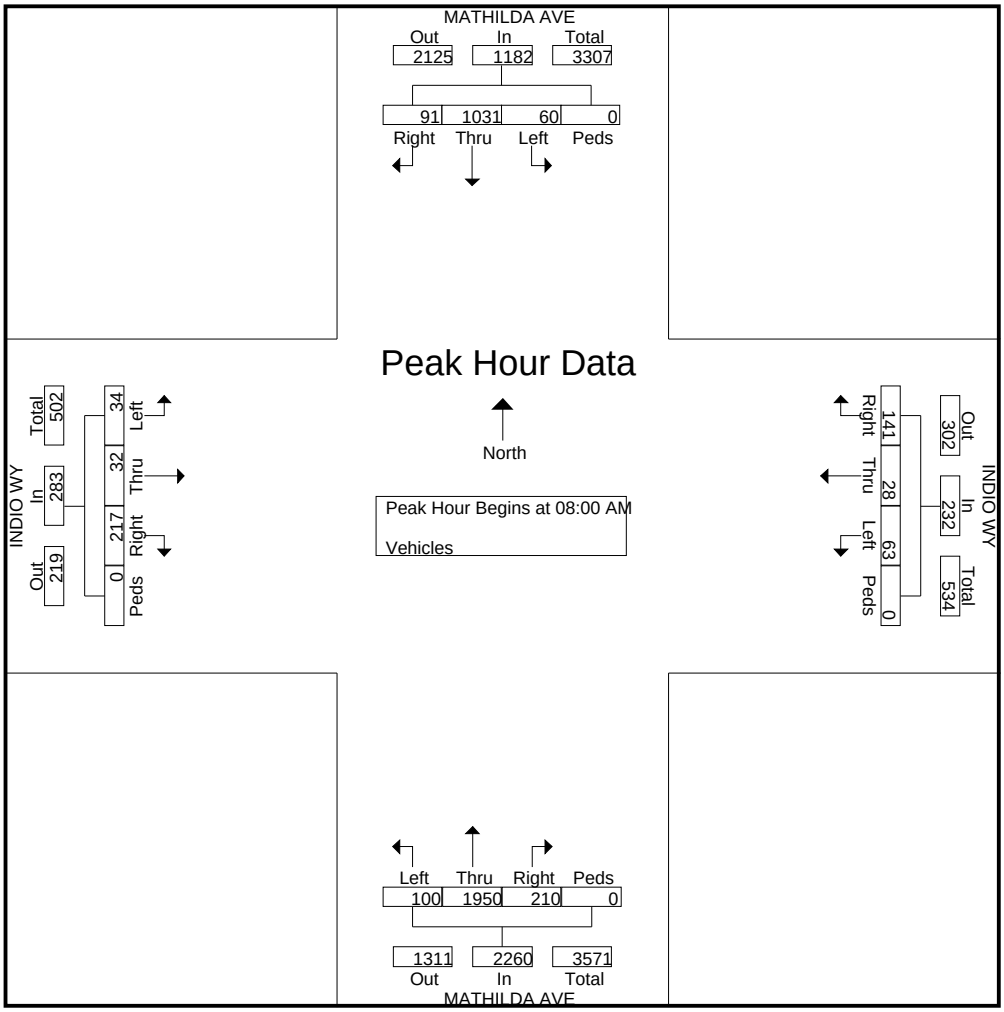

Traffic Data Service

Campbell, CA
(408) 377-2988
tdsbay@cs.com

File Name : 11PM FINAL
Site Code : 00000011
Start Date : 2/13/2013
Page No : 1

Groups Printed- Bikes

	MATHILDA AVE Southbound					MAUDE AVE Westbound					MATHILDA AVE Northbound					MAUDE AVE Eastbound					
Start Time	Right	Thru	Left	Peds	App. Total	Right	Thru	Left	Peds	App. Total	Right	Thru	Left	Peds	App. Total	Right	Thru	Left	Peds	App. Total	Int. Total
04:30 PM	0	1	0	0	1	0	2	0	0	2	0	0	0	0	0	0	0	0	0	0	3
04:45 PM	0	1	0	0	1	0	0	0	0	0	0	0	0	0	0	0	3	0	0	3	4
Total	0	2	0	0	2	0	2	0	0	2	0	0	0	0	0	0	3	0	0	3	7
05:00 PM	0	0	0	0	0	0	0	0	0	0	0	0	0	0	0	0	6	0	0	6	6
05:15 PM	0	0	0	0	0	0	0	1	0	1	0	0	0	0	0	0	2	1	0	3	4
05:30 PM	0	0	0	0	0	0	1	0	0	1	0	0	0	0	0	1	6	0	0	7	8
05:45 PM	0	0	0	0	0	0	4	0	0	4	0	1	0	0	1	0	5	0	0	5	10
Total	0	0	0	0	0	0	5	1	0	6	0	1	0	0	1	1	19	1	0	21	28
06:00 PM	0	0	0	0	0	1	2	1	0	4	0	0	0	0	0	0	7	1	0	8	12
06:15 PM	0	0	0	0	0	0	0	0	0	0	1	0	0	0	1	0	5	0	0	5	6
Grand Total	0	2	0	0	2	1	9	2	0	12	1	1	0	0	2	1	34	2	0	37	53
Apprch %	0	100	0	0		8.3	75	16.7	0		50	50	0	0		2.7	91.9	5.4	0		
Total %	0	3.8	0	0	3.8	1.9	17	3.8	0	22.6	1.9	1.9	0	0	3.8	1.9	64.2	3.8	0	69.8	

	MATHILDA AVE Southbound					MAUDE AVE Westbound					MATHILDA AVE Northbound					MAUDE AVE Eastbound					
Start Time	Right	Thru	Left	Peds	App. Total	Right	Thru	Left	Peds	App. Total	Right	Thru	Left	Peds	App. Total	Right	Thru	Left	Peds	App. Total	Int. Total
Peak Hour Analysis From 04:30 PM to 06:15 PM - Peak 1 of 1																					
Peak Hour for Entire Intersection Begins at 05:30 PM																					
05:30 PM	0	0	0	0	0	0	1	0	0	1	0	0	0	0	0	**1**	6	0	0	7	8
05:45 PM	0	0	0	0	0	0	**4**	0	0	**4**	0	**1**	0	0	**1**	0	5	0	0	5	10
06:00 PM	0	0	0	0	0	**1**	2	**1**	0	4	0	0	0	0	0	0	**7**	**1**	0	**8**	**12**
06:15 PM	0	0	0	0	0	0	0	0	0	0	**1**	0	0	0	1	0	5	0	0	5	6
Total Volume	0	0	0	0	0	1	7	1	0	9	1	1	0	0	2	1	23	1	0	25	36
% App. Total	0	0	0	0		11.1	77.8	11.1	0		50	50	0	0		4	92	4	0		
PHF	.000	.000	.000	.000	.000	.250	.438	.250	.000	.563	.250	.250	.000	.000	.500	.250	.821	.250	.000	.781	.750

Traffic Data Service

Campbell, CA
(408) 377-2988
tdsbay@cs.com

File Name : 11PM FINAL
Site Code : 00000011
Start Date : 2/13/2013
Page No : 2

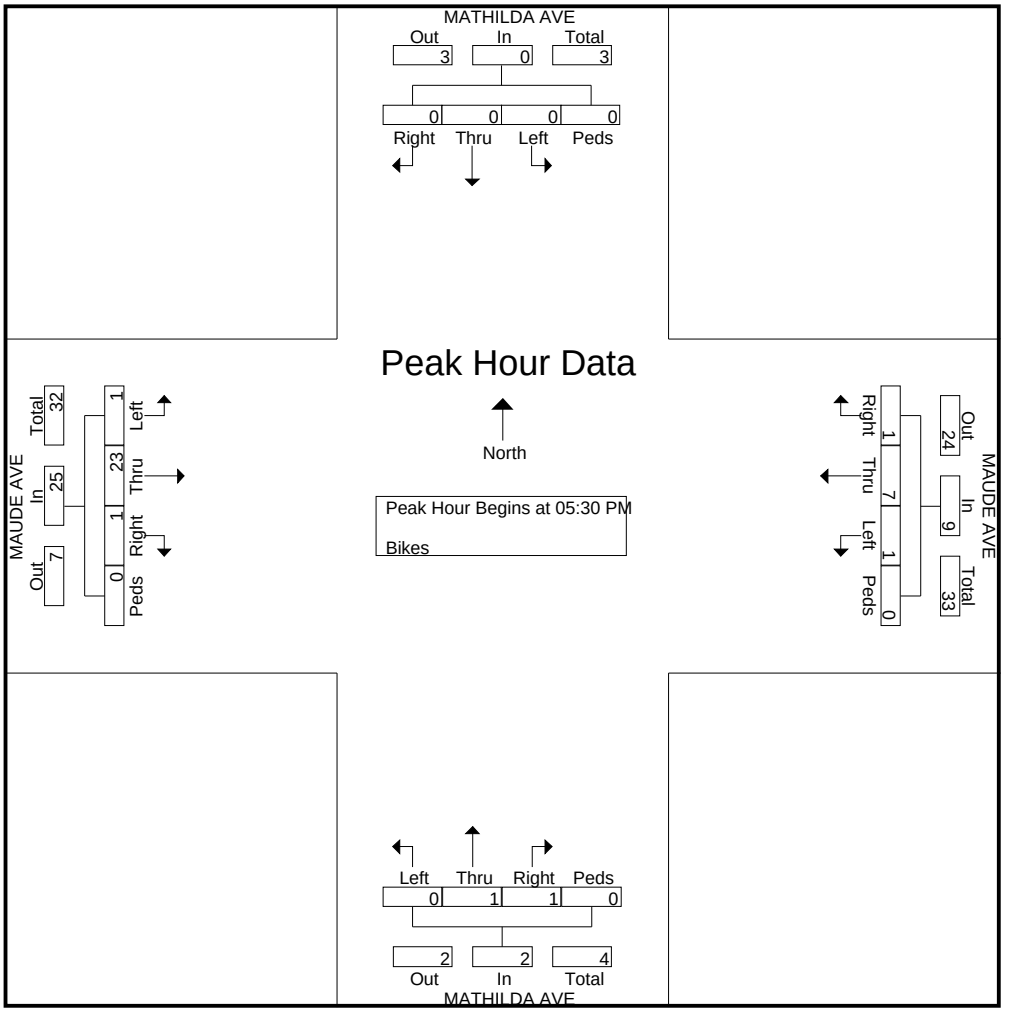

Traffic Data Service

Campbell, CA
(408) 377-2988
tdsbay@cs.com

File Name : 11PM FINAL
Site Code : 00000011
Start Date : 2/13/2013
Page No : 1

Groups Printed- Vehicles

	MATHILDA AVE Southbound					MAUDE AVE Westbound					MATHILDA AVE Northbound					MAUDE AVE Eastbound					
Start Time	Right	Thru	Left	Peds	App. Total	Right	Thru	Left	Peds	App. Total	Right	Thru	Left	Peds	App. Total	Right	Thru	Left	Peds	App. Total	Int. Total
04:30 PM	16	469	55	0	540	35	24	34	5	98	29	217	26	1	273	54	43	36	0	133	1044
04:45 PM	15	415	95	1	526	42	29	29	4	104	26	169	25	1	221	53	50	42	0	145	996
Total	31	884	150	1	1066	77	53	63	9	202	55	386	51	2	494	107	93	78	0	278	2040
05:00 PM	16	499	80	1	596	35	26	24	7	92	29	222	20	0	271	81	71	63	0	215	1174
05:15 PM	22	632	91	0	745	48	24	26	2	100	27	191	33	6	257	87	92	36	0	215	1317
05:30 PM	19	566	91	0	676	35	35	48	7	125	50	200	20	10	280	84	106	67	0	257	1338
05:45 PM	19	677	113	0	809	26	28	32	6	92	35	235	42	6	318	74	92	43	0	209	1428
Total	76	2374	375	1	2826	144	113	130	22	409	141	848	115	22	1126	326	361	209	0	896	5257
06:00 PM	37	556	114	0	707	50	34	26	7	117	30	209	25	3	267	84	94	49	2	229	1320
06:15 PM	8	571	88	0	667	33	28	39	5	105	36	243	26	5	310	90	79	45	4	218	1300
Grand Total	152	4385	727	2	5266	304	228	258	43	833	262	1686	217	32	2197	607	627	381	6	1621	9917
Apprch %	2.9	83.3	13.8	0		36.5	27.4	31	5.2		11.9	76.7	9.9	1.5		37.4	38.7	23.5	0.4		
Total %	1.5	44.2	7.3	0	53.1	3.1	2.3	2.6	0.4	8.4	2.6	17	2.2	0.3	22.2	6.1	6.3	3.8	0.1	16.3	

	MATHILDA AVE Southbound					MAUDE AVE Westbound					MATHILDA AVE Northbound					MAUDE AVE Eastbound					
Start Time	Right	Thru	Left	Peds	App. Total	Right	Thru	Left	Peds	App. Total	Right	Thru	Left	Peds	App. Total	Right	Thru	Left	Peds	App. Total	Int. Total
Peak Hour Analysis From 04:30 PM to 06:15 PM - Peak 1 of 1																					
Peak Hour for Entire Intersection Begins at 05:15 PM																					
05:15 PM	22	632	91	0	745	48	24	26	2	100	27	191	33	6	257	**87**	92	36	0	215	1317
05:30 PM	19	566	91	0	676	35	**35**	**48**	**7**	**125**	**50**	200	20	**10**	280	84	**106**	**67**	0	**257**	1338
05:45 PM	19	**677**	113	0	**809**	26	28	32	6	92	35	**235**	**42**	6	**318**	74	92	43	0	209	**1428**
06:00 PM	**37**	556	**114**	0	707	**50**	34	26	7	117	30	209	25	3	267	84	94	49	**2**	229	1320
Total Volume	97	2431	409	0	2937	159	121	132	22	434	142	835	120	25	1122	329	384	195	2	910	5403
% App. Total																					
PHF	.655	.898	.897	.000	.908	.795	.864	.688	.786	.868	.710	.888	.714	.625	.882	.945	.906	.728	.250	.885	.946

Traffic Data Service

Campbell, CA
(408) 377-2988
tdsbay@cs.com

File Name : 11PM FINAL
Site Code : 00000011
Start Date : 2/13/2013
Page No : 2

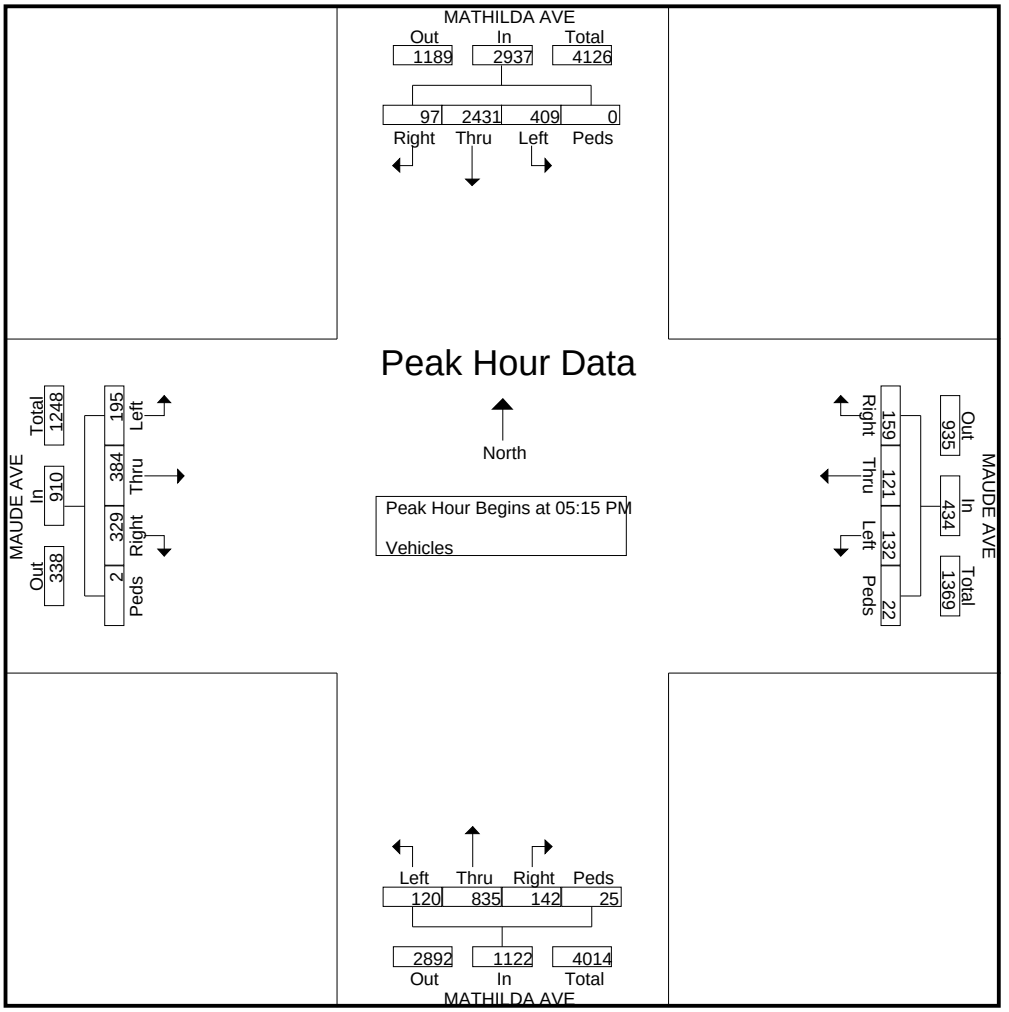

Traffic Data Service

Campbell, CA
(408) 377-2988
tdsbay@cs.com

File Name : 11AM FINAL
Site Code : 00000011
Start Date : 2/13/2013
Page No : 1

Groups Printed- Bikes

	MATHILDA AVE Southbound					MAUDE AVE Westbound					MATHILDA AVE Northbound					MAUDE AVE Eastbound					
Start Time	Right	Thru	Left	Peds	App. Total	Right	Thru	Left	Peds	App. Total	Right	Thru	Left	Peds	App. Total	Right	Thru	Left	Peds	App. Total	Int. Total
07:00 AM	0	0	0	0	0	0	1	0	0	1	0	0	0	0	0	0	0	0	0	0	1
07:15 AM	0	0	0	0	0	0	3	0	0	3	0	2	0	0	2	0	0	0	0	0	5
07:30 AM	0	0	0	0	0	0	1	0	0	1	0	1	0	0	1	0	1	0	0	1	3
07:45 AM	0	0	0	0	0	0	2	0	0	2	0	0	0	0	0	0	0	0	0	0	2
Total	0	0	0	0	0	0	7	0	0	7	0	3	0	0	3	0	1	0	0	1	11
08:00 AM	0	0	0	0	0	0	2	0	0	2	0	1	0	0	1	0	0	0	0	0	3
08:15 AM	0	0	0	0	0	1	7	0	0	8	0	1	0	0	1	0	2	0	0	2	11
08:30 AM	0	0	0	0	0	0	5	0	0	5	0	1	0	0	1	0	1	0	0	1	7
08:45 AM	0	0	0	0	0	0	7	0	0	7	0	0	0	0	0	0	1	0	0	1	8
Total	0	0	0	0	0	1	21	0	0	22	0	3	0	0	3	0	4	0	0	4	29
Grand Total	0	0	0	0	0	1	28	0	0	29	0	6	0	0	6	0	5	0	0	5	40
Apprch %	0	0	0	0		3.4	96.6	0	0		0	100	0	0		0	100	0	0		
Total %	0	0	0	0	0	2.5	70	0	0	72.5	0	15	0	0	15	0	12.5	0	0	12.5	

	MATHILDA AVE Southbound					MAUDE AVE Westbound					MATHILDA AVE Northbound					MAUDE AVE Eastbound					
Start Time	Right	Thru	Left	Peds	App. Total	Right	Thru	Left	Peds	App. Total	Right	Thru	Left	Peds	App. Total	Right	Thru	Left	Peds	App. Total	Int. Total
Peak Hour Analysis From 07:00 AM to 08:45 AM - Peak 1 of 1																					
Peak Hour for Entire Intersection Begins at 08:00 AM																					
08:00 AM	0	0	0	0	0	0	2	0	0	2	0	**1**	0	0	**1**	0	0	0	0	0	3
08:15 AM	0	0	0	0	0	**1**	**7**	0	0	**8**	0	1	0	0	1	0	**2**	0	0	**2**	**11**
08:30 AM	0	0	0	0	0	0	5	0	0	5	0	1	0	0	1	0	1	0	0	1	7
08:45 AM	0	0	0	0	0	0	7	0	0	7	0	0	0	0	0	0	1	0	0	1	8
Total Volume	0	0	0	0	0	1	21	0	0	22	0	3	0	0	3	0	4	0	0	4	29
% App. Total	0	0	0	0		4.5	95.5	0	0		0	100	0	0		0	100	0	0		
PHF	.000	.000	.000	.000	.000	.250	.750	.000	.000	.688	.000	.750	.000	.000	.750	.000	.500	.000	.000	.500	.659

Traffic Data Service

Campbell, CA

(408) 377-2988

tdsbay@cs.com

File Name : 11AM FINAL
Site Code : 00000011
Start Date : 2/13/2013
Page No : 2

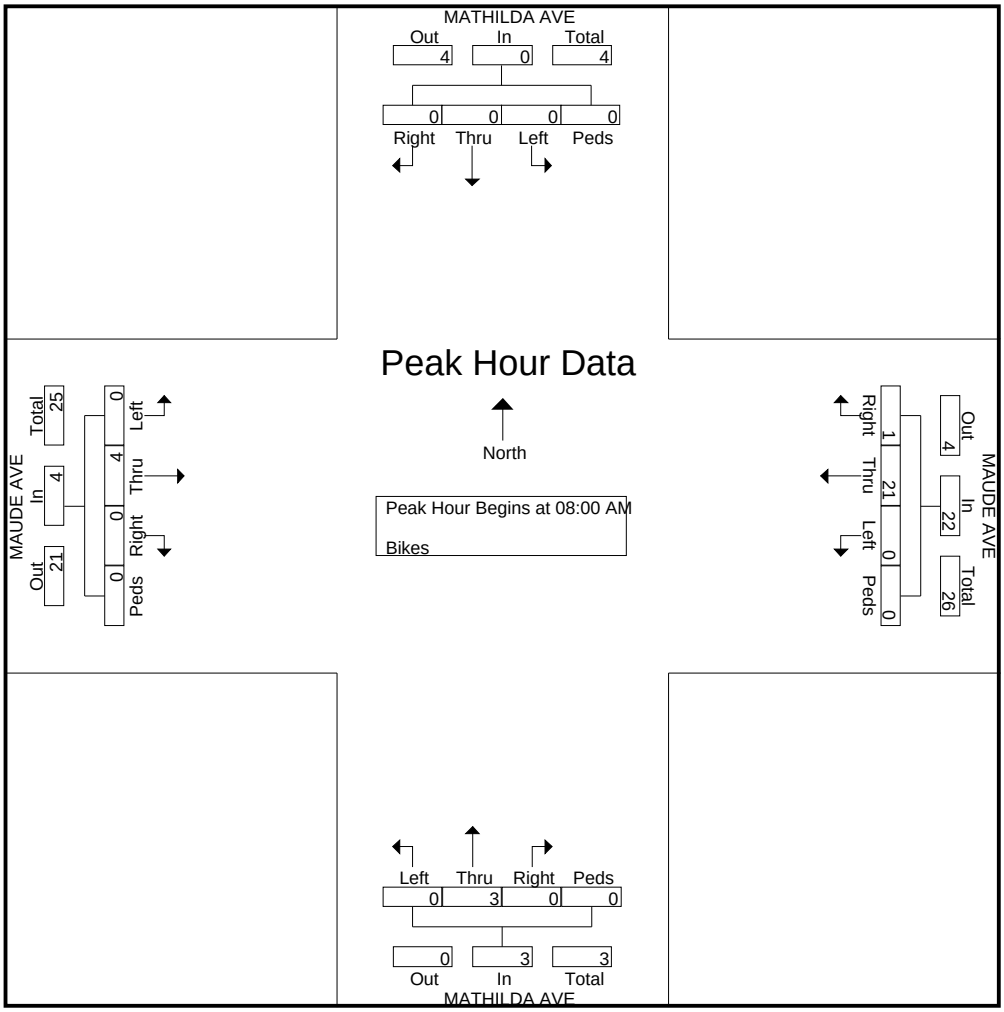

Traffic Data Service

Campbell, CA
(408) 377-2988
tdsbay@cs.com

File Name : 11AM FINAL
Site Code : 00000011
Start Date : 2/13/2013
Page No : 1

Groups Printed- Vehicles

	MATHILDA AVE Southbound					MAUDE AVE Westbound					MATHILDA AVE Northbound					MAUDE AVE Eastbound					
Start Time	Right	Thru	Left	Peds	App. Total	Right	Thru	Left	Peds	App. Total	Right	Thru	Left	Peds	App. Total	Right	Thru	Left	Peds	App. Total	Int. Total
07:00 AM	40	159	38	0	237	48	42	10	4	104	6	199	30	2	237	3	8	10	0	21	599
07:15 AM	43	123	62	1	229	55	57	24	2	138	11	232	29	1	273	2	19	15	0	36	676
07:30 AM	41	205	29	1	276	74	86	35	2	197	11	309	36	0	356	9	19	15	0	43	872
07:45 AM	33	234	38	2	307	69	71	40	0	180	14	335	52	0	401	8	15	29	0	52	940
Total	157	721	167	4	1049	246	256	109	8	619	42	1075	147	3	1267	22	61	69	0	152	3087
08:00 AM	48	259	34	0	341	70	64	49	7	190	15	438	58	3	514	17	8	19	0	44	1089
08:15 AM	42	210	44	0	296	68	65	35	3	171	16	458	97	3	574	15	17	25	0	57	1098
08:30 AM	54	164	36	0	254	56	80	35	3	174	19	554	69	2	644	6	22	39	0	67	1139
08:45 AM	46	290	43	0	379	69	73	40	8	190	6	561	126	6	699	22	14	25	0	61	1329
Total	190	923	157	0	1270	263	282	159	21	725	56	2011	350	14	2431	60	61	108	0	229	4655
Grand Total	347	1644	324	4	2319	509	538	268	29	1344	98	3086	497	17	3698	82	122	177	0	381	7742
Apprch %	15	70.9	14	0.2		37.9	40	19.9	2.2		2.7	83.5	13.4	0.5		21.5	32	46.5	0		
Total %	4.5	21.2	4.2	0.1	30	6.6	6.9	3.5	0.4	17.4	1.3	39.9	6.4	0.2	47.8	1.1	1.6	2.3	0	4.9	

	MATHILDA AVE Southbound					MAUDE AVE Westbound					MATHILDA AVE Northbound					MAUDE AVE Eastbound					
Start Time	Right	Thru	Left	Peds	App. Total	Right	Thru	Left	Peds	App. Total	Right	Thru	Left	Peds	App. Total	Right	Thru	Left	Peds	App. Total	Int. Total
Peak Hour Analysis From 07:00 AM to 08:45 AM - Peak 1 of 1																					
Peak Hour for Entire Intersection Begins at 08:00 AM																					
08:00 AM	48	259	34	0	341	**70**	64	**49**	7	**190**	15	438	58	3	514	17	8	19	0	44	1089
08:15 AM	42	210	**44**	0	296	68	65	35	3	171	16	458	97	3	574	15	17	25	0	57	1098
08:30 AM	**54**	164	36	0	254	56	**80**	35	3	174	**19**	554	69	2	644	6	**22**	**39**	0	**67**	1139
08:45 AM	46	**290**	43	0	**379**	69	73	40	**8**	190	6	**561**	**126**	**6**	**699**	**22**	14	25	0	61	**1329**
Total Volume	190	923	157	0	1270	263	282	159	21	725	56	2011	350	14	2431	60	61	108	0	229	4655
% App. Total																					
PHF	.880	.796	.892	.000	.838	.939	.881	.811	.656	.954	.737	.896	.694	.583	.869	.682	.693	.692	.000	.854	.876

Traffic Data Service

Campbell, CA

(408) 377-2988

tdsbay@cs.com

File Name : 11AM FINAL
Site Code : 00000011
Start Date : 2/13/2013
Page No : 2

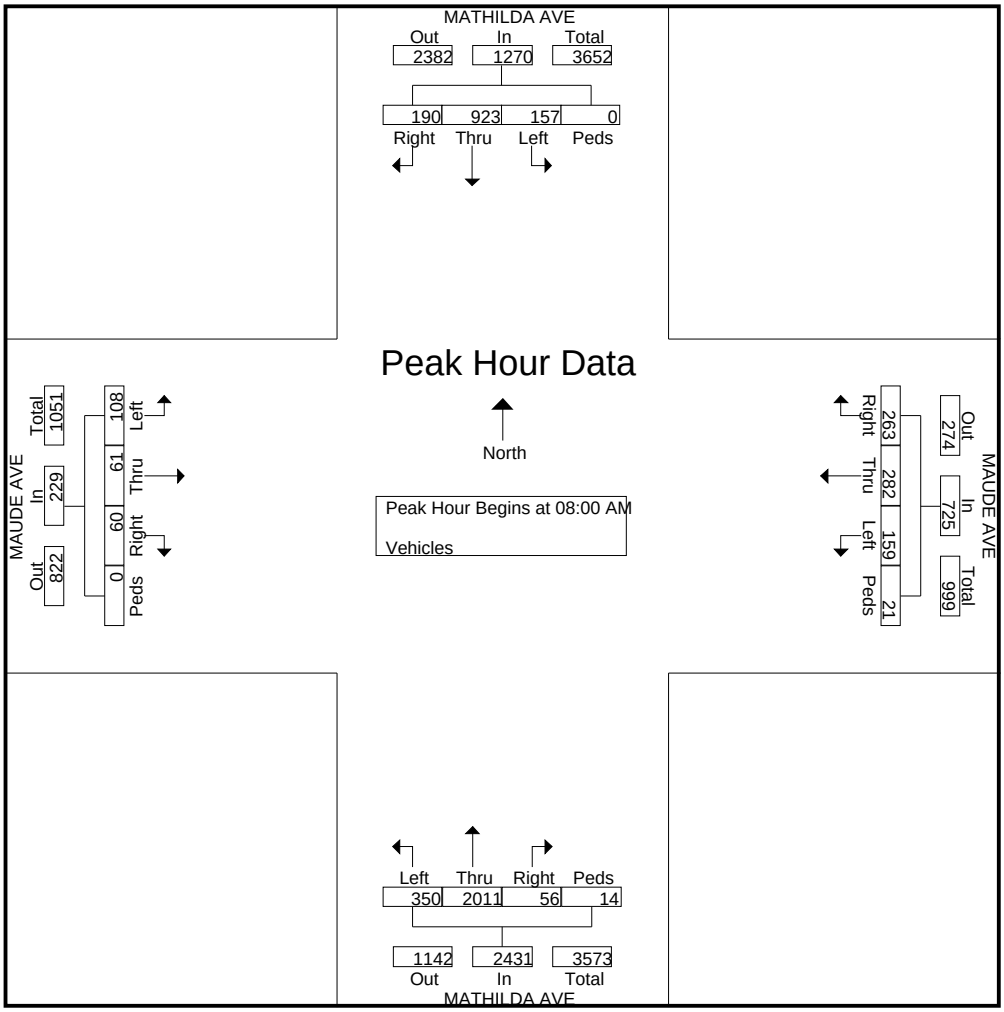

Traffic Data Service

Campbell, CA
(408) 377-2988
tdsbay@cs.com

File Name : 10PM FINAL
Site Code : 00000010
Start Date : 2/13/2013
Page No : 1

Groups Printed- Bikes

	MATHILDA AVE Southbound					SAN ALESO AVE Westbound					MATHILDA AVE Northbound					DRIVEWAY Eastbound					
Start Time	Right	Thru	Left	Peds	App. Total	Right	Thru	Left	Peds	App. Total	Right	Thru	Left	Peds	App. Total	Right	Thru	Left	Peds	App. Total	Int. Total
04:30 PM	0	0	0	0	0	0	0	0	0	0	0	0	0	0	0	0	0	0	0	0	0
04:45 PM	0	0	0	0	0	0	0	0	0	0	0	0	0	0	0	0	0	0	0	0	0
Total	0	0	0	0	0	0	0	0	0	0	0	0	0	0	0	0	0	0	0	0	0
05:00 PM	0	0	0	0	0	0	0	0	0	0	0	0	0	0	0	0	0	0	0	0	0
05:15 PM	0	0	0	0	0	0	0	0	0	0	0	1	0	0	1	0	0	0	0	0	1
05:30 PM	0	0	0	0	0	0	0	0	0	0	0	0	0	0	0	1	0	0	0	1	1
05:45 PM	0	1	0	0	1	0	0	0	0	0	0	0	0	0	0	0	0	0	0	0	1
Total	0	1	0	0	1	0	0	0	0	0	0	1	0	0	1	1	0	0	0	1	3
06:00 PM	0	0	0	0	0	0	0	0	0	0	0	2	0	0	2	0	0	0	0	0	2
06:15 PM	0	0	0	0	0	0	0	0	0	0	0	0	0	0	0	0	0	0	0	0	0
Grand Total	0	1	0	0	1	0	0	0	0	0	0	3	0	0	3	1	0	0	0	1	5
Apprch %	0	100	0	0		0	0	0	0		0	100	0	0		100	0	0	0		
Total %	0	20	0	0	20	0	0	0	0	0	0	60	0	0	60	20	0	0	0	20	

	MATHILDA AVE Southbound					SAN ALESO AVE Westbound					MATHILDA AVE Northbound					DRIVEWAY Eastbound					
Start Time	Right	Thru	Left	Peds	App. Total	Right	Thru	Left	Peds	App. Total	Right	Thru	Left	Peds	App. Total	Right	Thru	Left	Peds	App. Total	Int. Total
Peak Hour Analysis From 04:30 PM to 06:15 PM - Peak 1 of 1																					
Peak Hour for Entire Intersection Begins at 05:15 PM																					
05:15 PM	0	0	0	0	0	0	0	0	0	0	0	1	0	0	1	0	0	0	0	0	1
05:30 PM	0	0	0	0	0	0	0	0	0	0	0	0	0	0	0	**1**	0	0	0	**1**	1
05:45 PM	0	**1**	0	0	**1**	0	0	0	0	0	0	0	0	0	0	0	0	0	0	0	1
06:00 PM	0	0	0	0	0	0	0	0	0	0	0	**2**	0	0	**2**	0	0	0	0	0	**2**
Total Volume	0	1	0	0	1	0	0	0	0	0	0	3	0	0	3	1	0	0	0	1	5
% App. Total	0	100	0	0		0	0	0	0		0	100	0	0		100	0	0	0		
PHF	.000	.250	.000	.000	.250	.000	.000	.000	.000	.000	.000	.375	.000	.000	.375	.250	.000	.000	.000	.250	.625

Traffic Data Service

Campbell, CA
(408) 377-2988
tdsbay@cs.com

File Name : 10PM FINAL
Site Code : 00000010
Start Date : 2/13/2013
Page No : 2

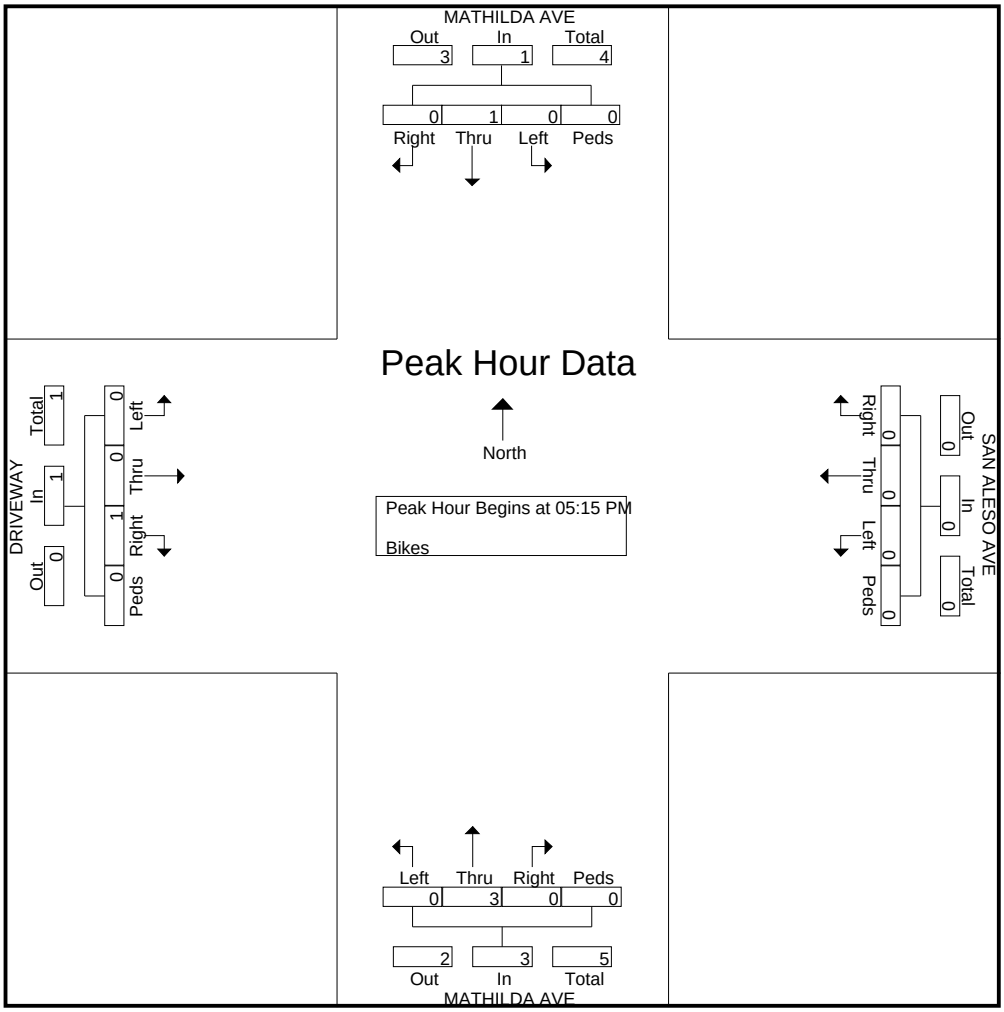

Traffic Data Service

Campbell, CA
(408) 377-2988
tdsbay@cs.com

File Name : 10PM FINAL
Site Code : 00000010
Start Date : 2/13/2013
Page No : 1

Groups Printed- Vehicles

	MATHILDA AVE Southbound					SAN ALESO AVE Westbound					MATHILDA AVE Northbound					DRIVEWAY Eastbound					
Start Time	Right	Thru	Left	Peds	App. Total	Right	Thru	Left	Peds	App. Total	Right	Thru	Left	Peds	App. Total	Right	Thru	Left	Peds	App. Total	Int. Total
04:30 PM	1	513	11	0	525	14	0	10	1	25	11	287	4	0	302	3	0	5	0	8	860
04:45 PM	2	475	19	1	497	9	0	15	4	28	9	234	4	0	247	10	0	10	0	20	792
Total	3	988	30	1	1022	23	0	25	5	53	20	521	8	0	549	13	0	15	0	28	1652
05:00 PM	1	604	16	2	623	11	0	20	3	34	10	287	3	0	300	12	0	7	1	20	977
05:15 PM	2	679	17	1	699	11	0	8	6	25	6	305	2	1	314	10	0	2	1	13	1051
05:30 PM	3	846	29	0	878	8	0	18	5	31	14	266	5	1	286	11	0	3	1	15	1210
05:45 PM	1	780	18	1	800	11	0	8	6	25	15	285	2	3	305	7	0	8	2	17	1147
Total	7	2909	80	4	3000	41	0	54	20	115	45	1143	12	5	1205	40	0	20	5	65	4385
06:00 PM	2	744	31	0	777	13	0	14	1	28	8	344	1	4	357	6	0	10	0	16	1178
06:15 PM	2	651	20	0	673	10	0	16	0	26	7	278	6	0	291	4	0	4	0	8	998
Grand Total	14	5292	161	5	5472	87	0	109	26	222	80	2286	27	9	2402	63	0	49	5	117	8213
Apprch %	0.3	96.7	2.9	0.1		39.2	0	49.1	11.7		3.3	95.2	1.1	0.4		53.8	0	41.9	4.3		
Total %	0.2	64.4	2	0.1	66.6	1.1	0	1.3	0.3	2.7	1	27.8	0.3	0.1	29.2	0.8	0	0.6	0.1	1.4	

	MATHILDA AVE Southbound					SAN ALESO AVE Westbound					MATHILDA AVE Northbound					DRIVEWAY Eastbound					
Start Time	Right	Thru	Left	Peds	App. Total	Right	Thru	Left	Peds	App. Total	Right	Thru	Left	Peds	App. Total	Right	Thru	Left	Peds	App. Total	Int. Total
Peak Hour Analysis From 04:30 PM to 06:15 PM - Peak 1 of 1																					
Peak Hour for Entire Intersection Begins at 05:15 PM																					
05:15 PM	2	679	17	**1**	699	11	0	8	**6**	25	6	305	2	1	314	10	0	2	1	13	1051
05:30 PM	**3**	**846**	29	0	**878**	8	0	**18**	5	**31**	14	266	**5**	1	286	**11**	0	3	1	15	**1210**
05:45 PM	1	780	18	1	800	11	0	8	6	25	**15**	285	2	3	305	7	0	8	**2**	**17**	1147
06:00 PM	2	744	**31**	0	777	**13**	0	14	1	28	8	**344**	1	**4**	**357**	6	0	**10**	0	16	1178
Total Volume	8	3049	95	2	3154	43	0	48	18	109	43	1200	10	9	1262	34	0	23	4	61	4586
% App. Total																					
PHF	.667	.901	.766	.500	.898	.827	.000	.667	.750	.879	.717	.872	.500	.563	.884	.773	.000	.575	.500	.897	.948

Traffic Data Service

Campbell, CA
(408) 377-2988
tdsbay@cs.com

File Name : 10PM FINAL
Site Code : 00000010
Start Date : 2/13/2013
Page No : 2

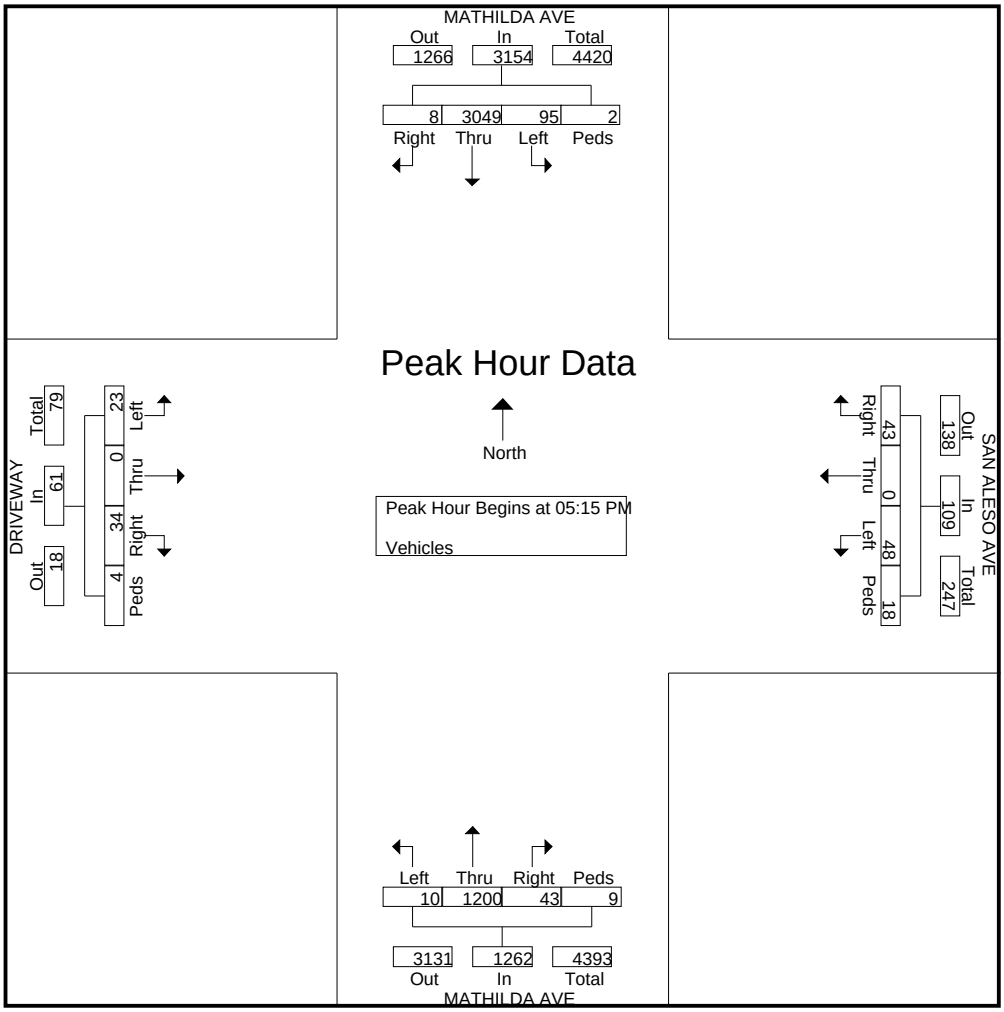

Traffic Data Service

Campbell, CA
(408) 377-2988
tdsbay@cs.com

File Name : 10AM FINAL
Site Code : 00000010
Start Date : 2/13/2013
Page No : 1

Groups Printed- Bikes

	MATHILDA AVE Southbound					SAN ALESO AVE Westbound					MATHILDA AVE Northbound					DRIVEWAY Eastbound					
Start Time	Right	Thru	Left	Peds	App. Total	Right	Thru	Left	Peds	App. Total	Right	Thru	Left	Peds	App. Total	Right	Thru	Left	Peds	App. Total	Int. Total
07:00 AM	0	0	0	0	0	0	0	0	0	0	1	0	0	0	1	0	0	0	0	0	1
07:15 AM	0	0	0	0	0	1	0	0	0	1	0	1	0	0	1	0	0	0	0	0	2
07:30 AM	0	1	0	0	1	0	0	0	0	0	0	1	0	0	1	0	0	0	0	0	2
07:45 AM	0	0	0	0	0	0	0	0	0	0	0	0	0	0	0	0	0	0	0	0	0
Total	0	1	0	0	1	1	0	0	0	1	1	2	0	0	3	0	0	0	0	0	5
08:00 AM	0	0	0	0	0	0	0	0	0	0	0	0	0	0	0	0	0	0	0	0	0
08:15 AM	0	2	0	0	2	0	0	0	0	0	0	0	0	0	0	0	0	0	0	0	2
08:30 AM	0	0	0	0	0	0	0	0	0	0	0	2	0	0	2	0	0	0	0	0	2
08:45 AM	0	0	0	0	0	0	0	0	0	0	0	0	0	0	0	0	0	0	0	0	0
Total	0	2	0	0	2	0	0	0	0	0	0	2	0	0	2	0	0	0	0	0	4
Grand Total	0	3	0	0	3	1	0	0	0	1	1	4	0	0	5	0	0	0	0	0	9
Apprch %	0	100	0	0		100	0	0	0		20	80	0	0		0	0	0	0		
Total %	0	33.3	0	0	33.3	11.1	0	0	0	11.1	11.1	44.4	0	0	55.6	0	0	0	0	0	

	MATHILDA AVE Southbound					SAN ALESO AVE Westbound					MATHILDA AVE Northbound					DRIVEWAY Eastbound					
Start Time	Right	Thru	Left	Peds	App. Total	Right	Thru	Left	Peds	App. Total	Right	Thru	Left	Peds	App. Total	Right	Thru	Left	Peds	App. Total	Int. Total
Peak Hour Analysis From 07:00 AM to 08:45 AM - Peak 1 of 1																					
Peak Hour for Entire Intersection Begins at 07:00 AM																					
07:00 AM	0	0	0	0	0	0	0	0	0	0	**1**	0	0	0	**1**	0	0	0	0	0	1
07:15 AM	0	0	0	0	0	**1**	0	0	0	**1**	0	**1**	0	0	1	0	0	0	0	0	**2**
07:30 AM	0	**1**	0	0	**1**	0	0	0	0	0	0	1	0	0	1	0	0	0	0	0	2
07:45 AM	0	0	0	0	0	0	0	0	0	0	0	0	0	0	0	0	0	0	0	0	0
Total Volume	0	1	0	0	1	1	0	0	0	1	1	2	0	0	3	0	0	0	0	0	5
% App. Total	0	100	0	0		100	0	0	0		33.3	66.7	0	0		0	0	0	0		
PHF	.000	.250	.000	.000	.250	.250	.000	.000	.000	.250	.250	.500	.000	.000	.750	.000	.000	.000	.000	.000	.625

Traffic Data Service

Campbell, CA
(408) 377-2988
tdsbay@cs.com

File Name : 10AM FINAL
Site Code : 00000010
Start Date : 2/13/2013
Page No : 2

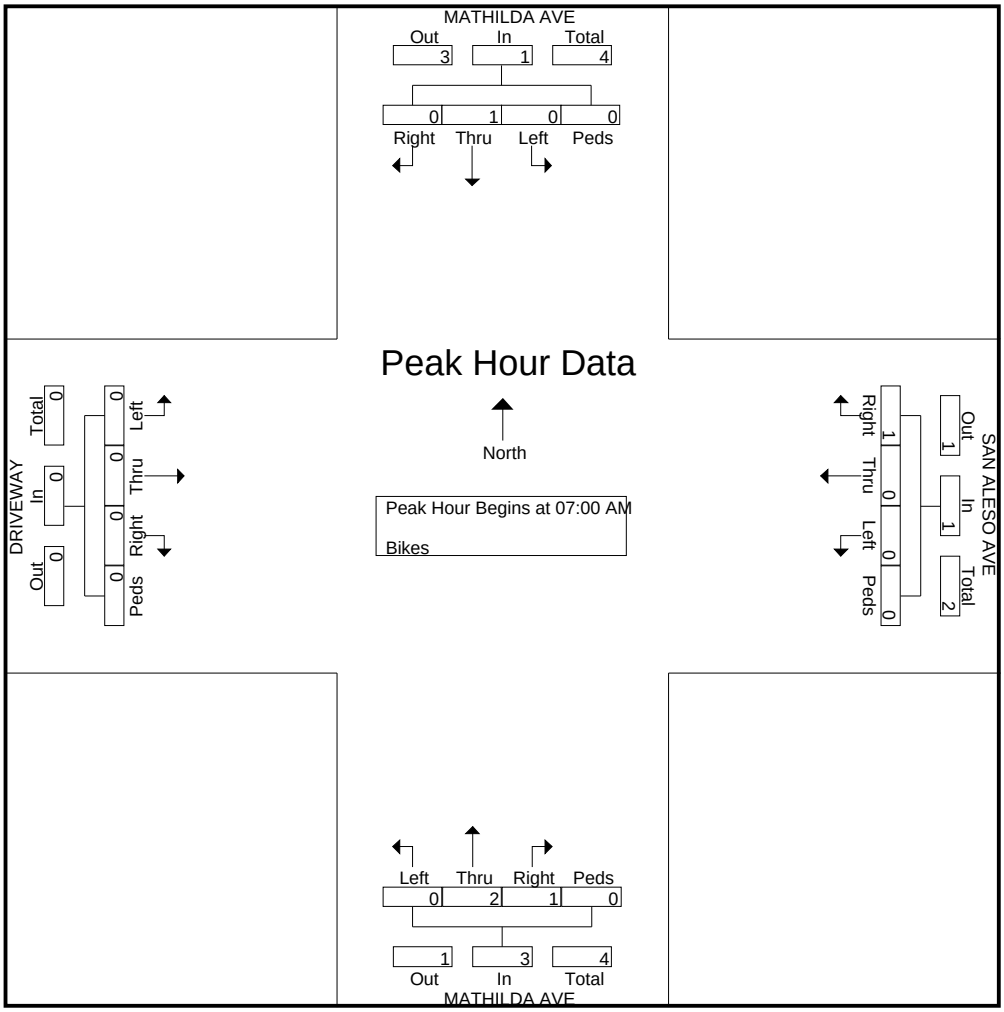

Traffic Data Service

Campbell, CA
(408) 377-2988
tdsbay@cs.com

File Name : 10AM FINAL
Site Code : 00000010
Start Date : 2/13/2013
Page No : 1

Groups Printed- Vehicles

	MATHILDA AVE Southbound					SAN ALESO AVE Westbound					MATHILDA AVE Northbound					DRIVEWAY Eastbound					
Start Time	Right	Thru	Left	Peds	App. Total	Right	Thru	Left	Peds	App. Total	Right	Thru	Left	Peds	App. Total	Right	Thru	Left	Peds	App. Total	Int. Total
07:00 AM	3	236	7	0	246	2	0	2	3	7	6	240	2	0	248	0	0	0	1	1	502
07:15 AM	6	288	15	1	310	2	0	4	2	8	7	329	2	0	338	1	0	0	0	1	657
07:30 AM	8	281	13	0	302	5	1	4	1	11	11	380	6	1	398	0	0	1	0	1	712
07:45 AM	4	344	14	0	362	4	1	5	1	11	14	369	11	2	396	0	0	1	2	3	772
Total	21	1149	49	1	1220	13	2	15	7	37	38	1318	21	3	1380	1	0	2	3	6	2643
08:00 AM	12	333	14	0	359	6	0	4	2	12	17	518	6	2	543	0	1	2	1	4	918
08:15 AM	6	288	16	1	311	2	0	1	2	5	15	554	3	1	573	1	0	3	0	4	893
08:30 AM	5	269	20	0	294	6	0	10	4	20	18	607	8	4	637	1	0	0	3	4	955
08:45 AM	10	386	12	3	411	2	0	12	2	16	18	550	7	5	580	0	0	3	4	7	1014
Total	33	1276	62	4	1375	16	0	27	10	53	68	2229	24	12	2333	2	1	8	8	19	3780
Grand Total	54	2425	111	5	2595	29	2	42	17	90	106	3547	45	15	3713	3	1	10	11	25	6423
Apprch %	2.1	93.4	4.3	0.2		32.2	2.2	46.7	18.9		2.9	95.5	1.2	0.4		12	4	40	44		
Total %	0.8	37.8	1.7	0.1	40.4	0.5	0	0.7	0.3	1.4	1.7	55.2	0.7	0.2	57.8	0	0	0.2	0.2	0.4	

	MATHILDA AVE Southbound					SAN ALESO AVE Westbound					MATHILDA AVE Northbound					DRIVEWAY Eastbound					
Start Time	Right	Thru	Left	Peds	App. Total	Right	Thru	Left	Peds	App. Total	Right	Thru	Left	Peds	App. Total	Right	Thru	Left	Peds	App. Total	Int. Total
Peak Hour Analysis From 07:00 AM to 08:45 AM - Peak 1 of 1																					
Peak Hour for Entire Intersection Begins at 08:00 AM																					
08:00 AM	**12**	333	14	0	359	**6**	0	4	2	12	17	518	6	2	543	0	**1**	2	1	4	918
08:15 AM	6	288	16	1	311	2	0	1	2	5	15	554	3	1	573	**1**	0	**3**	0	4	893
08:30 AM	5	269	**20**	0	294	6	0	10	**4**	**20**	**18**	**607**	**8**	4	**637**	1	0	0	3	4	955
08:45 AM	10	**386**	12	**3**	**411**	2	0	**12**	2	16	18	550	7	**5**	580	0	0	3	**4**	**7**	**1014**
Total Volume	33	1276	62	4	1375	16	0	27	10	53	68	2229	24	12	2333	2	1	8	8	19	3780
% App. Total																					
PHF	.688	.826	.775	.333	.836	.667	.000	.563	.625	.663	.944	.918	.750	.600	.916	.500	.250	.667	.500	.679	.932

Traffic Data Service

Campbell, CA
(408) 377-2988
tdsbay@cs.com

File Name : 10AM FINAL
Site Code : 00000010
Start Date : 2/13/2013
Page No : 2

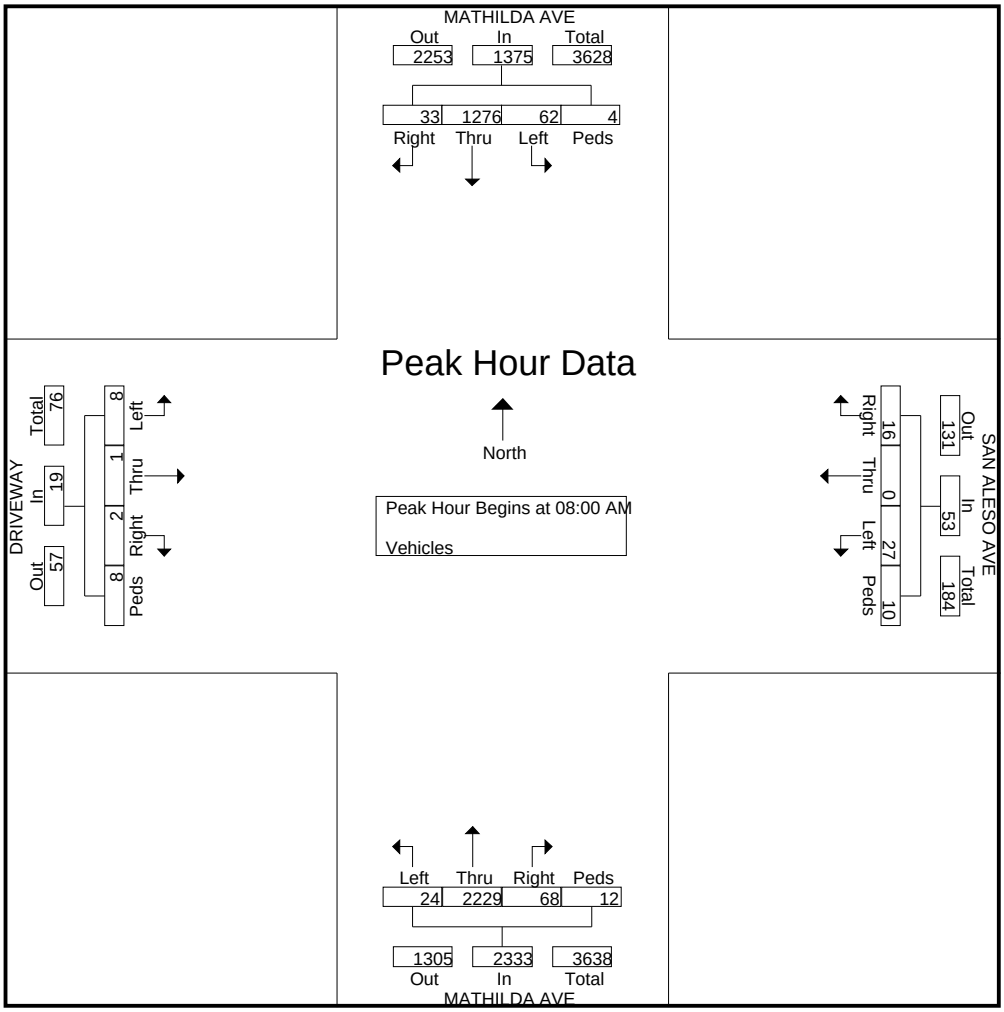

Traffic Data Service

Campbell, CA
(408) 377-2988
tdsbay@cs.com

File Name : 1AM FINAL
Site Code : 00000001
Start Date : 3/14/2013
Page No : 1

Groups Printed- Vehicles

	BORREGAS AVE Southbound					MOFFETT PARK DR Westbound					Northbound					MOFFETT PARK DR Eastbound					
Start Time	Right	Thru	Left	Peds	App. Total	Right	Thru	Left	Peds	App. Total	Right	Thru	Left	Peds	App. Total	Right	Thru	Left	Peds	App. Total	Int. Total
07:00 AM	5	0	1	0	6	4	14	0	0	18	0	0	0	0	0	0	35	30	2	67	91
07:15 AM	5	0	0	0	5	5	11	0	0	16	0	0	0	0	0	0	40	52	0	92	113
07:30 AM	7	0	0	0	7	10	31	0	0	41	0	0	0	0	0	0	36	42	3	81	129
07:45 AM	7	0	2	0	9	9	30	0	0	39	0	0	0	0	0	0	37	50	0	87	135
Total	24	0	3	0	27	28	86	0	0	114	0	0	0	0	0	0	148	174	5	327	468
08:00 AM	5	0	1	0	6	3	21	0	0	24	0	0	0	0	0	0	41	56	2	99	129
08:15 AM	6	0	0	0	6	8	21	0	0	29	0	0	0	0	0	0	46	63	0	109	144
08:30 AM	13	0	2	0	15	6	22	0	0	28	0	0	0	0	0	0	44	94	0	138	181
08:45 AM	11	0	2	0	13	9	32	0	0	41	0	0	0	0	0	0	50	103	0	153	207
Total	35	0	5	0	40	26	96	0	0	122	0	0	0	0	0	0	181	316	2	499	661
Grand Total	59	0	8	0	67	54	182	0	0	236	0	0	0	0	0	0	329	490	7	826	1129
Apprch %	88.1	0	11.9	0		22.9	77.1	0	0		0	0	0	0		0	39.8	59.3	0.8		
Total %	5.2	0	0.7	0	5.9	4.8	16.1	0	0	20.9	0	0	0	0	0	0	29.1	43.4	0.6	73.2	

	BORREGAS AVE Southbound				MOFFETT PARK DR Westbound				Northbound				MOFFETT PARK DR Eastbound				
Start Time	Right	Thru	Left	App. Total	Right	Thru	Left	App. Total	Right	Thru	Left	App. Total	Right	Thru	Left	App. Total	Int. Total
Peak Hour Analysis From 07:00 AM to 08:45 AM - Peak 1 of 1																	
Peak Hour for Entire Intersection Begins at 08:00 AM																	
08:00 AM	5	0	1	6	3	21	0	24	0	0	0	0	0	41	56	97	127
08:15 AM	6	0	0	6	8	21	0	29	0	0	0	0	0	46	63	109	144
08:30 AM	**13**	0	**2**	**15**	6	22	0	28	0	0	0	0	0	44	94	138	181
08:45 AM	11	0	2	13	**9**	**32**	0	**41**	0	0	0	0	0	**50**	**103**	**153**	**207**
Total Volume	35	0	5	40	26	96	0	122	0	0	0	0	0	181	316	497	659
% App. Total	87.5	0	12.5		21.3	78.7	0		0	0	0		0	36.4	63.6		
PHF	.673	.000	.625	.667	.722	.750	.000	.744	.000	.000	.000	.000	.000	.905	.767	.812	.796

Traffic Data Service

Campbell, CA
(408) 377-2988
tdsbay@cs.com

File Name : 1AM FINAL
Site Code : 00000001
Start Date : 3/14/2013
Page No : 2

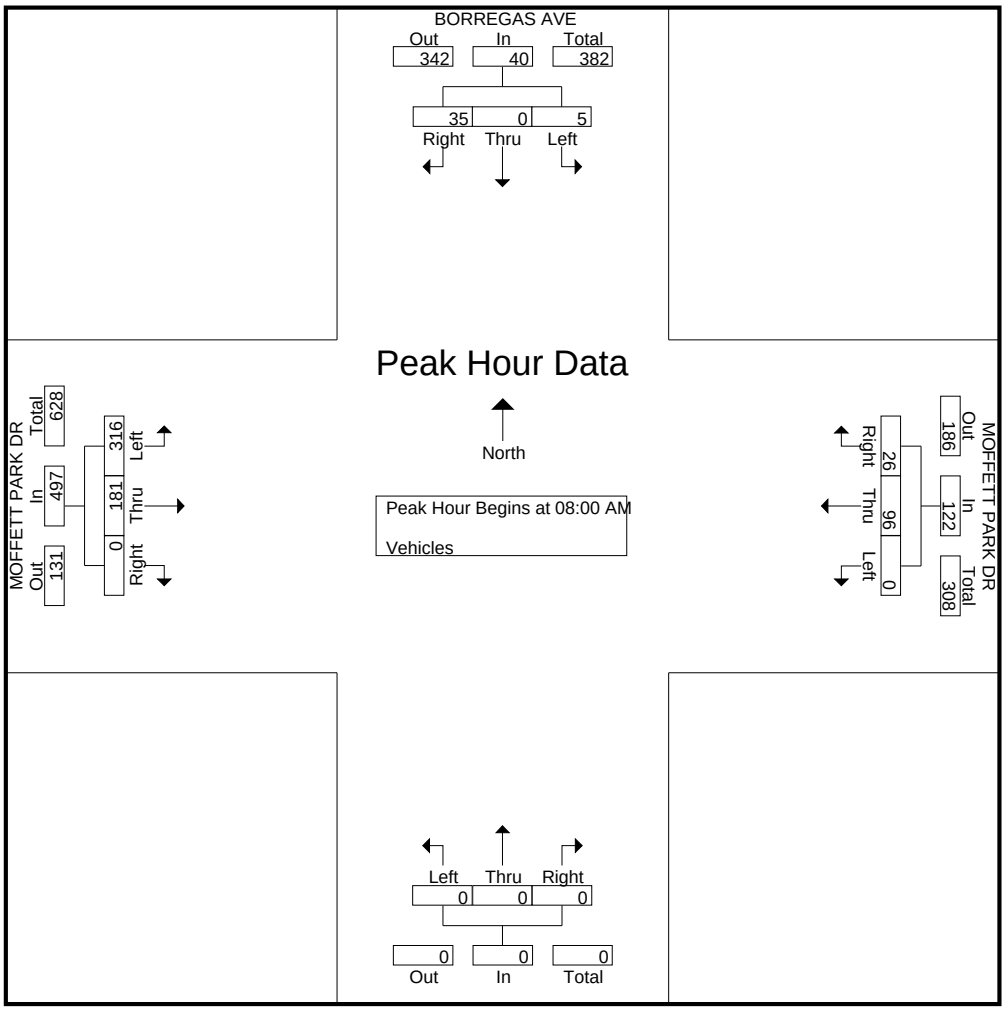

Traffic Data Service

Campbell, CA
(408) 377-2988
tdsbay@cs.com

File Name : 1AM FINAL
Site Code : 00000001
Start Date : 3/14/2013
Page No : 1

Groups Printed- Bikes

	BORREGAS AVE Southbound					MOFFETT PARK DR Westbound					Northbound					MOFFETT PARK DR Eastbound					
Start Time	Right	Thru	Left	Peds	App. Total	Right	Thru	Left	Peds	App. Total	Right	Thru	Left	Peds	App. Total	Right	Thru	Left	Peds	App. Total	Int. Total
07:00 AM	0	0	0	0	0	0	0	0	0	0	0	0	0	0	0	0	2	1	0	3	3
07:15 AM	0	0	0	0	0	0	0	0	0	0	0	0	0	0	0	0	0	0	0	0	0
07:30 AM	0	0	0	0	0	0	0	0	0	0	0	0	0	0	0	0	3	2	0	5	5
07:45 AM	0	0	0	0	0	0	2	0	0	2	0	0	0	0	0	0	3	2	0	5	7
Total	0	0	0	0	0	0	2	0	0	2	0	0	0	0	0	0	8	5	0	13	15
08:00 AM	0	0	0	0	0	0	4	0	0	4	0	0	0	0	0	0	1	1	0	2	6
08:15 AM	0	0	0	0	0	0	4	0	0	4	0	0	0	0	0	0	12	0	0	12	16
08:30 AM	0	0	0	0	0	0	1	0	0	1	0	0	0	0	0	0	3	5	0	8	9
08:45 AM	0	0	0	0	0	0	4	0	0	4	0	0	0	0	0	0	3	4	0	7	11
Total	0	0	0	0	0	0	13	0	0	13	0	0	0	0	0	0	19	10	0	29	42
Grand Total	0	0	0	0	0	0	15	0	0	15	0	0	0	0	0	0	27	15	0	42	57
Apprch %	0	0	0	0		0	100	0	0		0	0	0	0		0	64.3	35.7	0		
Total %	0	0	0	0	0	0	26.3	0	0	26.3	0	0	0	0	0	0	47.4	26.3	0	73.7	

	BORREGAS AVE Southbound				MOFFETT PARK DR Westbound				Northbound				MOFFETT PARK DR Eastbound				
Start Time	Right	Thru	Left	App. Total	Right	Thru	Left	App. Total	Right	Thru	Left	App. Total	Right	Thru	Left	App. Total	Int. Total
Peak Hour Analysis From 07:00 AM to 08:45 AM - Peak 1 of 1																	
Peak Hour for Entire Intersection Begins at 08:00 AM																	
08:00 AM	0	0	0	0	0	**4**	0	**4**	0	0	0	0	0	1	1	2	6
08:15 AM	0	0	0	0	0	4	0	4	0	0	0	0	0	**12**	0	**12**	**16**
08:30 AM	0	0	0	0	0	1	0	1	0	0	0	0	0	3	**5**	8	9
08:45 AM	0	0	0	0	0	4	0	4	0	0	0	0	0	3	4	7	11
Total Volume	0	0	0	0	0	13	0	13	0	0	0	0	0	19	10	29	42
% App. Total	0	0	0		0	100	0		0	0	0		0	65.5	34.5		
PHF	.000	.000	.000	.000	.000	.813	.000	.813	.000	.000	.000	.000	.000	.396	.500	.604	.656

Traffic Data Service

Campbell, CA
(408) 377-2988
tdsbay@cs.com

File Name : 1AM FINAL
Site Code : 00000001
Start Date : 3/14/2013
Page No : 2

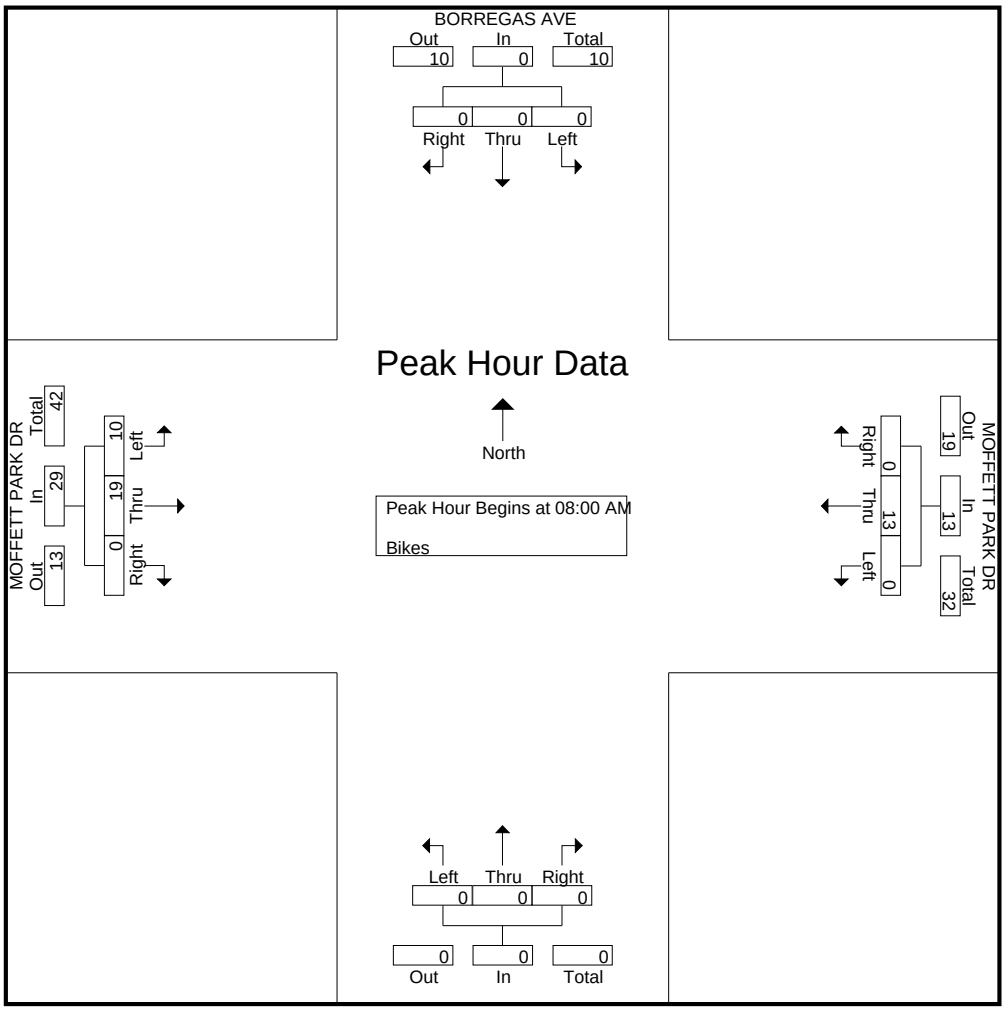

Traffic Data Service

Campbell, CA
(408) 377-2988
tdsbay@cs.com

File Name : 1PM FINAL
Site Code : 00000001
Start Date : 3/14/2013
Page No : 1

Groups Printed- Vehicles

	BORREGAS AVE Southbound					MOFFETT PARK DR Westbound					Northbound					MOFFETT PARK DR Eastbound					
Start Time	Right	Thru	Left	Peds	App. Total	Right	Thru	Left	Peds	App. Total	Right	Thru	Left	Peds	App. Total	Right	Thru	Left	Peds	App. Total	Int. Total
04:00 PM	34	0	12	0	46	2	34	0	0	36	0	0	0	0	0	0	31	37	0	68	150
04:15 PM	34	0	15	0	49	3	11	0	0	14	0	0	0	0	0	0	42	18	0	60	123
04:30 PM	54	0	20	0	74	3	24	0	0	27	0	0	0	0	0	0	34	13	0	47	148
04:45 PM	51	0	16	0	67	1	19	0	0	20	0	0	0	0	0	0	29	11	0	40	127
Total	173	0	63	0	236	9	88	0	0	97	0	0	0	0	0	0	136	79	0	215	548
05:00 PM	66	0	16	0	82	1	32	0	0	33	0	0	0	0	0	0	38	13	2	53	168
05:15 PM	45	0	12	0	57	0	16	0	0	16	0	0	0	0	0	0	60	8	1	69	142
05:30 PM	37	0	18	1	56	1	41	0	0	42	0	0	0	0	0	0	37	11	1	49	147
05:45 PM	50	0	13	0	63	3	37	0	0	40	0	0	0	0	0	0	45	15	2	62	165
Total	198	0	59	1	258	5	126	0	0	131	0	0	0	0	0	0	180	47	6	233	622
Grand Total	371	0	122	1	494	14	214	0	0	228	0	0	0	0	0	0	316	126	6	448	1170
Apprch %	75.1	0	24.7	0.2		6.1	93.9	0	0		0	0	0	0		0	70.5	28.1	1.3		
Total %	31.7	0	10.4	0.1	42.2	1.2	18.3	0	0	19.5	0	0	0	0	0	0	27	10.8	0.5	38.3	

	BORREGAS AVE Southbound				MOFFETT PARK DR Westbound				Northbound				MOFFETT PARK DR Eastbound				
Start Time	Right	Thru	Left	App. Total	Right	Thru	Left	App. Total	Right	Thru	Left	App. Total	Right	Thru	Left	App. Total	Int. Total
Peak Hour Analysis From 04:00 PM to 05:45 PM - Peak 1 of 1																	
Peak Hour for Entire Intersection Begins at 05:00 PM																	
05:00 PM	**66**	0	16	**82**	1	32	0	33	0	0	0	0	0	38	13	51	**166**
05:15 PM	45	0	12	57	0	16	0	16	0	0	0	0	0	**60**	8	**68**	141
05:30 PM	37	0	**18**	55	1	**41**	0	**42**	0	0	0	0	0	37	11	48	145
05:45 PM	50	0	13	63	**3**	37	0	40	0	0	0	0	0	45	**15**	60	163
Total Volume	198	0	59	257	5	126	0	131	0	0	0	0	0	180	47	227	615
% App. Total	77	0	23		3.8	96.2	0		0	0	0		0	79.3	20.7		
PHF	.750	.000	.819	.784	.417	.768	.000	.780	.000	.000	.000	.000	.000	.750	.783	.835	.926

Traffic Data Service

Campbell, CA
(408) 377-2988
tdsbay@cs.com

File Name : 1PM FINAL
Site Code : 00000001
Start Date : 3/14/2013
Page No : 2

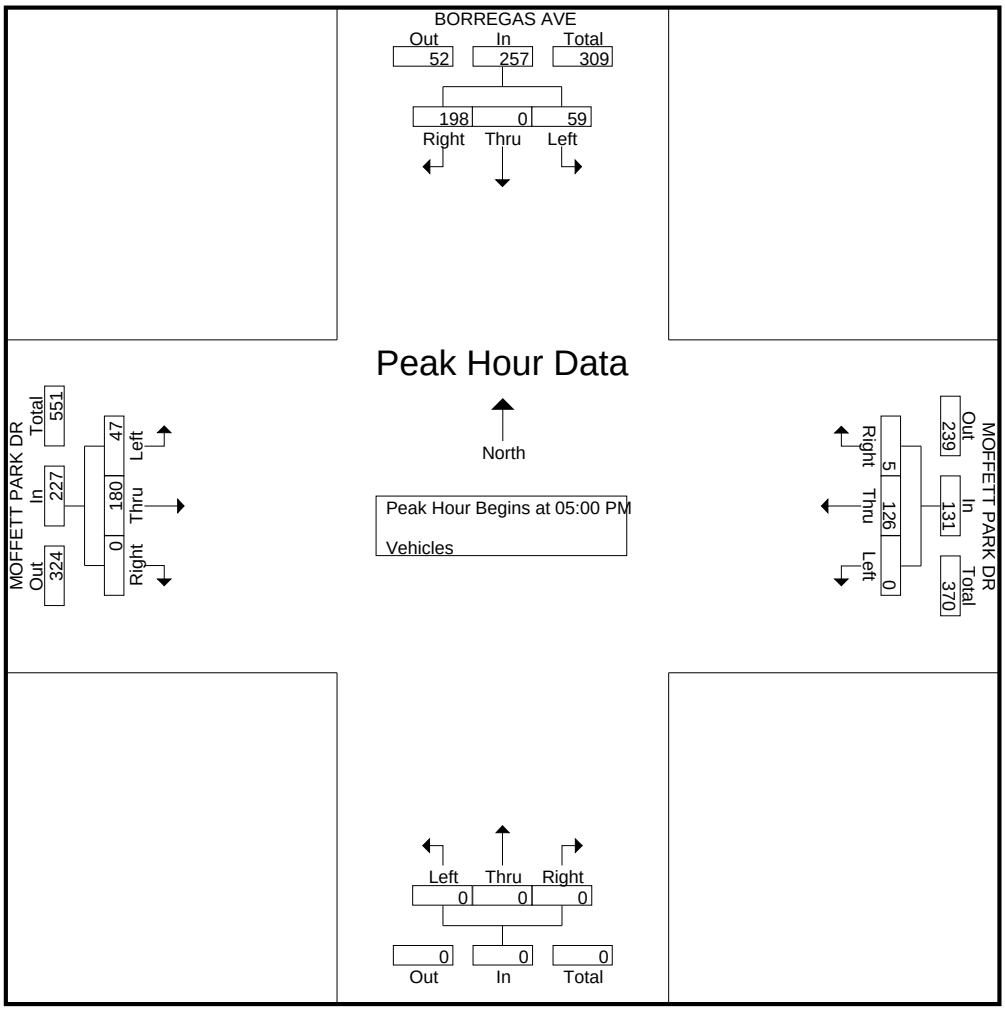

Traffic Data Service

Campbell, CA
(408) 377-2988
tdsbay@cs.com

File Name : 1PM FINAL
Site Code : 00000001
Start Date : 3/14/2013
Page No : 1

Groups Printed- Bikes

	BORREGAS AVE Southbound					MOFFETT PARK DR Westbound					Northbound					MOFFETT PARK DR Eastbound					
Start Time	Right	Thru	Left	Peds	App. Total	Right	Thru	Left	Peds	App. Total	Right	Thru	Left	Peds	App. Total	Right	Thru	Left	Peds	App. Total	Int. Total
04:00 PM	0	0	0	0	0	0	1	0	0	1	0	0	0	0	0	0	0	0	0	0	1
04:15 PM	0	0	0	0	0	1	3	0	0	4	0	0	0	0	0	0	0	0	0	0	4
04:30 PM	2	0	0	0	2	0	2	0	0	2	0	0	0	0	0	0	1	0	0	1	5
04:45 PM	0	0	0	0	0	0	0	0	0	0	0	0	0	0	0	0	2	0	0	2	2
Total	2	0	0	0	2	1	6	0	0	7	0	0	0	0	0	0	3	0	0	3	12
05:00 PM	2	0	0	0	2	0	3	0	0	3	0	0	0	0	0	0	2	0	0	2	7
05:15 PM	3	0	0	0	3	0	3	0	0	3	0	0	0	0	0	0	1	0	0	1	7
05:30 PM	1	0	0	0	1	0	8	0	0	8	0	0	0	0	0	0	3	0	0	3	12
05:45 PM	0	0	0	0	0	0	2	0	0	2	0	0	0	0	0	0	2	1	0	3	5
Total	6	0	0	0	6	0	16	0	0	16	0	0	0	0	0	0	8	1	0	9	31
Grand Total	8	0	0	0	8	1	22	0	0	23	0	0	0	0	0	0	11	1	0	12	43
Apprch %	100	0	0	0		4.3	95.7	0	0		0	0	0	0		0	91.7	8.3	0		
Total %	18.6	0	0	0	18.6	2.3	51.2	0	0	53.5	0	0	0	0	0	0	25.6	2.3	0	27.9	

	BORREGAS AVE Southbound				MOFFETT PARK DR Westbound				Northbound				MOFFETT PARK DR Eastbound				
Start Time	Right	Thru	Left	App. Total	Right	Thru	Left	App. Total	Right	Thru	Left	App. Total	Right	Thru	Left	App. Total	Int. Total
Peak Hour Analysis From 04:00 PM to 05:45 PM - Peak 1 of 1																	
Peak Hour for Entire Intersection Begins at 05:00 PM																	
05:00 PM	2	0	0	2	0	3	0	3	0	0	0	0	0	2	0	2	7
05:15 PM	**3**	0	0	**3**	0	3	0	3	0	0	0	0	0	1	0	1	7
05:30 PM	1	0	0	1	0	**8**	0	**8**	0	0	0	0	0	**3**	0	**3**	**12**
05:45 PM	0	0	0	0	0	2	0	2	0	0	0	0	0	2	**1**	3	5
Total Volume	6	0	0	6	0	16	0	16	0	0	0	0	0	8	1	9	31
% App. Total	100	0	0		0	100	0		0	0	0		0	88.9	11.1		
PHF	.500	.000	.000	.500	.000	.500	.000	.500	.000	.000	.000	.000	.000	.667	.250	.750	.646

Traffic Data Service

Campbell, CA
(408) 377-2988
tdsbay@cs.com

File Name : 1PM FINAL
Site Code : 00000001
Start Date : 3/14/2013
Page No : 2

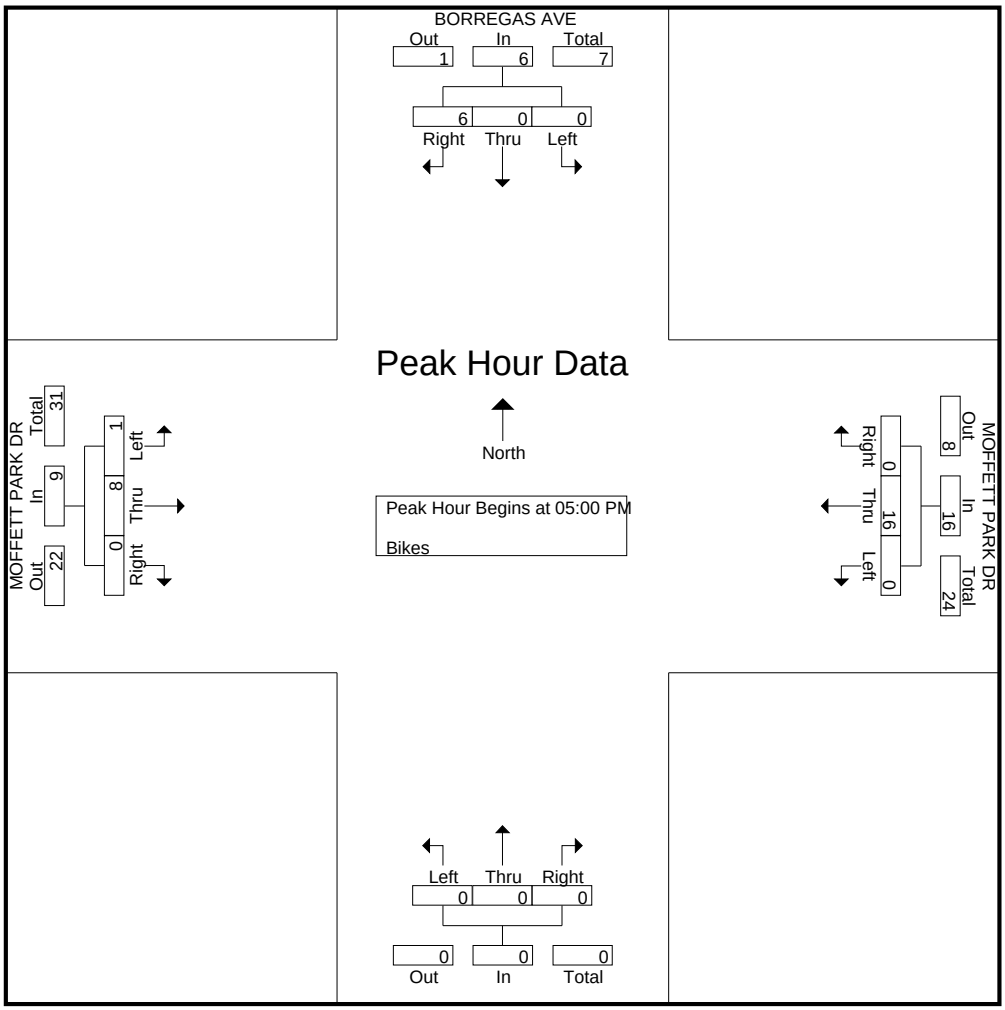

Traffic Data Service

Campbell, CA
(408) 377-2988
tdsbay@cs.com

File Name : 2AM FINAL
Site Code : 00000002
Start Date : 3/14/2013
Page No : 1

Groups Printed- Vehicles

	LAWRENCE EXPY Southbound					SANDIA AVE Westbound					LAWRENCE EXPY Northbound					LAKEHAVEN DR Eastbound					
Start Time	Right	Thru	Left	Peds	App. Total	Right	Thru	Left	Peds	App. Total	Right	Thru	Left	Peds	App. Total	Right	Thru	Left	Peds	App. Total	Int. Total
07:00 AM	4	216	10	0	230	1	19	83	0	103	7	284	33	4	328	49	7	8	0	64	725
07:15 AM	1	258	13	0	272	7	28	62	0	97	24	453	72	5	554	70	4	11	0	85	1008
07:30 AM	3	277	12	0	292	9	17	74	0	100	19	405	65	2	491	76	11	15	0	102	985
07:45 AM	5	348	29	3	385	8	24	85	0	117	54	564	92	0	710	98	7	25	1	131	1343
Total	13	1099	64	3	1179	25	88	304	0	417	104	1706	262	11	2083	293	29	59	1	382	4061
08:00 AM	0	303	10	3	316	5	32	90	0	127	15	575	70	3	663	93	11	38	1	143	1249
08:15 AM	1	258	5	3	267	10	13	66	1	90	17	557	44	4	622	43	9	18	0	70	1049
08:30 AM	4	313	10	1	328	6	8	76	1	91	24	581	61	4	670	44	5	9	0	58	1147
08:45 AM	4	351	21	1	377	8	10	64	0	82	26	691	73	1	791	49	7	21	0	77	1327
Total	9	1225	46	8	1288	29	63	296	2	390	82	2404	248	12	2746	229	32	86	1	348	4772
Grand Total	22	2324	110	11	2467	54	151	600	2	807	186	4110	510	23	4829	522	61	145	2	730	8833
Apprch %	0.9	94.2	4.5	0.4		6.7	18.7	74.3	0.2		3.9	85.1	10.6	0.5		71.5	8.4	19.9	0.3		
Total %	0.2	26.3	1.2	0.1	27.9	0.6	1.7	6.8	0	9.1	2.1	46.5	5.8	0.3	54.7	5.9	0.7	1.6	0	8.3	

	LAWRENCE EXPY Southbound				SANDIA AVE Westbound				LAWRENCE EXPY Northbound				LAKEHAVEN DR Eastbound				
Start Time	Right	Thru	Left	App. Total	Right	Thru	Left	App. Total	Right	Thru	Left	App. Total	Right	Thru	Left	App. Total	Int. Total
Peak Hour Analysis From 07:00 AM to 08:45 AM - Peak 1 of 1																	
Peak Hour for Entire Intersection Begins at 07:45 AM																	
07:45 AM	**5**	**348**	**29**	**382**	8	24	85	117	**54**	564	**92**	**710**	**98**	7	25	130	**1339**
08:00 AM	0	303	10	313	5	**32**	**90**	**127**	15	575	70	660	93	**11**	**38**	**142**	1242
08:15 AM	1	258	5	264	**10**	13	66	89	17	557	44	618	43	9	18	70	1041
08:30 AM	4	313	10	327	6	8	76	90	24	**581**	61	666	44	5	9	58	1141
Total Volume	10	1222	54	1286	29	77	317	423	110	2277	267	2654	278	32	90	400	4763
% App. Total	0.8	95	4.2		6.9	18.2	74.9		4.1	85.8	10.1		69.5	8	22.5		
PHF	.500	.878	.466	.842	.725	.602	.881	.833	.509	.980	.726	.935	.709	.727	.592	.704	.889

Traffic Data Service

Campbell, CA
(408) 377-2988
tdsbay@cs.com

File Name : 2AM FINAL
Site Code : 00000002
Start Date : 3/14/2013
Page No : 2

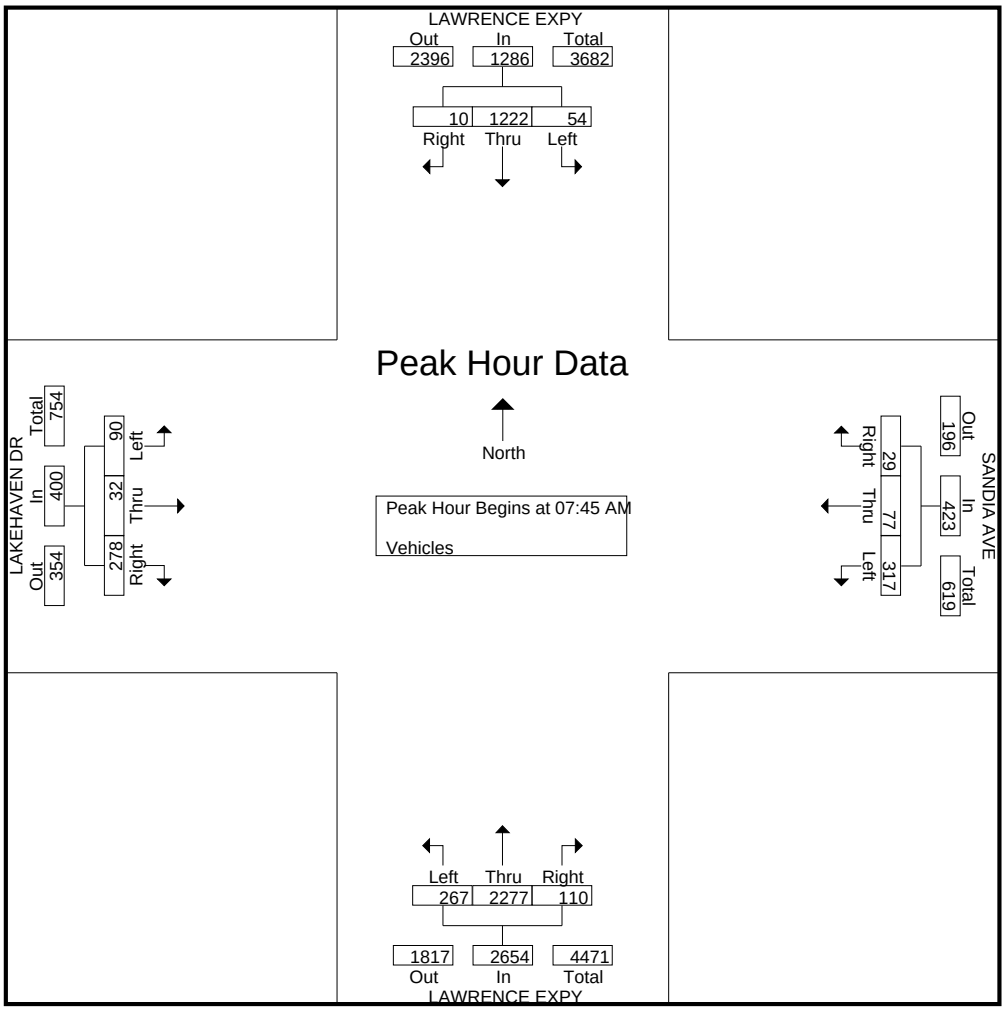

Traffic Data Service

Campbell, CA
(408) 377-2988
tdsbay@cs.com

File Name : 2AM FINAL
Site Code : 00000002
Start Date : 3/14/2013
Page No : 1

Groups Printed- Bikes

	LAWRENCE EXPY Southbound					SANDIA AVE Westbound					LAWRENCE EXPY Northbound					LAKEHAVEN DR Eastbound					
Start Time	Right	Thru	Left	Peds	App. Total	Right	Thru	Left	Peds	App. Total	Right	Thru	Left	Peds	App. Total	Right	Thru	Left	Peds	App. Total	Int. Total
07:00 AM	0	0	0	0	0	0	1	0	0	1	0	0	0	0	0	0	0	0	0	0	1
07:15 AM	0	0	0	0	0	0	0	0	0	0	0	0	0	0	0	0	0	0	0	0	0
07:30 AM	1	0	0	0	1	0	2	0	0	2	0	0	0	0	0	0	0	0	0	0	3
07:45 AM	0	1	0	0	1	0	0	0	0	0	0	0	0	0	0	0	0	0	0	0	1
Total	1	1	0	0	2	0	3	0	0	3	0	0	0	0	0	0	0	0	0	0	5
08:00 AM	0	1	0	0	1	0	0	0	0	0	0	0	0	0	0	0	0	0	0	0	1
08:15 AM	0	0	0	0	0	0	0	0	0	0	0	0	1	0	1	0	0	0	0	0	1
08:30 AM	0	0	0	0	0	0	0	0	0	0	0	0	0	0	0	0	1	0	0	1	1
08:45 AM	0	0	0	0	0	0	1	0	0	1	0	0	0	0	0	0	0	0	0	0	1
Total	0	1	0	0	1	0	1	0	0	1	0	0	1	0	1	0	1	0	0	1	4
Grand Total	1	2	0	0	3	0	4	0	0	4	0	0	1	0	1	0	1	0	0	1	9
Apprch %	33.3	66.7	0	0		0	100	0	0		0	0	100	0		0	100	0	0		
Total %	11.1	22.2	0	0	33.3	0	44.4	0	0	44.4	0	0	11.1	0	11.1	0	11.1	0	0	11.1	

	LAWRENCE EXPY Southbound				SANDIA AVE Westbound				LAWRENCE EXPY Northbound				LAKEHAVEN DR Eastbound				
Start Time	Right	Thru	Left	App. Total	Right	Thru	Left	App. Total	Right	Thru	Left	App. Total	Right	Thru	Left	App. Total	Int. Total
Peak Hour Analysis From 07:00 AM to 08:45 AM - Peak 1 of 1																	
Peak Hour for Entire Intersection Begins at 07:30 AM																	
07:30 AM	**1**	0	0	**1**	0	**2**	0	**2**	0	0	0	0	0	0	0	0	**3**
07:45 AM	0	**1**	0	1	0	0	0	0	0	0	0	0	0	0	0	0	1
08:00 AM	0	1	0	1	0	0	0	0	0	0	0	0	0	0	0	0	1
08:15 AM	0	0	0	0	0	0	0	0	0	0	**1**	**1**	0	0	0	0	1
Total Volume	1	2	0	3	0	2	0	2	0	0	1	1	0	0	0	0	6
% App. Total	33.3	66.7	0		0	100	0		0	0	100		0	0	0		
PHF	.250	.500	.000	.750	.000	.250	.000	.250	.000	.000	.250	.250	.000	.000	.000	.000	.500

Traffic Data Service

Campbell, CA
(408) 377-2988
tdsbay@cs.com

File Name : 2AM FINAL
Site Code : 00000002
Start Date : 3/14/2013
Page No : 2

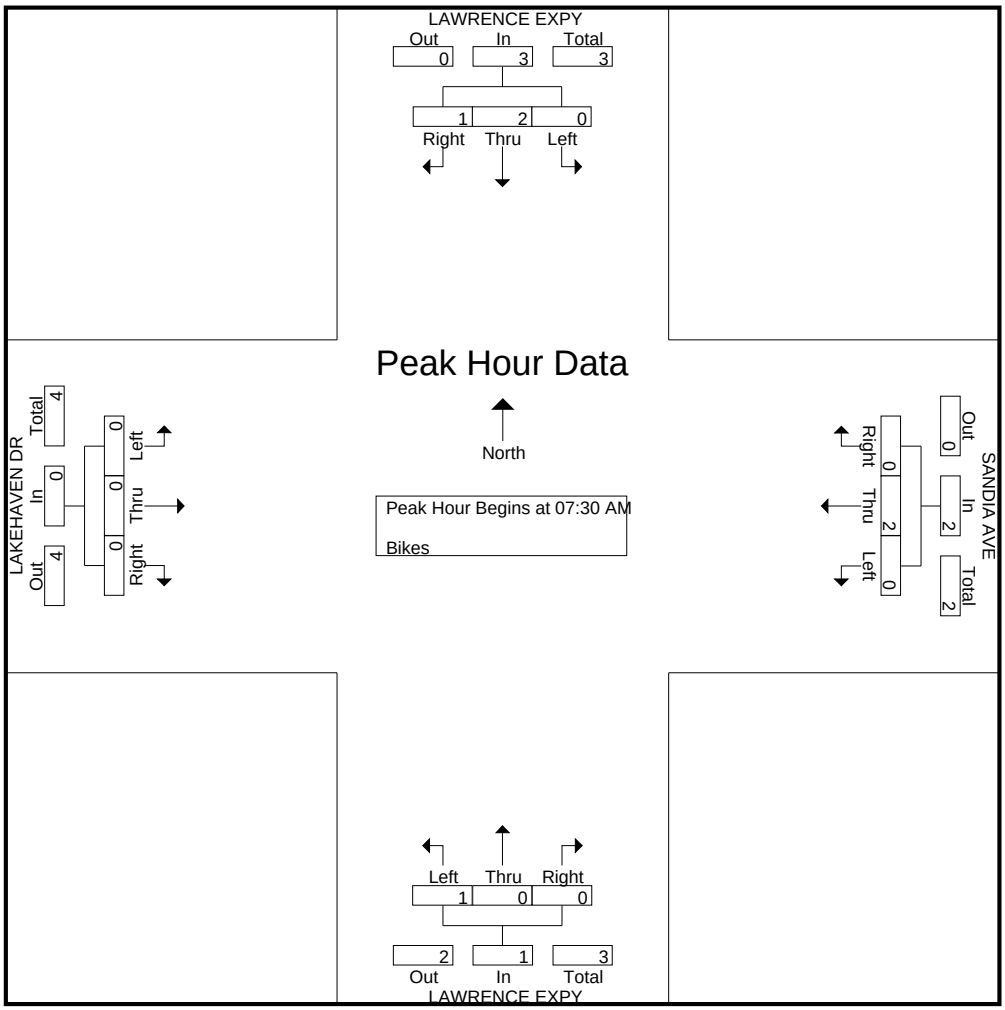

Traffic Data Service

Campbell, CA
(408) 377-2988
tdsbay@cs.com

File Name : 2PM FINAL
Site Code : 00000002
Start Date : 3/14/2013
Page No : 1

Groups Printed- Vehicles

	LAWRENCE EXPY Southbound					SANDIA AVE Westbound					LAWRENCE EXPY Northbound					LAKEHAVEN DR Eastbound					
Start Time	Right	Thru	Left	Peds	App. Total	Right	Thru	Left	Peds	App. Total	Right	Thru	Left	Peds	App. Total	Right	Thru	Left	Peds	App. Total	Int. Total
04:00 PM	3	400	23	7	433	7	18	41	0	66	38	357	101	0	496	51	7	19	0	77	1072
04:15 PM	9	427	27	4	467	5	18	43	0	66	31	274	80	1	386	45	7	21	1	74	993
04:30 PM	13	438	21	2	474	8	19	55	0	82	31	282	117	4	434	48	11	17	0	76	1066
04:45 PM	15	503	37	5	560	4	24	50	0	78	42	309	113	1	465	45	14	28	0	87	1190
Total	40	1768	108	18	1934	24	79	189	0	292	142	1222	411	6	1781	189	39	85	1	314	4321
05:00 PM	3	540	35	7	585	7	27	39	0	73	45	339	124	0	508	49	15	18	0	82	1248
05:15 PM	6	527	30	1	564	9	23	57	0	89	35	368	152	0	555	59	18	29	0	106	1314
05:30 PM	9	555	32	0	596	9	35	37	0	81	34	325	108	0	467	45	15	22	0	82	1226
05:45 PM	14	515	26	0	555	6	22	32	0	60	45	323	144	0	512	52	12	17	0	81	1208
Total	32	2137	123	8	2300	31	107	165	0	303	159	1355	528	0	2042	205	60	86	0	351	4996
Grand Total	72	3905	231	26	4234	55	186	354	0	595	301	2577	939	6	3823	394	99	171	1	665	9317
Apprch %	1.7	92.2	5.5	0.6		9.2	31.3	59.5	0		7.9	67.4	24.6	0.2		59.2	14.9	25.7	0.2		
Total %	0.8	41.9	2.5	0.3	45.4	0.6	2	3.8	0	6.4	3.2	27.7	10.1	0.1	41	4.2	1.1	1.8	0	7.1	

	LAWRENCE EXPY Southbound				SANDIA AVE Westbound				LAWRENCE EXPY Northbound				LAKEHAVEN DR Eastbound				
Start Time	Right	Thru	Left	App. Total	Right	Thru	Left	App. Total	Right	Thru	Left	App. Total	Right	Thru	Left	App. Total	Int. Total
Peak Hour Analysis From 04:00 PM to 05:45 PM - Peak 1 of 1																	
Peak Hour for Entire Intersection Begins at 05:00 PM																	
05:00 PM	3	540	**35**	578	7	27	39	73	**45**	339	124	508	49	15	18	82	1241
05:15 PM	6	527	30	563	**9**	23	**57**	**89**	35	**368**	**152**	**555**	**59**	**18**	**29**	**106**	**1313**
05:30 PM	9	**555**	32	**596**	9	**35**	37	81	34	325	108	467	45	15	22	82	1226
05:45 PM	**14**	515	26	555	6	22	32	60	45	323	144	512	52	12	17	81	1208
Total Volume	32	2137	123	2292	31	107	165	303	159	1355	528	2042	205	60	86	351	4988
% App. Total	1.4	93.2	5.4		10.2	35.3	54.5		7.8	66.4	25.9		58.4	17.1	24.5		
PHF	.571	.963	.879	.961	.861	.764	.724	.851	.883	.921	.868	.920	.869	.833	.741	.828	.950

Traffic Data Service

Campbell, CA
(408) 377-2988
tdsbay@cs.com

File Name : 2PM FINAL
Site Code : 00000002
Start Date : 3/14/2013
Page No : 2

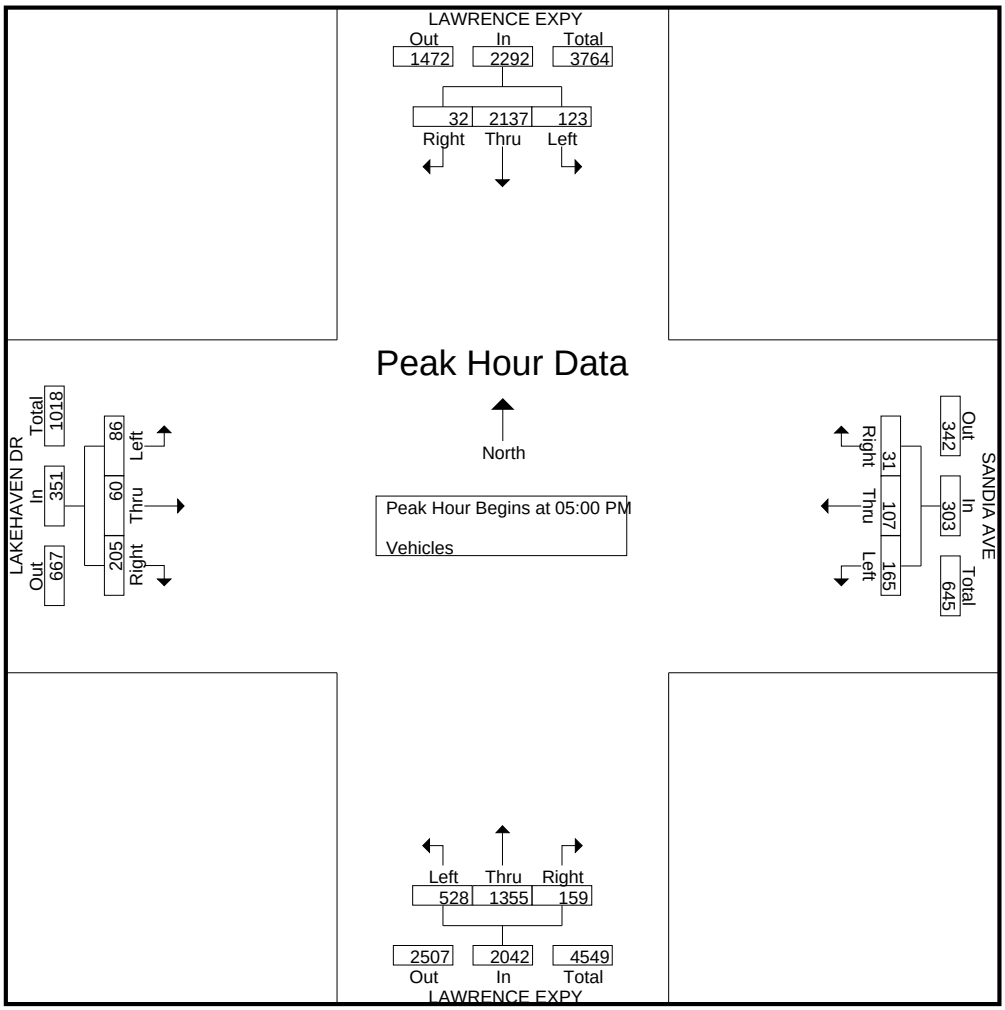

Traffic Data Service

Campbell, CA
(408) 377-2988
tdsbay@cs.com

File Name : 2PM FINAL
Site Code : 00000002
Start Date : 3/14/2013
Page No : 1

Groups Printed- Bikes

	LAWRENCE EXPY Southbound					SANDIA AVE Westbound					LAWRENCE EXPY Northbound					LAKEHAVEN DR Eastbound					
Start Time	Right	Thru	Left	Peds	App. Total	Right	Thru	Left	Peds	App. Total	Right	Thru	Left	Peds	App. Total	Right	Thru	Left	Peds	App. Total	Int. Total
04:00 PM	0	0	0	0	0	0	1	0	0	1	0	0	0	0	0	0	0	0	0	0	1
04:15 PM	0	0	0	0	0	0	0	0	0	0	0	0	0	0	0	0	1	0	0	1	1
04:30 PM	1	0	0	0	1	0	0	0	0	0	0	0	0	0	0	0	0	0	0	0	1
04:45 PM	0	0	0	0	0	0	0	0	0	0	0	0	0	0	0	0	0	0	0	0	0
Total	1	0	0	0	1	0	1	0	0	1	0	0	0	0	0	0	1	0	0	1	3
05:00 PM	1	0	0	0	1	0	0	0	0	0	0	0	0	0	0	1	1	0	0	2	3
05:15 PM	0	2	0	0	2	0	0	0	0	0	0	0	0	0	0	0	2	0	0	2	4
05:30 PM	0	1	0	0	1	0	0	0	0	0	0	0	0	0	0	0	0	0	0	0	1
05:45 PM	0	0	0	0	0	0	0	1	0	1	0	0	0	0	0	0	1	0	0	1	2
Total	1	3	0	0	4	0	0	1	0	1	0	0	0	0	0	1	4	0	0	5	10
Grand Total	2	3	0	0	5	0	1	1	0	2	0	0	0	0	0	1	5	0	0	6	13
Apprch %	40	60	0	0		0	50	50	0		0	0	0	0		16.7	83.3	0	0		
Total %	15.4	23.1	0	0	38.5	0	7.7	7.7	0	15.4	0	0	0	0	0	7.7	38.5	0	0	46.2	

	LAWRENCE EXPY Southbound				SANDIA AVE Westbound				LAWRENCE EXPY Northbound				LAKEHAVEN DR Eastbound				
Start Time	Right	Thru	Left	App. Total	Right	Thru	Left	App. Total	Right	Thru	Left	App. Total	Right	Thru	Left	App. Total	Int. Total
Peak Hour Analysis From 04:00 PM to 05:45 PM - Peak 1 of 1																	
Peak Hour for Entire Intersection Begins at 05:00 PM																	
05:00 PM	**1**	0	0	1	0	0	0	0	0	0	0	0	**1**	1	0	**2**	3
05:15 PM	0	**2**	0	**2**	0	0	0	0	0	0	0	0	0	**2**	0	2	**4**
05:30 PM	0	1	0	1	0	0	0	0	0	0	0	0	0	0	0	0	1
05:45 PM	0	0	0	0	0	0	**1**	**1**	0	0	0	0	0	1	0	1	2
Total Volume	1	3	0	4	0	0	1	1	0	0	0	0	1	4	0	5	10
% App. Total	25	75	0		0	0	100		0	0	0		20	80	0		
PHF	.250	.375	.000	.500	.000	.000	.250	.250	.000	.000	.000	.000	.250	.500	.000	.625	.625

Traffic Data Service

Campbell, CA
(408) 377-2988
tdsbay@cs.com

File Name : 2PM FINAL
Site Code : 00000002
Start Date : 3/14/2013
Page No : 2

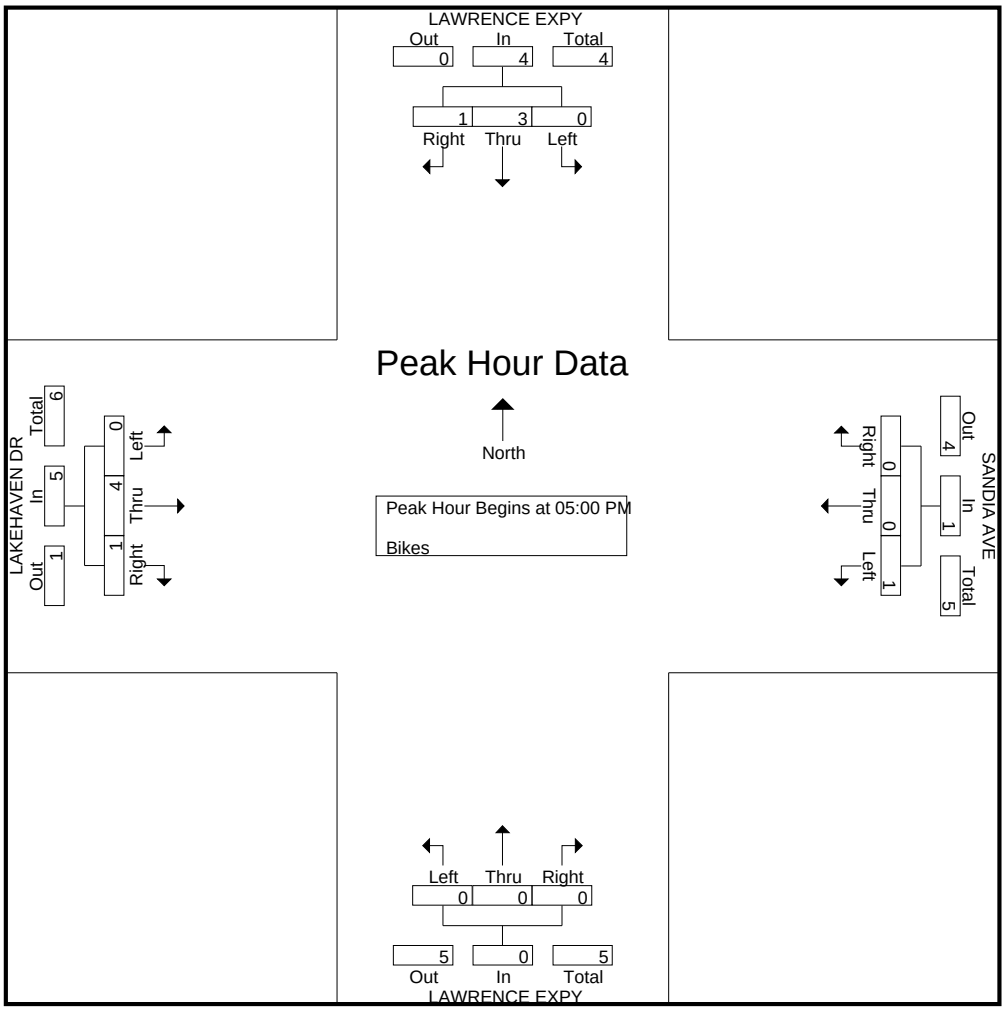

Traffic Data Service

Campbell, CA
(408) 377-2988
tdsbay@cs.com

File Name : 18AM FINAL
Site Code : 00000018
Start Date : 2/28/2013
Page No : 1

Groups Printed- Vehicles

	LAWRENCE EXPY Southbound					ELKO DR Westbound					LAWRENCE EXPY Northbound					PERSIAN DR Eastbound					
Start Time	Right	Thru	Left	Peds	App. Total	Right	Thru	Left	Peds	App. Total	Right	Thru	Left	Peds	App. Total	Right	Thru	Left	Peds	App. Total	Int. Total
07:00 AM	2	168	18	1	189	54	1	17	0	72	24	244	5	0	273	2	9	4	1	16	550
07:15 AM	2	182	33	0	217	43	1	18	0	62	21	340	6	0	367	4	8	9	0	21	667
07:30 AM	4	207	23	0	234	52	1	20	0	73	14	414	4	0	432	11	8	11	2	32	771
07:45 AM	7	226	27	0	260	71	2	16	0	89	17	448	2	0	467	11	10	16	0	37	853
Total	15	783	101	1	900	220	5	71	0	296	76	1446	17	0	1539	28	35	40	3	106	2841
08:00 AM	6	192	37	0	235	47	0	26	0	73	26	507	1	0	534	9	16	16	0	41	883
08:15 AM	5	249	34	0	288	67	1	28	0	96	23	540	2	0	565	5	11	15	0	31	980
08:30 AM	10	221	36	1	268	92	2	14	0	108	32	549	1	0	582	8	20	14	0	42	1000
08:45 AM	6	185	49	0	240	117	5	38	0	160	27	421	3	0	451	9	9	14	0	32	883
Total	27	847	156	1	1031	323	8	106	0	437	108	2017	7	0	2132	31	56	59	0	146	3746
Grand Total	42	1630	257	2	1931	543	13	177	0	733	184	3463	24	0	3671	59	91	99	3	252	6587
Apprch %	2.2	84.4	13.3	0.1		74.1	1.8	24.1	0		5	94.3	0.7	0		23.4	36.1	39.3	1.2		
Total %	0.6	24.7	3.9	0	29.3	8.2	0.2	2.7	0	11.1	2.8	52.6	0.4	0	55.7	0.9	1.4	1.5	0	3.8	

	LAWRENCE EXPY Southbound					ELKO DR Westbound					LAWRENCE EXPY Northbound					PERSIAN DR Eastbound					
Start Time	Right	Thru	Left	Peds	App. Total	Right	Thru	Left	Peds	App. Total	Right	Thru	Left	Peds	App. Total	Right	Thru	Left	Peds	App. Total	Int. Total
Peak Hour Analysis From 07:00 AM to 08:45 AM - Peak 1 of 1																					
Peak Hour for Entire Intersection Begins at 08:00 AM																					
08:00 AM	6	192	37	0	235	47	0	26	0	73	26	507	1	0	534	**9**	16	**16**	0	41	883
08:15 AM	5	**249**	34	0	**288**	67	1	28	0	96	23	540	2	0	565	5	11	15	0	31	980
08:30 AM	**10**	221	36	**1**	268	92	2	14	0	108	**32**	**549**	1	0	**582**	8	**20**	14	0	**42**	**1000**
08:45 AM	6	185	**49**	0	240	**117**	**5**	**38**	0	**160**	27	421	**3**	0	451	9	9	14	0	32	883
Total Volume	27	847	156	1	1031	323	8	106	0	437	108	2017	7	0	2132	31	56	59	0	146	3746
% App. Total	2.6	82.2	15.1	0.1		73.9	1.8	24.3	0		5.1	94.6	0.3	0		21.2	38.4	40.4	0		
PHF	.675	.850	.796	.250	.895	.690	.400	.697	.000	.683	.844	.918	.583	.000	.916	.861	.700	.922	.000	.869	.937

Traffic Data Service

Campbell, CA
(408) 377-2988
tdsbay@cs.com

File Name : 18AM FINAL
Site Code : 00000018
Start Date : 2/28/2013
Page No : 2

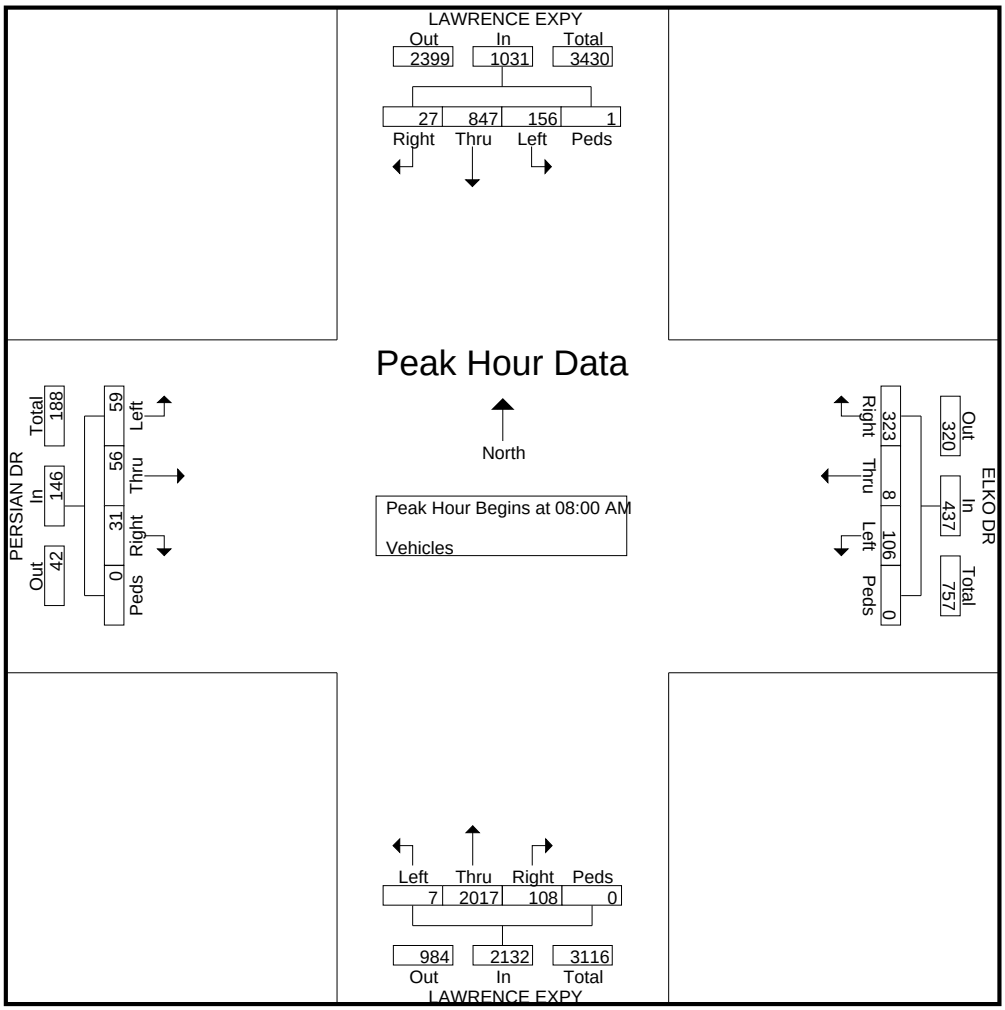

Traffic Data Service

Campbell, CA
(408) 377-2988
tdsbay@cs.com

File Name : 18AM FINAL
Site Code : 00000018
Start Date : 2/28/2013
Page No : 1

Groups Printed- Bikes

	LAWRENCE EXPY Southbound					ELKO DR Westbound					LAWRENCE EXPY Northbound					PERSIAN DR Eastbound					
Start Time	Right	Thru	Left	Peds	App. Total	Right	Thru	Left	Peds	App. Total	Right	Thru	Left	Peds	App. Total	Right	Thru	Left	Peds	App. Total	Int. Total
07:00 AM	0	0	0	0	0	0	1	0	0	1	0	0	0	0	0	0	0	0	0	0	1
07:15 AM	0	0	0	0	0	0	0	0	0	0	0	0	0	0	0	0	0	0	0	0	0
07:30 AM	0	0	0	0	0	0	0	0	0	0	0	0	0	0	0	0	1	0	0	1	1
07:45 AM	0	0	0	0	0	0	1	0	0	1	0	0	0	0	0	0	1	0	0	1	2
Total	0	0	0	0	0	0	2	0	0	2	0	0	0	0	0	0	2	0	0	2	4
08:00 AM	0	0	0	0	0	0	0	0	0	0	0	0	0	0	0	0	1	0	0	1	1
08:15 AM	0	1	0	0	1	0	0	0	0	0	0	0	0	0	0	0	0	0	0	0	1
08:30 AM	1	0	0	1	2	0	0	0	0	0	0	0	0	0	0	0	1	0	0	1	3
08:45 AM	0	0	0	0	0	0	0	0	0	0	0	0	0	0	0	1	2	0	0	3	3
Total	1	1	0	1	3	0	0	0	0	0	0	0	0	0	0	1	4	0	0	5	8
Grand Total	1	1	0	1	3	0	2	0	0	2	0	0	0	0	0	1	6	0	0	7	12
Apprch %	33.3	33.3	0	33.3		0	100	0	0		0	0	0	0		14.3	85.7	0	0		
Total %	8.3	8.3	0	8.3	25	0	16.7	0	0	16.7	0	0	0	0	0	8.3	50	0	0	58.3	

	LAWRENCE EXPY Southbound					ELKO DR Westbound					LAWRENCE EXPY Northbound					PERSIAN DR Eastbound					
Start Time	Right	Thru	Left	Peds	App. Total	Right	Thru	Left	Peds	App. Total	Right	Thru	Left	Peds	App. Total	Right	Thru	Left	Peds	App. Total	Int. Total
Peak Hour Analysis From 07:00 AM to 08:45 AM - Peak 1 of 1																					
Peak Hour for Entire Intersection Begins at 08:00 AM																					
08:00 AM	0	0	0	0	0	0	0	0	0	0	0	0	0	0	0	0	1	0	0	1	1
08:15 AM	0	**1**	0	0	1	0	0	0	0	0	0	0	0	0	0	0	0	0	0	0	1
08:30 AM	**1**	0	0	**1**	**2**	0	0	0	0	0	0	0	0	0	0	0	1	0	0	1	**3**
08:45 AM	0	0	0	0	0	0	0	0	0	0	0	0	0	0	0	**1**	**2**	0	0	**3**	3
Total Volume	1	1	0	1	3	0	0	0	0	0	0	0	0	0	0	1	4	0	0	5	8
% App. Total	33.3	33.3	0	33.3		0	0	0	0		0	0	0	0		20	80	0	0		
PHF	.250	.250	.000	.250	.375	.000	.000	.000	.000	.000	.000	.000	.000	.000	.000	.250	.500	.000	.000	.417	.667

Traffic Data Service

Campbell, CA
(408) 377-2988
tdsbay@cs.com

File Name : 18AM FINAL
Site Code : 00000018
Start Date : 2/28/2013
Page No : 2

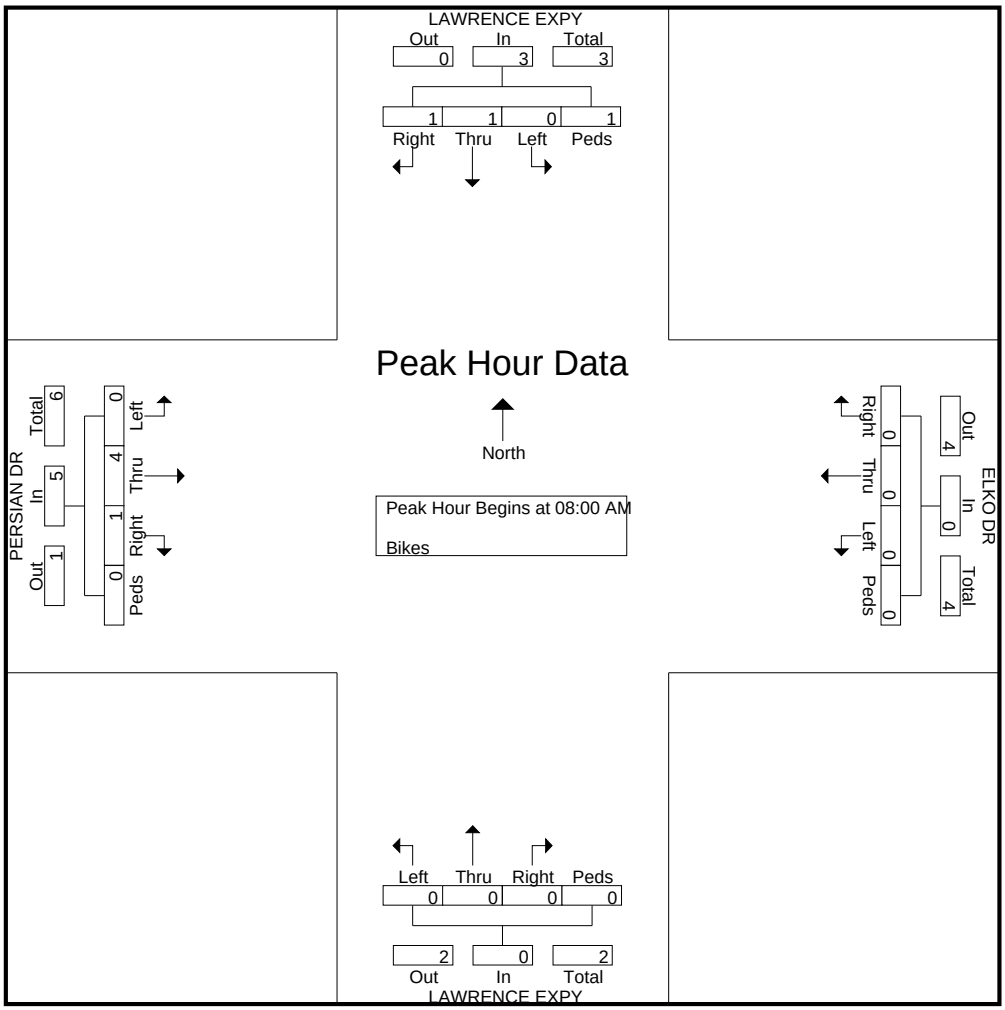

Traffic Data Service

Campbell, CA
(408) 377-2988
tdsbay@cs.com

File Name : 18PM FINAL
Site Code : 00000018
Start Date : 2/28/2013
Page No : 1

Groups Printed- Vehicles

	LAWRENCE EXPY Southbound					ELKO DR Westbound					LAWRENCE EXPY Northbound					PERSIAN DR Eastbound					
Start Time	Right	Thru	Left	Peds	App. Total	Right	Thru	Left	Peds	App. Total	Right	Thru	Left	Peds	App. Total	Right	Thru	Left	Peds	App. Total	Int. Total
04:30 PM	10	409	44	1	464	50	5	36	0	91	12	196	3	0	211	17	18	7	1	43	809
04:45 PM	14	410	70	0	494	62	7	49	0	118	27	192	4	0	223	10	14	10	0	34	869
Total	24	819	114	1	958	112	12	85	0	209	39	388	7	0	434	27	32	17	1	77	1678
05:00 PM	12	480	70	2	564	70	9	45	0	124	23	234	5	0	262	17	28	16	0	61	1011
05:15 PM	21	501	107	1	630	56	11	33	0	100	8	210	5	0	223	11	33	8	0	52	1005
05:30 PM	20	487	93	1	601	56	8	47	0	111	17	229	5	0	251	12	36	5	0	53	1016
05:45 PM	14	451	61	0	526	61	8	52	0	121	12	151	2	0	165	12	37	8	2	59	871
Total	67	1919	331	4	2321	243	36	177	0	456	60	824	17	0	901	52	134	37	2	225	3903
06:00 PM	19	431	70	0	520	47	10	50	0	107	21	253	5	0	279	11	24	6	0	41	947
06:15 PM	16	429	67	0	512	46	11	43	0	100	14	241	6	0	261	3	23	8	0	34	907
Grand Total	126	3598	582	5	4311	448	69	355	0	872	134	1706	35	0	1875	93	213	68	3	377	7435
Apprch %	2.9	83.5	13.5	0.1		51.4	7.9	40.7	0		7.1	91	1.9	0		24.7	56.5	18	0.8		
Total %	1.7	48.4	7.8	0.1	58	6	0.9	4.8	0	11.7	1.8	22.9	0.5	0	25.2	1.3	2.9	0.9	0	5.1	

	LAWRENCE EXPY Southbound					ELKO DR Westbound					LAWRENCE EXPY Northbound					PERSIAN DR Eastbound					
Start Time	Right	Thru	Left	Peds	App. Total	Right	Thru	Left	Peds	App. Total	Right	Thru	Left	Peds	App. Total	Right	Thru	Left	Peds	App. Total	Int. Total
Peak Hour Analysis From 04:30 PM to 06:15 PM - Peak 1 of 1																					
Peak Hour for Entire Intersection Begins at 05:00 PM																					
05:00 PM	12	480	70	**2**	564	**70**	9	45	0	**124**	**23**	**234**	**5**	0	**262**	**17**	28	**16**	0	**61**	1011
05:15 PM	**21**	**501**	**107**	1	**630**	56	**11**	33	0	100	8	210	5	0	223	11	33	8	0	52	1005
05:30 PM	20	487	93	1	601	56	8	47	0	111	17	229	5	0	251	12	36	5	0	53	**1016**
05:45 PM	14	451	61	0	526	61	8	**52**	0	121	12	151	2	0	165	12	**37**	8	**2**	59	871
Total Volume	67	1919	331	4	2321	243	36	177	0	456	60	824	17	0	901	52	134	37	2	225	3903
% App. Total	2.9	82.7	14.3	0.2		53.3	7.9	38.8	0		6.7	91.5	1.9	0		23.1	59.6	16.4	0.9		
PHF	.798	.958	.773	.500	.921	.868	.818	.851	.000	.919	.652	.880	.850	.000	.860	.765	.905	.578	.250	.922	.960

Traffic Data Service

Campbell, CA
(408) 377-2988
tdsbay@cs.com

File Name : 18PM FINAL
Site Code : 00000018
Start Date : 2/28/2013
Page No : 2

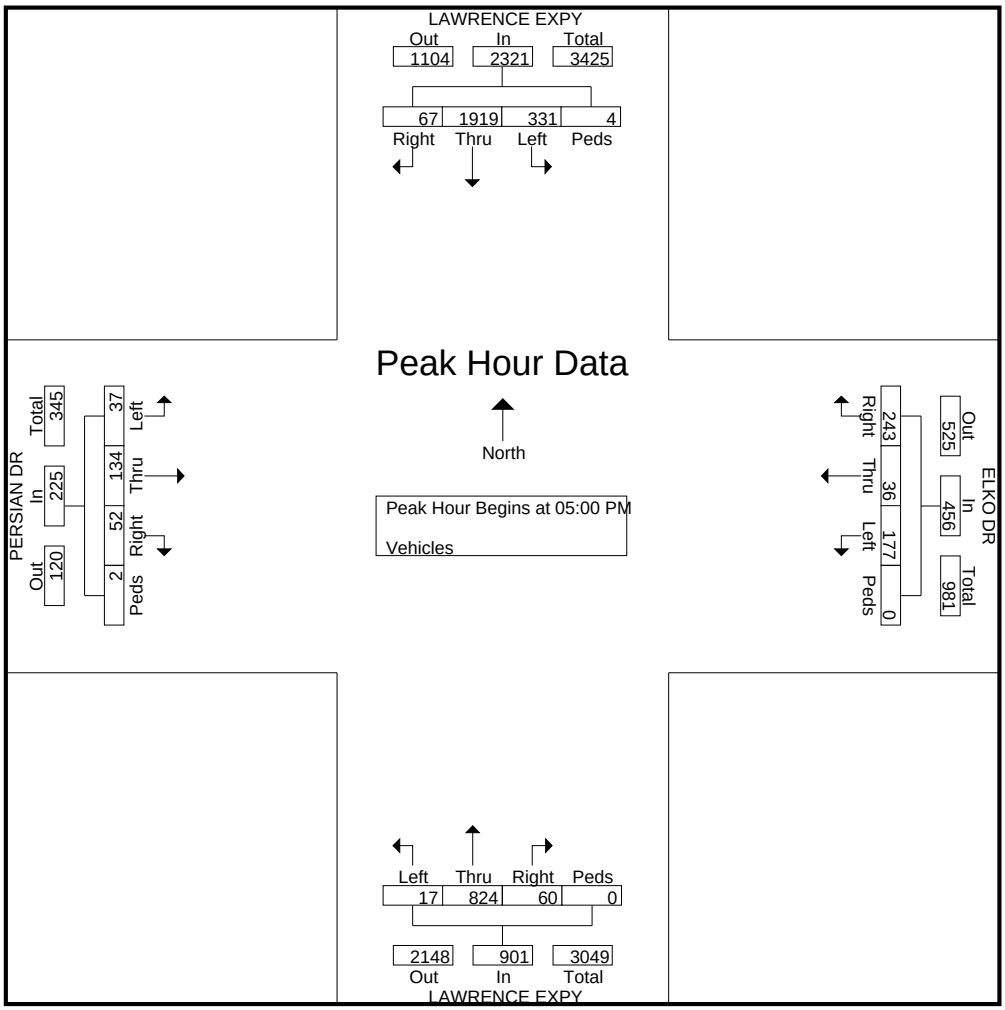

Traffic Data Service

Campbell, CA
(408) 377-2988
tdsbay@cs.com

File Name : 18PM FINAL
Site Code : 00000018
Start Date : 2/28/2013
Page No : 1

Groups Printed- Bikes

	LAWRENCE EXPY Southbound					ELKO DR Westbound					LAWRENCE EXPY Northbound					PERSIAN DR Eastbound					
Start Time	Right	Thru	Left	Peds	App. Total	Right	Thru	Left	Peds	App. Total	Right	Thru	Left	Peds	App. Total	Right	Thru	Left	Peds	App. Total	Int. Total
04:30 PM	0	1	0	0	1	0	0	0	0	0	0	0	0	0	0	0	0	0	0	0	1
04:45 PM	0	0	0	0	0	0	2	0	0	2	0	0	0	0	0	0	0	0	0	0	2
Total	0	1	0	0	1	0	2	0	0	2	0	0	0	0	0	0	0	0	0	0	3
05:00 PM	0	0	0	0	0	0	1	0	0	1	0	2	0	0	2	0	1	0	0	1	4
05:15 PM	0	0	0	0	0	0	1	0	0	1	0	0	0	0	0	0	0	0	0	0	1
05:30 PM	0	0	0	0	0	0	2	0	0	2	0	0	0	0	0	0	2	0	0	2	4
05:45 PM	0	0	0	0	0	0	2	1	0	3	0	1	0	0	1	0	0	1	0	1	5
Total	0	0	0	0	0	0	6	1	0	7	0	3	0	0	3	0	3	1	0	4	14
06:00 PM	0	0	0	0	0	0	0	0	0	0	0	0	0	0	0	0	2	0	0	2	2
06:15 PM	0	0	0	0	0	0	1	0	0	1	0	1	0	0	1	0	0	0	0	0	2
Grand Total	0	1	0	0	1	0	9	1	0	10	0	4	0	0	4	0	5	1	0	6	21
Apprch %	0	100	0	0		0	90	10	0		0	100	0	0		0	83.3	16.7	0		
Total %	0	4.8	0	0	4.8	0	42.9	4.8	0	47.6	0	19	0	0	19	0	23.8	4.8	0	28.6	

	LAWRENCE EXPY Southbound					ELKO DR Westbound					LAWRENCE EXPY Northbound					PERSIAN DR Eastbound					
Start Time	Right	Thru	Left	Peds	App. Total	Right	Thru	Left	Peds	App. Total	Right	Thru	Left	Peds	App. Total	Right	Thru	Left	Peds	App. Total	Int. Total
Peak Hour Analysis From 04:30 PM to 06:15 PM - Peak 1 of 1																					
Peak Hour for Entire Intersection Begins at 05:00 PM																					
05:00 PM	0	0	0	0	0	0	1	0	0	1	0	**2**	0	0	**2**	0	1	0	0	1	4
05:15 PM	0	0	0	0	0	0	1	0	0	1	0	0	0	0	0	0	0	0	0	0	1
05:30 PM	0	0	0	0	0	0	**2**	0	0	2	0	0	0	0	0	0	**2**	0	0	**2**	4
05:45 PM	0	0	0	0	0	0	2	**1**	0	**3**	0	1	0	0	1	0	0	**1**	0	1	**5**
Total Volume	0	0	0	0	0	0	6	1	0	7	0	3	0	0	3	0	3	1	0	4	14
% App. Total	0	0	0	0		0	85.7	14.3	0		0	100	0	0		0	75	25	0		
PHF	.000	.000	.000	.000	.000	.000	.750	.250	.000	.583	.000	.375	.000	.000	.375	.000	.375	.250	.000	.500	.700

Traffic Data Service

Campbell, CA
(408) 377-2988
tdsbay@cs.com

File Name : 18PM FINAL
Site Code : 00000018
Start Date : 2/28/2013
Page No : 2

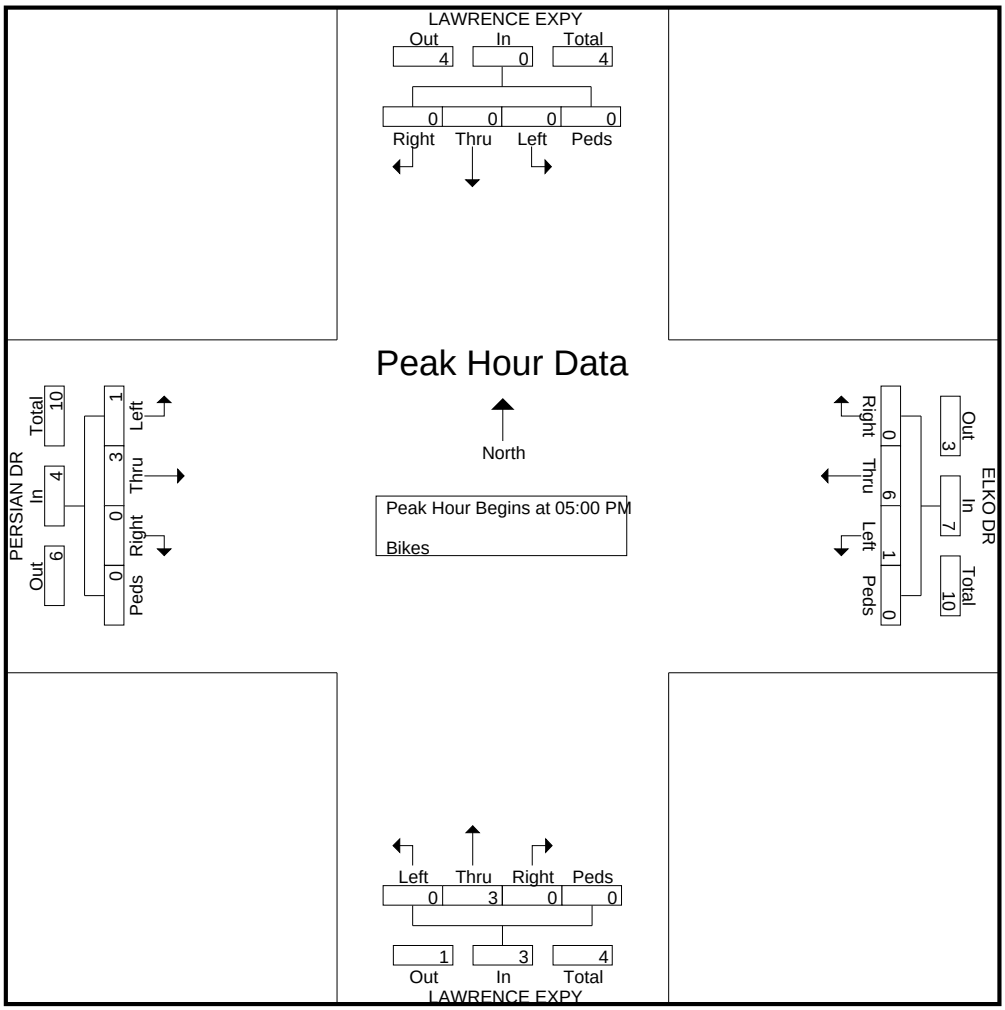

QUALITY COUNTS REPORT
==========

Intersectio S Mathilda W el Camino Real
City/State: Sunnyvale CA
QCJobNo: 10849801
ClientID:
Date: ########
Comments:

PEAK HOUI 8:00 AM
PEAK HOUI 9:00 AM
PEAK 15-M 8:40 AM
PEAK 15-M 8:55 AM
PHF 0.9

Lane Configuration:

	SIGNAL	SBLane1	SBLane2	SBLane3	SBLane4	SBLane5	SBLane6	SBLane7			
		R	T	T	T	L	L				SIGNAL
EBLane7										TR	WBLane1
EBLane6										T	WBLane2
EBLane5	L									T	WBLane3
EBLane4	L									L	WBLane4
EBLane3	T										WBLane5
EBLane2	T										WBLane6
EBLane1	TR										WBLane7
SIGNAL					L	T	T	TR			
		NBLane7	NBLane6	NBLane5	NBLane4	NBLane3	NBLane2	NBLane1	SIGNAL		

PEAK-HOUR VOLUMES

NBLeft	NBThru	NBRight	SBLeft	SBThru	SBRight	EBLeft	EBThru	EBRight	WBLeft	WBThru	WBRight	NBEntering	SBEntering	EBEntering	WBEnterin	NBLeaving	SBLeaving	EBLeaving	WBLeaving
342	1647	19	196	344	187	334	522	86	23	1067	308	2008	727	942	1398	2294	455	727	1599

PERCENT HEAVY VEHICLES

NBLeft	NBThru	NBRight	SBLeft	SBThru	SBRight	EBLeft	EBThru	EBRight	WBLeft	WBThru	WBRight	NBEntering	SBEntering	EBEntering	WBEnterin	NBLeaving	SBLeaving	EBLeaving	WBLeaving
1.5	0.5	0	3.1	3.5	1.6	0	5	7	4.3	2.4	0	0.7	2.9	3.4	1.9	0.4	4.2	4.4	2.1

PEAK-HOUR VOLUMES - PEDESTRIANS

North	South	East	West
7	14	8	5

PEAK-HOUR VOLUMES - BICYCLES

NBLeft	NBThru	NBRight	SBLeft	SBThru	SBRight	EBLeft	EBThru	EBRight	WBLeft	WBThru	WBRight
1	1	0	0	0	0	0	0	0	0	0	0

PEAK 15-MIN FLOWRATES

VehicleTyp	NBLeft	NBThru	NBRight	NBUTurn	NBRTOR	SBLeft	SBThru	SBRight	SBUTurn	SBRTOR	EBLeft	EBThru	EBRight	EBUTurn	EBRTOR	WBLeft	WBThru	WBRight	WBUTurn	WBRTOR	Total
All Vehicles	376	1884	16	8	0	260	332	208	24	0	336	584	84	20	0	20	1176	316	4	0	5648
Heavy Truc	4	16	0			8	4	12			0	32	4			4	44	0			128
Pedestrians		12					0					0					20				32
Bicycles	0	0	0			0	0	0			0	0	0			0	0	0			0

ALL-VEHICLE VOLUMES

Time Perio	NB Left	NB Thru	NB Right	NB U-Turn	NB RTOR	SB Left	SB Thru	SB Right	SB U-Turn	SB RTOR	EB Left	EB Thru	EB Right	EB U-Turn	EB RTOR	WB Left	WB Thru	WB Right	WB U-Turn	WB RTOR	Total	Hourly Tota
7:00 AM	18	42	1	1	0	13	10	1	1	0	2	15	4	0	0	0	24	3	0	0	135	
7:05 AM	14	51	0	1	0	10	25	4	0	0	6	14	1	0	0	1	34	11	0	0	172	
7:10 AM	14	49	2	0	0	4	7	5	0	0	8	17	1	0	0	1	51	8	0	0	167	
7:15 AM	22	40	0	1	0	11	27	6	0	0	4	17	1	1	0	0	48	10	0	0	188	
7:20 AM	13	54	0	0	0	16	17	8	0	0	10	21	2	0	0	0	45	13	0	0	199	
7:25 AM	15	53	0	0	0	6	21	9	0	0	7	25	6	1	0	1	69	14	0	0	227	
7:30 AM	25	62	1	0	0	11	19	11	0	0	15	24	5	0	0	0	68	12	0	0	253	
7:35 AM	17	46	1	0	0	14	25	14	0	0	8	25	9	0	0	0	71	16	1	0	247	
7:40 AM	12	64	0	0	0	12	16	9	0	0	20	38	4	0	0	0	62	11	0	0	248	
7:45 AM	30	124	2	0	0	11	32	24	2	0	13	45	8	0	0	0	73	16	0	0	380	
7:50 AM	24	112	1	0	0	12	40	12	3	0	23	24	3	0	0	2	62	24	1	0	343	
7:55 AM	24	129	0	1	0	12	21	8	3	0	23	24	3	0	0	3	83	16	0	0	350	2909
8:00 AM	24	84	0	0	0	9	30	15	3	0	22	51	8	2	0	0	87	25	0	0	360	3134
8:05 AM	15	96	0	0	0	10	22	12	1	0	23	25	9	2	0	0	84	21	1	0	321	3283
8:10 AM	32	164	0	3	0	13	39	27	0	0	25	46	3	0	0	1	76	31	0	0	460	3576
8:15 AM	27	123	2	0	0	6	25	14	0	0	36	32	5	0	0	1	80	17	0	0	368	3756
8:20 AM	32	147	4	1	0	11	29	12	0	0	36	52	9	1	0	1	80	17	0	0	432	3989
8:25 AM	28	132	2	2	0	10	31	12	2	0	33	52	8	0	0	1	127	38	1	0	479	4241
8:30 AM	32	153	1	0	0	15	29	13	0	0	24	35	7	0	0	1	64	23	2	0	399	4387
8:35 AM	24	135	2	0	0	20	31	15	2	0	16	41	6	0	0	5	76	31	1	0	405	4545
8:40 AM	38	174	2	2	0	23	24	16	2	0	25	47	4	0	0	3	100	22	0	0	482	4779
8:45 AM	30	164	1	0	0	21	31	26	1	0	33	52	11	1	0	1	96	30	1	0	499	4898
8:50 AM	26	133	1	0	0	21	28	10	3	0	26	47	6	4	0	1	98	27	0	0	431	4986
8:55 AM	26	142	4	0	0	21	25	15	2	0	24	42	10	1	0	2	99	26	0	0	439	5075

HEAVY-VEHICLE VOLUMES

Time Perio	NB Left	NB Thru	NB Right	SB Left	SB Thru	SB Right	EB Left	EB Thru	EB Right	WB Left	WB Thru	WB Right	Total
7:00 AM	0	2	0	1	0	0	0	0	0	0	0	0	3
7:05 AM	0	0	0	0	5	3	0	3	0	0	0	0	11
7:10 AM	0	0	1	0	0	0	0	2	0	0	2	0	5
7:15 AM	0	1	0	0	2	1	0	1	0	0	3	0	8
7:20 AM	0	0	0	0	0	1	0	2	0	0	1	0	4
7:25 AM	0	0	0	0	1	0	1	1	0	0	4	0	7
7:30 AM	1	0	0	1	0	1	2	1	0	0	3	0	9
7:35 AM	0	0	0	1	1	0	1	2	1	0	0	0	6
7:40 AM	1	0	0	0	0	0	0	1	0	0	3	2	7
7:45 AM	1	0	0	2	0	1	0	0	1	0	0	0	5
7:50 AM	1	0	0	1	1	0	0	3	0	0	3	1	10
7:55 AM	0	0	0	0	1	0	0	3	0	0	2	0	6
8:00 AM	0	0	0	0	1	0	0	4	1	0	2	0	8
8:05 AM	0	0	0	0	1	0	0	0	0	0	2	0	3
8:10 AM	0	0	0	1	2	0	0	4	1	0	1	0	9
8:15 AM	1	1	0	0	1	0	0	1	0	0	2	0	6
8:20 AM	0	1	0	0	2	0	0	1	1	0	3	0	8
8:25 AM	0	0	0	1	1	0	0	5	0	0	2	0	9
8:30 AM	1	0	0	1	2	0	0	0	0	0	1	0	5
8:35 AM	1	1	0	1	0	0	0	2	1	0	2	0	8
8:40 AM	0	1	0	0	0	2	0	3	0	1	4	0	11
8:45 AM	1	1	0	0	0	1	0	3	1	0	4	0	11
8:50 AM	0	2	0	2	1	0	0	2	0	0	3	0	10
8:55 AM	1	2	0	0	1	0	0	1	1	0	0	0	6

PEDESTRIAN VOLUMES

Time Perio	North	South	East	West	Total
7:00 AM	0	0	0	0	0
7:05 AM	0	0	0	0	0
7:10 AM	0	1	0	1	2
7:15 AM	2	0	0	2	4
7:20 AM	0	0	1	0	1
7:25 AM	0	0	0	0	0
7:30 AM	0	0	0	0	0
7:35 AM	0	1	1	1	3
7:40 AM	0	3	0	2	5
7:45 AM	1	1	0	1	3
7:50 AM	0	0	0	0	0
7:55 AM	1	0	0	1	2
8:00 AM	0	2	0	0	2
8:05 AM	0	0	0	0	0
8:10 AM	0	0	0	1	1

8:15 AM	0	2	0	0	2
8:20 AM	1	0	1	0	2
8:25 AM	3	4	0	2	9
8:30 AM	2	1	1	1	5
8:35 AM	1	0	1	0	2
8:40 AM	0	0	2	0	2
8:45 AM	0	2	1	0	3
8:50 AM	0	1	2	0	3
8:55 AM	0	2	0	1	3

BICYCLE VOLUMES

Time Perio	NB Left	NB Thru	NB Right	SB Left	SB Thru	SB Right	EB Left	EB Thru	EB Right	WB Left	WB Thru	WB Right	Total
7:00 AM	0	0	0	0	0	0	0	0	0	0	0	0	0
7:05 AM	0	0	0	0	0	0	0	0	0	0	0	0	0
7:10 AM	0	0	0	0	0	0	0	0	0	0	0	0	0
7:15 AM	0	0	0	0	0	0	0	0	0	0	0	0	0
7:20 AM	0	0	0	0	0	0	0	0	0	0	0	0	0
7:25 AM	0	0	0	0	0	0	0	0	0	0	0	0	0
7:30 AM	0	0	0	0	0	0	0	0	0	0	0	0	0
7:35 AM	0	1	0	0	0	0	0	0	0	0	0	0	1
7:40 AM	0	0	0	0	0	0	0	2	0	0	0	0	2
7:45 AM	0	0	0	0	0	0	0	1	0	0	0	0	1
7:50 AM	0	0	0	0	0	0	0	1	0	0	1	0	2
7:55 AM	0	0	0	0	0	0	0	0	0	0	0	0	0
8:00 AM	0	0	0	0	0	0	0	0	0	0	0	0	0
8:05 AM	0	0	0	0	0	0	0	0	0	0	0	0	0
8:10 AM	0	0	0	0	0	0	0	0	0	0	0	0	0
8:15 AM	1	0	0	0	0	0	0	0	0	0	0	0	1
8:20 AM	0	0	0	0	0	0	0	0	0	0	0	0	0
8:25 AM	0	0	0	0	0	0	0	0	0	0	0	0	0
8:30 AM	0	0	0	0	0	0	0	0	0	0	0	0	0
8:35 AM	0	1	0	0	0	0	0	0	0	0	0	0	1
8:40 AM	0	0	0	0	0	0	0	0	0	0	0	0	0
8:45 AM	0	0	0	0	0	0	0	0	0	0	0	0	0
8:50 AM	0	0	0	0	0	0	0	0	0	0	0	0	0
8:55 AM	0	0	0	0	0	0	0	0	0	0	0	0	0

als

QUALITY COUNTS REPORT
==========

Intersectio S Mathilda W el Camino Real
City/State: Sunnyvale CA
QCJobNo: 10849802
ClientID:
Date: ########
Comments:

PEAK HOUI 5:00 PM
PEAK HOUI 6:00 PM
PEAK 15-M 5:45 PM
PEAK 15-M 6:00 PM
PHF 0.96

Lane Configuration:

	SIGNAL	SBLane1	SBLane2	SBLane3	SBLane4	SBLane5	SBLane6	SBLane7		
		R	T	T	T	L	L			SIGNAL
EBLane7									TR	WBLane1
EBLane6									T	WBLane2
EBLane5	L								T	WBLane3
EBLane4	L								L	WBLane4
EBLane3	T									WBLane5
EBLane2	T									WBLane6
EBLane1	TR									WBLane7
SIGNAL					L	T	T	TR		
		NBLane7	NBLane6	NBLane5	NBLane4	NBLane3	NBLane2	NBLane1	SIGNAL	

PEAK-HOUR VOLUMES

NBLeft	NBThru	NBRight	SBLeft	SBThru	SBRight	EBLeft	EBThru	EBRight	WBLeft	WBThru	WBRight	NBEntering	SBEntering	EBEntering	WBEnterin	NBLeaving	SBLeaving	EBLeaving	WBLeaving
174	368	44	516	1529	387	218	1304	195	78	755	208	586	2432	1717	1041	789	1788	1882	1317

PERCENT HEAVY VEHICLES

NBLeft	NBThru	NBRight	SBLeft	SBThru	SBRight	EBLeft	EBThru	EBRight	WBLeft	WBThru	WBRight	NBEntering	SBEntering	EBEntering	WBEnterin	NBLeaving	SBLeaving	EBLeaving	WBLeaving
1.1	1.4	0	1.2	0.5	1	0.5	1.6	0.5	0	2.1	2.4	1.2	0.7	1.3	2	1.4	0.4	1.4	1.7

PEAK-HOUR VOLUMES - PEDESTRIANS

North	South	East	West
5	6	1	9

PEAK-HOUR VOLUMES - BICYCLES

NBLeft	NBThru	NBRight	SBLeft	SBThru	SBRight	EBLeft	EBThru	EBRight	WBLeft	WBThru	WBRight
0	0	0	0	2	0	0	3	0	0	0	0

PEAK 15-MIN FLOWRATES

VehicleTyp	NBLeft	NBThru	NBRight	NBUTurn	NBRTOR	SBLeft	SBThru	SBRight	SBUTurn	SBRTOR	EBLeft	EBThru	EBRight	EBUTurn	EBRTOR	WBLeft	WBThru	WBRight	WBUTurn	WBRTOR	Total
All Vehicles	156	316	36	8	0	536	1668	400	0	0	240	1312	200	32	0	48	820	232	24	0	6028
Heavy Truc	4	0	0			12	8	0			4	28	4			0	8	4			72
Pedestrians		4					0					0					4				8
Bicycles	0	0	0			0	1	0			0	0	0			0	0	0			1

ALL-VEHICLE VOLUMES

Time Perio	NB Left	NB Thru	NB Right	NB U-Turn	NB RTOR	SB Left	SB Thru	SB Right	SB U-Turn	SB RTOR	EB Left	EB Thru	EB Right	EB U-Turn	EB RTOR	WB Left	WB Thru	WB Right	WB U-Turn	WB RTOR	Total	Hourly Tota
4:00 PM	17	26	3	0	0	25	42	20	2	0	23	99	14	0	0	2	72	15	1	0	361	
4:05 PM	17	17	1	1	0	32	50	14	1	0	17	80	15	2	0	5	60	16	2	0	330	
4:10 PM	15	34	4	2	0	46	79	13	0	0	14	91	13	0	0	3	55	15	0	0	384	
4:15 PM	9	22	4	1	0	25	57	21	2	0	26	96	16	0	0	5	54	10	0	0	348	
4:20 PM	14	15	6	0	0	35	67	20	4	0	26	95	8	0	0	10	60	19	0	0	379	
4:25 PM	18	32	7	2	0	26	56	23	1	0	20	143	27	1	0	0	75	14	1	0	446	
4:30 PM	11	25	3	1	0	32	68	25	2	0	15	106	12	1	0	5	66	24	2	0	398	
4:35 PM	19	16	5	3	0	42	82	26	0	0	9	90	12	1	0	3	61	17	5	0	391	
4:40 PM	20	33	5	2	0	31	95	19	2	0	11	120	24	1	0	1	65	19	1	0	449	
4:45 PM	11	22	3	1	0	24	97	22	1	0	14	96	10	4	0	12	50	16	2	0	385	
4:50 PM	15	37	3	3	0	35	97	20	3	0	12	87	15	1	0	3	40	16	1	0	388	
4:55 PM	24	18	2	2	0	56	56	29	0	0	24	114	13	3	0	9	115	17	1	0	483	4742
5:00 PM	14	20	2	2	0	44	99	32	3	0	14	114	16	0	0	4	65	14	4	0	447	4828
5:05 PM	16	32	0	3	0	40	127	29	1	0	15	106	13	2	0	6	58	21	2	0	471	4969
5:10 PM	14	24	6	0	0	22	98	28	2	0	15	133	19	0	0	3	80	19	6	0	469	5054
5:15 PM	15	37	2	3	0	45	131	31	0	0	22	90	14	0	0	4	64	16	2	0	476	5182
5:20 PM	13	47	6	0	0	41	139	30	1	0	15	111	15	3	0	3	51	15	2	0	492	5295
5:25 PM	12	23	0	0	0	47	140	33	0	0	24	80	14	1	0	5	39	18	1	0	437	5286
5:30 PM	10	37	8	1	0	42	138	33	1	0	5	101	18	1	0	5	53	17	0	0	470	5358
5:35 PM	13	34	5	2	0	48	128	36	1	0	14	123	22	0	0	5	60	13	3	0	507	5474
5:40 PM	13	35	6	2	0	42	112	35	2	0	18	118	14	1	0	2	80	17	3	0	500	5525
5:45 PM	16	34	2	0	0	45	119	30	0	0	22	97	18	4	0	5	59	18	3	0	472	5612
5:50 PM	13	23	6	0	0	29	135	36	0	0	12	120	12	3	0	4	82	18	3	0	496	5720
5:55 PM	10	22	1	2	0	60	163	34	0	0	26	111	20	1	0	3	64	22	0	0	539	5776

HEAVY-VEHICLE VOLUMES

Time Perio	NB Left	NB Thru	NB Right	SB Left	SB Thru	SB Right	EB Left	EB Thru	EB Right	WB Left	WB Thru	WB Right	Total
4:00 PM	1	0	0	1	0	0	0	1	0	0	1	0	4
4:05 PM	1	1	0	0	3	0	1	3	0	0	4	0	13
4:10 PM	0	0	0	0	0	0	0	4	1	0	2	1	8
4:15 PM	0	0	0	0	0	0	1	4	0	1	0	1	7
4:20 PM	0	1	0	1	1	0	2	1	0	0	2	1	9
4:25 PM	0	2	0	0	0	0	0	2	0	0	2	0	6
4:30 PM	1	2	0	0	0	0	0	4	0	0	1	0	8
4:35 PM	0	1	0	0	3	0	0	3	1	1	1	0	10
4:40 PM	0	1	0	0	1	1	0	2	0	0	2	0	7
4:45 PM	0	0	0	0	0	0	1	2	0	0	1	0	4
4:50 PM	1	0	0	0	1	0	0	0	0	0	0	0	2
4:55 PM	0	1	0	0	0	0	0	4	0	0	0	0	5
5:00 PM	0	1	0	0	2	1	0	3	0	0	4	1	12
5:05 PM	0	2	0	0	0	1	0	2	0	0	0	0	5
5:10 PM	0	0	0	0	1	0	0	0	0	0	1	1	3
5:15 PM	1	0	0	0	0	1	0	2	0	0	1	1	6
5:20 PM	0	0	0	1	1	1	0	3	0	0	2	0	8
5:25 PM	0	0	0	2	0	0	0	1	0	0	1	0	4
5:30 PM	0	0	0	0	1	0	0	2	0	0	2	0	5
5:35 PM	0	0	0	0	0	0	0	1	0	0	0	0	1
5:40 PM	0	2	0	0	0	0	0	0	0	0	3	1	6
5:45 PM	1	0	0	1	1	0	0	2	0	0	0	0	5
5:50 PM	0	0	0	2	1	0	0	4	0	0	1	0	8
5:55 PM	0	0	0	0	0	0	1	1	1	0	1	1	5

PEDESTRIAN VOLUMES

Time Perio	North	South	East	West	Total
4:00 PM	1	0	0	0	1
4:05 PM	0	0	2	1	3
4:10 PM	0	0	1	0	1
4:15 PM	0	0	3	0	3
4:20 PM	1	0	1	0	2
4:25 PM	3	0	0	0	3
4:30 PM	2	0	1	0	3
4:35 PM	0	0	1	0	1
4:40 PM	1	0	0	1	2
4:45 PM	0	2	1	2	5
4:50 PM	0	1	0	0	1
4:55 PM	0	0	0	0	0
5:00 PM	0	0	0	1	1
5:05 PM	1	0	0	1	2
5:10 PM	2	1	0	0	3

5:15 PM	0	0	0	2	2
5:20 PM	1	1	0	0	2
5:25 PM	0	0	0	0	0
5:30 PM	0	0	0	3	3
5:35 PM	1	2	0	0	3
5:40 PM	0	1	0	2	3
5:45 PM	0	1	0	0	1
5:50 PM	0	0	0	0	0
5:55 PM	0	0	1	0	1

BICYCLE VOLUMES

Time Perio	NB Left	NB Thru	NB Right	SB Left	SB Thru	SB Right	EB Left	EB Thru	EB Right	WB Left	WB Thru	WB Right	Total
4:00 PM	0	0	0	0	0	0	0	0	0	0	0	0	0
4:05 PM	0	0	0	0	0	0	0	0	0	0	0	0	0
4:10 PM	0	0	0	0	0	0	0	1	0	0	0	0	1
4:15 PM	0	0	0	0	0	0	0	0	0	0	0	0	0
4:20 PM	0	0	0	0	0	0	0	0	0	0	0	0	0
4:25 PM	0	0	0	0	0	0	0	1	0	0	0	0	1
4:30 PM	0	0	0	0	1	0	0	0	0	0	0	0	1
4:35 PM	0	0	0	0	0	0	0	0	0	0	0	0	0
4:40 PM	0	0	0	0	0	0	0	0	0	0	0	0	0
4:45 PM	0	0	0	0	0	0	0	0	0	0	0	0	0
4:50 PM	0	0	0	0	0	0	0	0	0	0	0	0	0
4:55 PM	0	0	0	0	0	0	0	0	0	0	0	0	0
5:00 PM	0	0	0	0	0	0	0	0	0	0	0	0	0
5:05 PM	0	0	0	0	1	0	0	0	0	0	0	0	1
5:10 PM	0	0	0	0	0	0	0	0	0	0	0	0	0
5:15 PM	0	0	0	0	0	0	0	0	0	0	0	0	0
5:20 PM	0	0	0	0	0	0	0	0	0	0	0	0	0
5:25 PM	0	0	0	0	0	0	0	0	0	0	0	0	0
5:30 PM	0	0	0	0	0	0	0	0	0	0	0	0	0
5:35 PM	0	0	0	0	0	0	0	1	0	0	0	0	1
5:40 PM	0	0	0	0	0	0	0	2	0	0	0	0	2
5:45 PM	0	0	0	0	0	0	0	0	0	0	0	0	0
5:50 PM	0	0	0	0	1	0	0	0	0	0	0	0	1
5:55 PM	0	0	0	0	0	0	0	0	0	0	0	0	0

als

QUALITY COUNTS REPORT
==========

Intersectio S Mathilda W Olive Ave
City/State: Sunnyvale CA
QCJobNo: 10849803
ClientID:
Date: ########
Comments:

PEAK HOUI 8:00 AM
PEAK HOUI 9:00 AM
PEAK 15-M 8:35 AM
PEAK 15-M 8:50 AM
PHF 0.88

Lane Configuration:

	SIGNAL	SBLane1	SBLane2	SBLane3	SBLane4	SBLane5	SBLane6	SBLane7			
		R	T	T	T	L					SIGNAL
EBLane7									LTR		WBLane1
EBLane6											WBLane2
EBLane5											WBLane3
EBLane4											WBLane4
EBLane3											WBLane5
EBLane2	LT										WBLane6
EBLane1	R										WBLane7
SIGNAL					L	T	T	TR			
		NBLane7	NBLane6	NBLane5	NBLane4	NBLane3	NBLane2	NBLane1	SIGNAL		

PEAK-HOUR VOLUMES

NBLeft	NBThru	NBRight	SBLeft	SBThru	SBRight	EBLeft	EBThru	EBRight	WBLeft	WBThru	WBRight	NBEntering	SBEntering	EBEntering	WBEnterin	NBLeaving	SBLeaving	EBLeaving	WBLeaving
59	2239	16	26	672	71	36	27	22	18	44	45	2314	769	85	107	2330	717	59	169

PERCENT HEAVY VEHICLES

NBLeft	NBThru	NBRight	SBLeft	SBThru	SBRight	EBLeft	EBThru	EBRight	WBLeft	WBThru	WBRight	NBEntering	SBEntering	EBEntering	WBEnterin	NBLeaving	SBLeaving	EBLeaving	WBLeaving
0	0.4	6.3	3.8	3.1	5.6	5.6	7.4	0	5.6	4.5	2.2	0.5	3.4	4.7	3.7	0.6	3.1	6.8	3.6

PEAK-HOUR VOLUMES - PEDESTRIANS

North	South	East	West
3	6	5	2

PEAK-HOUR VOLUMES - BICYCLES

NBLeft	NBThru	NBRight	SBLeft	SBThru	SBRight	EBLeft	EBThru	EBRight	WBLeft	WBThru	WBRight
0	1	0	0	1	0	0	1	0	0	1	0

PEAK 15-MIN FLOWRATES

VehicleTyp	NBLeft	NBThru	NBRight	NBUTurn	NBRTOR	SBLeft	SBThru	SBRight	SBUTurn	SBRTOR	EBLeft	EBThru	EBRight	EBUTurn	EBRTOR	WBLeft	WBThru	WBRight	WBUTurn	WBRTOR	Total
All Vehicles	44	2592	12	4	0	12	812	68	8	0	28	4	36	0	0	20	52	24	0	0	3716
Heavy Truc	0	20	0			0	12	4			4	0	0			4	0	0			44
Pedestrians		4					4					0					4				12
Bicycles	0	0	0			0	0	0			0	0	0			0	0	0			0

ALL-VEHICLE VOLUMES

Time Perio	NB Left	NB Thru	NB Right	NB U-Turn	NB RTOR	SB Left	SB Thru	SB Right	SB U-Turn	SB RTOR	EB Left	EB Thru	EB Right	EB U-Turn	EB RTOR	WB Left	WB Thru	WB Right	WB U-Turn	WB RTOR	Total	Hourly Tota
7:00 AM	0	55	1	0	0	5	31	5	0	0	0	1	2	0	0	1	2	0	0	0	103	
7:05 AM	2	63	0	0	0	1	24	0	2	0	1	1	2	0	0	0	2	1	0	0	99	
7:10 AM	3	59	0	1	0	3	32	4	0	0	4	2	0	0	0	2	3	6	0	0	119	
7:15 AM	1	58	0	0	0	0	25	3	0	0	4	0	0	0	0	1	5	3	0	0	100	
7:20 AM	5	71	0	0	0	1	41	5	2	0	1	0	0	0	0	2	3	6	0	0	137	
7:25 AM	5	65	0	0	0	1	41	4	0	0	2	0	1	0	0	0	1	2	0	0	122	
7:30 AM	4	80	0	0	0	0	37	3	0	0	3	1	0	0	0	2	4	2	0	0	136	
7:35 AM	3	72	2	0	0	0	48	4	2	0	7	2	2	0	0	3	0	7	0	0	152	
7:40 AM	3	114	1	0	0	1	55	6	0	0	3	0	3	0	0	3	4	5	0	0	198	
7:45 AM	2	131	0	0	0	1	52	4	0	0	2	1	1	0	0	5	4	4	0	0	207	
7:50 AM	1	155	0	0	0	1	64	3	0	0	0	3	2	0	0	4	5	5	0	0	243	
7:55 AM	7	158	0	0	0	1	53	6	1	0	1	4	1	0	0	3	4	1	0	0	240	1856
8:00 AM	4	126	2	0	0	1	40	7	1	0	4	1	3	0	0	2	7	4	0	0	202	1955
8:05 AM	8	137	2	1	0	2	45	7	0	0	1	2	1	0	0	3	2	3	0	0	214	2070
8:10 AM	1	199	1	0	0	1	71	3	0	0	2	3	0	0	0	0	2	4	0	0	287	2238
8:15 AM	8	174	1	0	0	3	36	5	0	0	0	3	4	0	0	0	3	7	0	0	244	2382
8:20 AM	1	202	0	0	0	0	64	8	0	0	6	2	0	0	0	0	7	6	0	0	296	2541
8:25 AM	3	202	2	2	0	0	58	6	1	0	4	3	1	0	0	2	0	2	0	0	286	2705
8:30 AM	6	190	1	0	0	5	39	3	0	0	6	5	2	0	0	5	4	3	0	0	269	2838
8:35 AM	4	188	0	0	0	2	65	5	0	0	3	0	2	0	0	2	5	1	0	0	277	2963
8:40 AM	1	242	3	1	0	0	69	7	1	0	1	0	4	0	0	1	1	2	0	0	333	3098
8:45 AM	6	218	0	0	0	1	69	5	1	0	3	1	3	0	0	2	7	3	0	0	319	3210
8:50 AM	4	190	2	0	0	0	49	4	3	0	2	4	1	0	0	1	2	6	0	0	268	3235
8:55 AM	8	171	2	1	0	1	67	11	3	0	4	3	1	0	0	0	4	4	0	0	280	3275

HEAVY-VEHICLE VOLUMES

Time Perio	NB Left	NB Thru	NB Right	SB Left	SB Thru	SB Right	EB Left	EB Thru	EB Right	WB Left	WB Thru	WB Right	Total
7:00 AM	0	2	0	0	8	1	0	0	0	0	0	0	11
7:05 AM	0	0	0	0	0	0	0	0	1	0	0	0	1
7:10 AM	0	0	0	0	1	0	1	1	0	0	0	1	4
7:15 AM	0	1	0	0	2	1	0	0	0	0	1	0	5
7:20 AM	0	0	0	0	1	1	0	0	0	0	0	0	2
7:25 AM	0	1	0	0	0	0	0	0	0	0	0	0	1
7:30 AM	1	1	0	0	3	0	0	1	0	0	0	0	6
7:35 AM	0	2	0	0	1	0	0	1	0	0	0	0	4
7:40 AM	0	1	0	0	2	0	1	0	0	0	0	0	4
7:45 AM	0	0	0	0	3	0	0	0	0	0	0	0	3
7:50 AM	0	1	0	0	1	1	0	0	0	0	0	0	3
7:55 AM	0	0	0	0	0	0	0	0	0	1	0	0	1
8:00 AM	0	0	0	0	1	0	0	0	0	0	0	0	1
8:05 AM	0	0	1	0	2	0	0	0	0	0	0	0	3
8:10 AM	0	0	0	0	2	0	1	0	0	0	0	0	3
8:15 AM	0	1	0	0	1	0	0	0	0	0	0	0	2
8:20 AM	0	1	0	0	2	1	0	0	0	0	0	1	5
8:25 AM	0	0	0	0	5	0	0	1	0	0	0	0	6
8:30 AM	0	0	0	1	1	0	0	1	0	0	1	0	4
8:35 AM	0	1	0	0	2	0	0	0	0	0	0	0	3
8:40 AM	0	2	0	0	0	0	1	0	0	1	0	0	4
8:45 AM	0	2	0	0	1	1	0	0	0	0	0	0	4
8:50 AM	0	1	0	0	3	0	0	0	0	0	0	0	4
8:55 AM	0	2	0	0	1	2	0	0	0	0	1	0	6

PEDESTRIAN VOLUMES

Time Perio	North	South	East	West	Total
7:00 AM	0	1	0	0	1
7:05 AM	0	0	0	0	0
7:10 AM	0	1	0	0	1
7:15 AM	0	0	1	0	1
7:20 AM	0	0	1	0	1
7:25 AM	0	0	0	0	0
7:30 AM	0	0	0	0	0
7:35 AM	0	1	0	0	1
7:40 AM	1	0	0	0	1
7:45 AM	0	0	0	1	1
7:50 AM	0	0	0	0	0
7:55 AM	0	0	0	0	0
8:00 AM	0	2	0	0	2
8:05 AM	0	0	0	0	0
8:10 AM	1	0	0	1	2

8:15 AM	0	0	0	0	0
8:20 AM	0	0	0	0	0
8:25 AM	0	0	4	1	5
8:30 AM	0	1	0	0	1
8:35 AM	1	1	1	0	3
8:40 AM	0	0	0	0	0
8:45 AM	0	0	0	0	0
8:50 AM	1	0	0	0	1
8:55 AM	0	2	0	0	2

BICYCLE VOLUMES

Time Perio	NB Left	NB Thru	NB Right	SB Left	SB Thru	SB Right	EB Left	EB Thru	EB Right	WB Left	WB Thru	WB Right	Total
7:00 AM	0	0	0	0	0	0	0	0	0	0	0	0	0
7:05 AM	0	0	0	0	0	0	0	0	0	0	0	0	0
7:10 AM	0	0	0	0	0	0	0	1	0	0	0	0	1
7:15 AM	0	0	0	0	0	0	0	0	0	0	0	0	0
7:20 AM	0	0	0	0	0	0	0	0	0	0	0	0	0
7:25 AM	0	0	0	0	0	0	0	0	0	0	0	0	0
7:30 AM	0	0	0	0	0	0	0	0	0	0	0	0	0
7:35 AM	0	1	0	0	0	0	0	0	0	0	0	0	1
7:40 AM	0	0	0	0	0	0	0	0	0	0	0	0	0
7:45 AM	0	0	0	0	0	0	0	0	0	0	0	0	0
7:50 AM	0	0	0	0	0	0	0	0	0	0	2	0	2
7:55 AM	0	0	0	0	0	0	0	0	0	0	0	0	0
8:00 AM	0	0	0	0	0	0	0	0	0	0	0	0	0
8:05 AM	0	0	0	0	0	0	0	0	0	0	0	0	0
8:10 AM	0	0	0	0	0	0	0	0	0	0	0	0	0
8:15 AM	0	0	0	0	0	0	0	1	0	0	0	0	1
8:20 AM	0	0	0	0	0	0	0	0	0	0	0	0	0
8:25 AM	0	0	0	0	0	0	0	0	0	0	0	0	0
8:30 AM	0	1	0	0	0	0	0	0	0	0	0	0	1
8:35 AM	0	0	0	0	0	0	0	0	0	0	0	0	0
8:40 AM	0	0	0	0	0	0	0	0	0	0	0	0	0
8:45 AM	0	0	0	0	0	0	0	0	0	0	0	0	0
8:50 AM	0	0	0	0	1	0	0	0	0	0	1	0	2
8:55 AM	0	0	0	0	0	0	0	0	0	0	0	0	0

als

QUALITY COUNTS REPORT
==========

Intersectio S Mathilda W Olive Ave
City/State: Sunnyvale CA
QCJobNo: 10849804
ClientID:
Date: ########
Comments:

PEAK HOUI 5:00 PM
PEAK HOUI 6:00 PM
PEAK 15-M 5:35 PM
PEAK 15-M 5:50 PM
PHF 0.91

Lane Configuration:

	SIGNAL	SBLane1	SBLane2	SBLane3	SBLane4	SBLane5	SBLane6	SBLane7	
		R	T	T	T	L			SIGNAL
EBLane7								LTR	WBLane1
EBLane6									WBLane2
EBLane5									WBLane3
EBLane4									WBLane4
EBLane3									WBLane5
EBLane2	LT								WBLane6
EBLane1	R								WBLane7
SIGNAL					L	T	T	TR	
		NBLane7	NBLane6	NBLane5	NBLane4	NBLane3	NBLane2	NBLane1	SIGNAL

PEAK-HOUR VOLUMES

NBLeft	NBThru	NBRight	SBLeft	SBThru	SBRight	EBLeft	EBThru	EBRight	WBLeft	WBThru	WBRight	NBEntering	SBEntering	EBEntering	WBEnterin	NBLeaving	SBLeaving	EBLeaving	WBLeaving
38	726	22	86	2313	72	67	58	77	41	50	55	786	2471	202	146	887	2446	127	145

PERCENT HEAVY VEHICLES

NBLeft	NBThru	NBRight	SBLeft	SBThru	SBRight	EBLeft	EBThru	EBRight	WBLeft	WBThru	WBRight	NBEntering	SBEntering	EBEntering	WBEnterin	NBLeaving	SBLeaving	EBLeaving	WBLeaving
0	1.7	0	0	0.6	2.8	3	0	0	0	0	0	1.5	0.7	1	0	1.6	0.6	0	1.4

PEAK-HOUR VOLUMES - PEDESTRIANS

North	South	East	West
6	10	3	2

PEAK-HOUR VOLUMES - BICYCLES

NBLeft	NBThru	NBRight	SBLeft	SBThru	SBRight	EBLeft	EBThru	EBRight	WBLeft	WBThru	WBRight
0	0	0	0	1	0	0	1	0	0	1	1

PEAK 15-MIN FLOWRATES

VehicleTyp	NBLeft	NBThru	NBRight	NBUTurn	NBRTOR	SBLeft	SBThru	SBRight	SBUTurn	SBRTOR	EBLeft	EBThru	EBRight	EBUTurn	EBRTOR	WBLeft	WBThru	WBRight	WBUTurn	WBRTOR	Total
All Vehicles	16	808	36	12	0	64	2624	76	20	0	64	64	48	0	0	36	40	44	0	0	3952
Heavy Truc	0	16	0			0	16	0			4	0	0			0	0	0			36
Pedestrians		4					4					0					0				8
Bicycles	0	0	0			0	0	0			0	0	0			0	0	0			0

ALL-VEHICLE VOLUMES

Time Perio	NB Left	NB Thru	NB Right	NB U-Turn	NB RTOR	SB Left	SB Thru	SB Right	SB U-Turn	SB RTOR	EB Left	EB Thru	EB Right	EB U-Turn	EB RTOR	WB Left	WB Thru	WB Right	WB U-Turn	WB RTOR	Total	Hourly Tota
4:00 PM	2	52	1	2	0	4	92	4	1	0	6	6	4	0	0	4	4	7	0	0	189	
4:05 PM	5	53	1	2	0	3	107	3	2	0	2	2	6	0	0	3	4	3	0	0	196	
4:10 PM	4	56	5	1	0	5	91	1	2	0	7	7	9	0	0	3	8	3	0	0	202	
4:15 PM	2	68	1	4	0	3	129	10	0	0	4	3	7	0	0	1	4	5	0	0	241	
4:20 PM	5	41	2	0	0	5	88	6	0	0	19	5	6	0	0	7	4	4	0	0	192	
4:25 PM	3	62	3	0	0	2	84	1	3	0	5	4	5	0	0	2	4	3	0	0	181	
4:30 PM	2	59	0	1	0	3	143	6	4	0	6	7	12	0	0	3	2	1	0	0	249	
4:35 PM	2	55	2	2	0	1	128	9	2	0	6	3	3	0	0	3	5	4	0	0	225	
4:40 PM	2	62	2	2	0	1	111	6	3	0	5	2	7	0	0	3	6	3	0	0	215	
4:45 PM	4	42	0	2	0	8	154	6	2	0	3	8	3	0	0	6	1	3	0	0	242	
4:50 PM	3	70	3	2	0	4	160	7	6	0	3	3	9	0	0	2	4	4	0	0	280	
4:55 PM	4	49	3	1	0	2	131	5	5	0	4	9	4	0	0	6	7	2	0	0	232	2644
5:00 PM	3	53	1	1	0	2	178	3	5	0	12	4	10	0	0	3	0	2	0	0	277	2732
5:05 PM	3	58	0	1	0	4	153	11	3	0	6	4	10	0	0	4	8	5	0	0	270	2806
5:10 PM	2	59	1	1	0	2	174	9	3	0	3	5	7	0	0	4	7	5	0	0	282	2886
5:15 PM	0	62	4	3	0	5	190	9	2	0	4	6	5	0	0	4	3	8	0	0	305	2950
5:20 PM	1	73	0	0	0	2	150	6	2	0	7	5	6	0	0	6	2	8	0	0	268	3026
5:25 PM	1	65	2	4	0	2	187	2	6	0	8	7	8	0	0	2	5	6	0	0	305	3150
5:30 PM	2	48	2	1	0	3	204	6	7	0	4	3	9	0	0	5	5	4	0	0	303	3204
5:35 PM	1	61	4	3	0	3	214	5	2	0	5	3	5	0	0	2	5	5	0	0	318	3297
5:40 PM	0	85	2	0	0	3	208	3	2	0	6	8	6	0	0	1	1	4	0	0	329	3411
5:45 PM	3	56	3	0	0	10	234	11	1	0	5	5	1	0	0	6	4	2	0	0	341	3510
5:50 PM	3	48	1	0	0	6	201	3	3	0	3	2	6	0	0	2	5	2	0	0	285	3515
5:55 PM	4	58	2	1	0	5	220	4	3	0	4	6	4	0	0	2	5	4	0	0	322	3605

HEAVY-VEHICLE VOLUMES

Time Perio	NB Left	NB Thru	NB Right	SB Left	SB Thru	SB Right	EB Left	EB Thru	EB Right	WB Left	WB Thru	WB Right	Total
4:00 PM	0	0	0	0	0	0	1	0	0	0	0	0	1
4:05 PM	0	2	0	0	3	0	0	1	0	0	0	0	6
4:10 PM	0	0	0	0	0	0	1	0	0	0	0	0	1
4:15 PM	0	1	0	0	0	0	0	0	0	0	0	0	1
4:20 PM	0	1	0	0	2	1	1	0	0	0	0	0	5
4:25 PM	0	2	0	0	0	0	0	0	0	0	0	0	2
4:30 PM	0	2	0	0	0	0	0	0	0	1	0	0	3
4:35 PM	0	2	0	0	3	0	1	0	0	0	0	0	6
4:40 PM	0	1	0	0	1	0	0	0	0	0	0	0	2
4:45 PM	0	1	0	0	0	0	0	0	0	0	0	0	1
4:50 PM	0	0	0	0	1	1	0	0	0	0	0	0	2
4:55 PM	0	2	0	0	1	0	0	0	0	0	0	0	3
5:00 PM	0	1	0	0	3	1	0	0	0	0	0	0	5
5:05 PM	0	3	0	0	1	0	0	0	0	0	0	0	4
5:10 PM	0	0	0	0	1	0	1	0	0	0	0	0	2
5:15 PM	0	1	0	0	2	0	0	0	0	0	0	0	3
5:20 PM	0	1	0	0	1	0	0	0	0	0	0	0	2
5:25 PM	0	0	0	0	0	1	0	0	0	0	0	0	1
5:30 PM	0	0	0	0	1	0	0	0	0	0	0	0	1
5:35 PM	0	0	0	0	1	0	1	0	0	0	0	0	2
5:40 PM	0	3	0	0	0	0	0	0	0	0	0	0	3
5:45 PM	0	1	0	0	3	0	0	0	0	0	0	0	4
5:50 PM	0	0	0	0	1	0	0	0	0	0	0	0	1
5:55 PM	0	2	0	0	1	0	0	0	0	0	0	0	3

PEDESTRIAN VOLUMES

Time Perio	North	South	East	West	Total
4:00 PM	0	2	2	1	5
4:05 PM	0	0	0	0	0
4:10 PM	1	1	0	0	2
4:15 PM	2	0	3	0	5
4:20 PM	0	1	0	0	1
4:25 PM	2	1	0	1	4
4:30 PM	2	1	0	0	3
4:35 PM	1	0	2	0	3
4:40 PM	2	0	0	0	2
4:45 PM	0	1	0	1	2
4:50 PM	1	0	0	0	1
4:55 PM	0	1	0	0	1
5:00 PM	0	0	0	0	0
5:05 PM	0	1	0	0	1
5:10 PM	0	1	0	0	1

5:15 PM	0	0	1	1	2
5:20 PM	1	1	0	0	2
5:25 PM	0	4	0	0	4
5:30 PM	2	1	1	1	5
5:35 PM	1	1	0	0	2
5:40 PM	0	0	0	0	0
5:45 PM	0	0	0	0	0
5:50 PM	2	0	0	0	2
5:55 PM	0	1	1	0	2

BICYCLE VOLUMES

Time Perio	NB Left	NB Thru	NB Right	SB Left	SB Thru	SB Right	EB Left	EB Thru	EB Right	WB Left	WB Thru	WB Right	Total
4:00 PM	0	0	0	0	1	0	0	0	0	0	0	0	1
4:05 PM	0	0	0	0	0	0	0	0	0	0	0	0	0
4:10 PM	0	0	0	0	0	0	0	0	0	0	0	0	0
4:15 PM	0	0	0	0	0	0	0	0	0	0	0	0	0
4:20 PM	0	0	0	0	0	0	0	0	0	0	0	0	0
4:25 PM	0	0	0	0	0	0	0	0	0	0	1	0	1
4:30 PM	0	0	0	1	0	0	0	0	0	0	0	0	1
4:35 PM	0	0	0	0	0	0	0	0	0	0	0	0	0
4:40 PM	0	0	0	0	0	0	0	0	0	0	0	0	0
4:45 PM	0	0	0	0	0	0	0	0	0	0	0	0	0
4:50 PM	0	0	0	0	0	0	0	0	0	0	0	0	0
4:55 PM	0	0	0	0	0	0	0	0	0	0	0	0	0
5:00 PM	0	0	0	0	1	0	0	0	0	0	0	0	1
5:05 PM	0	0	0	0	0	0	0	0	0	0	0	1	1
5:10 PM	0	0	0	0	0	0	0	0	0	0	0	0	0
5:15 PM	0	0	0	0	0	0	0	1	0	0	0	0	1
5:20 PM	0	0	0	0	0	0	0	0	0	0	0	0	0
5:25 PM	0	0	0	0	0	0	0	0	0	0	1	0	1
5:30 PM	0	0	0	0	0	0	0	0	0	0	0	0	0
5:35 PM	0	0	0	0	0	0	0	0	0	0	0	0	0
5:40 PM	0	0	0	0	0	0	0	0	0	0	0	0	0
5:45 PM	0	0	0	0	0	0	0	0	0	0	0	0	0
5:50 PM	0	0	0	0	0	0	0	0	0	0	0	0	0
5:55 PM	0	0	0	0	0	0	0	0	0	0	0	0	0

als

QUALITY COUNTS REPORT
==========

Intersectio S Mathilda W Iowa Ave
City/State: Sunnyvale CA
QCJobNo: 10849805
ClientID:
Date: ########
Comments:

PEAK HOUI 8:00 AM
PEAK HOUI 9:00 AM
PEAK 15-M 8:45 AM
PEAK 15-M 9:00 AM
PHF 0.93

Lane Configuration:

	SIGNAL	SBLane1	SBLane2	SBLane3	SBLane4	SBLane5	SBLane6	SBLane7					
		TR	T	T	L	L							SIGNAL
EBLane7											R		WBLane1
EBLane6											T		WBLane2
EBLane5											L		WBLane3
EBLane4													WBLane4
EBLane3	L												WBLane5
EBLane2	T												WBLane6
EBLane1	TR												WBLane7
SIGNAL					L	T	T	TR					
		NBLane7	NBLane6	NBLane5	NBLane4	NBLane3	NBLane2	NBLane1	SIGNAL				

PEAK-HOUR VOLUMES

NBLeft	NBThru	NBRight	SBLeft	SBThru	SBRight	EBLeft	EBThru	EBRight	WBLeft	WBThru	WBRight	NBEntering	SBEntering	EBEntering	WBEnterin	NBLeaving	SBLeaving	EBLeaving	WBLeaving
15	2187	38	34	752	61	47	39	21	20	31	31	2240	847	107	82	2266	795	110	105

PERCENT HEAVY VEHICLES

NBLeft	NBThru	NBRight	SBLeft	SBThru	SBRight	EBLeft	EBThru	EBRight	WBLeft	WBThru	WBRight	NBEntering	SBEntering	EBEntering	WBEnterin	NBLeaving	SBLeaving	EBLeaving	WBLeaving
0	0.5	0	5.9	3.6	0	2.1	2.6	4.8	0	0	16.1	0.5	3.4	2.8	6.1	0.8	3.5	2.7	0

PEAK-HOUR VOLUMES - PEDESTRIANS

North	South	East	West
4	3	4	4

PEAK-HOUR VOLUMES - BICYCLES

NBLeft	NBThru	NBRight	SBLeft	SBThru	SBRight	EBLeft	EBThru	EBRight	WBLeft	WBThru	WBRight
0	1	1	0	1	0	0	2	0	0	0	0

PEAK 15-MIN FLOWRATES

VehicleTyp	NBLeft	NBThru	NBRight	NBUTurn	NBRTOR	SBLeft	SBThru	SBRight	SBUTurn	SBRTOR	EBLeft	EBThru	EBRight	EBUTurn	EBRTOR	WBLeft	WBThru	WBRight	WBUTurn	WBRTOR	Total
All Vehicles	24	2376	32	4	0	40	812	72	0	0	24	36	24	0	0	36	28	32	0	0	3540
Heavy Truc	0	24	0			0	28	0			0	0	0			0	0	4			56
Pedestrians		0					0					8					8				16
Bicycles	0	0	0			0	1	0			0	1	0			0	0	0			2

ALL-VEHICLE VOLUMES

Time Perio	NB Left	NB Thru	NB Right	NB U-Turn	NB RTOR	SB Left	SB Thru	SB Right	SB U-Turn	SB RTOR	EB Left	EB Thru	EB Right	EB U-Turn	EB RTOR	WB Left	WB Thru	WB Right	WB U-Turn	WB RTOR	Total	Hourly Tota
7:00 AM	0	48	0	0	0	0	30	1	0	0	5	0	0	0	0	2	3	3	0	0	92	
7:05 AM	0	67	0	0	0	0	26	1	0	0	0	2	1	0	0	0	2	0	0	0	99	
7:10 AM	2	67	1	0	0	0	32	1	0	0	3	0	2	0	0	0	1	1	0	0	110	
7:15 AM	0	63	1	1	0	0	29	1	0	0	0	0	5	0	0	0	1	1	0	0	102	
7:20 AM	2	60	1	0	0	0	49	2	0	0	0	1	1	0	0	1	1	0	0	0	118	
7:25 AM	0	61	3	0	0	0	39	0	0	0	2	0	3	0	0	0	0	2	0	0	110	
7:30 AM	0	95	1	0	0	2	44	2	0	0	0	0	1	0	0	2	0	3	0	0	150	
7:35 AM	0	69	0	1	0	1	51	2	0	0	1	0	2	0	0	0	1	2	0	0	130	
7:40 AM	0	120	1	1	0	3	62	2	1	0	0	1	0	0	0	3	0	1	0	0	195	
7:45 AM	0	157	2	0	0	1	53	4	0	0	3	1	3	0	0	0	0	1	0	0	225	
7:50 AM	2	98	2	2	0	2	61	6	1	0	5	5	3	0	0	0	3	4	0	0	194	
7:55 AM	1	187	4	0	0	1	75	8	0	0	7	6	0	0	0	0	2	1	0	0	292	1817
8:00 AM	0	141	2	1	0	1	49	3	0	0	4	1	1	0	0	0	0	1	0	0	204	1929
8:05 AM	1	133	4	0	0	1	53	3	0	0	6	4	2	0	0	1	3	3	0	0	214	2044
8:10 AM	1	189	1	0	0	3	78	9	1	0	4	2	0	0	0	1	5	2	0	0	296	2230
8:15 AM	1	172	4	0	0	6	46	4	0	0	9	4	0	0	0	1	3	3	0	0	253	2381
8:20 AM	0	192	3	0	0	2	71	5	0	0	9	5	1	0	0	3	1	5	0	0	297	2560
8:25 AM	1	193	5	0	0	6	54	4	0	0	5	5	7	0	0	0	3	3	0	0	286	2736
8:30 AM	2	193	2	0	0	1	54	3	0	0	2	4	2	0	0	1	0	1	0	0	265	2851
8:35 AM	0	181	5	0	0	0	67	6	0	0	1	3	2	0	0	3	5	3	0	0	276	2997
8:40 AM	1	199	4	0	0	3	77	6	0	0	1	2	0	0	0	1	4	2	0	0	300	3102
8:45 AM	3	185	1	1	0	6	71	6	0	0	3	1	2	0	0	5	3	2	0	0	289	3166
8:50 AM	1	219	3	0	0	0	57	4	0	0	1	2	1	0	0	3	1	3	0	0	295	3267
8:55 AM	2	190	4	0	0	4	75	8	0	0	2	6	3	0	0	1	3	3	0	0	301	3276

HEAVY-VEHICLE VOLUMES

Time Perio	NB Left	NB Thru	NB Right	SB Left	SB Thru	SB Right	EB Left	EB Thru	EB Right	WB Left	WB Thru	WB Right	Total
7:00 AM	0	0	0	0	8	0	2	0	0	0	0	2	12
7:05 AM	0	1	0	0	0	0	0	1	0	0	0	0	2
7:10 AM	0	1	0	0	1	0	0	0	0	0	0	0	2
7:15 AM	0	2	0	0	3	0	0	0	0	0	0	0	5
7:20 AM	0	0	0	0	2	0	0	0	0	0	0	0	2
7:25 AM	0	0	1	0	0	0	0	0	0	0	0	1	2
7:30 AM	0	0	0	1	2	0	0	0	0	0	0	0	3
7:35 AM	0	1	0	0	3	0	0	0	0	0	0	0	4
7:40 AM	0	3	1	0	2	0	0	0	0	0	0	0	6
7:45 AM	0	0	0	0	2	0	1	1	1	0	0	1	6
7:50 AM	0	0	0	0	1	0	0	0	0	0	0	0	1
7:55 AM	0	0	0	0	1	0	0	0	0	0	0	0	1
8:00 AM	0	0	0	0	1	0	0	0	0	0	0	1	2
8:05 AM	0	0	0	0	2	0	0	0	1	0	0	1	4
8:10 AM	0	0	0	0	3	0	0	0	0	0	0	0	3
8:15 AM	0	2	0	0	1	0	0	0	0	0	0	0	3
8:20 AM	0	1	0	0	4	0	1	0	0	0	0	1	7
8:25 AM	0	0	0	2	3	0	0	0	0	0	0	0	5
8:30 AM	0	0	0	0	4	0	0	0	0	0	0	0	4
8:35 AM	0	0	0	0	2	0	0	1	0	0	0	1	4
8:40 AM	0	3	0	0	0	0	0	0	0	0	0	0	3
8:45 AM	0	0	0	0	0	0	0	0	0	0	0	0	0
8:50 AM	0	3	0	0	4	0	0	0	0	0	0	1	8
8:55 AM	0	3	0	0	3	0	0	0	0	0	0	0	6

PEDESTRIAN VOLUMES

Time Perio	North	South	East	West	Total
7:00 AM	0	0	0	0	0
7:05 AM	0	0	0	0	0
7:10 AM	0	0	0	0	0
7:15 AM	0	0	1	0	1
7:20 AM	0	0	0	0	0
7:25 AM	0	0	0	0	0
7:30 AM	0	0	0	0	0
7:35 AM	0	0	0	0	0
7:40 AM	0	0	0	0	0
7:45 AM	0	0	0	0	0
7:50 AM	0	0	0	1	1
7:55 AM	1	0	0	0	1
8:00 AM	0	1	0	0	1
8:05 AM	0	0	0	0	0
8:10 AM	2	1	0	1	4

8:15 AM	1	0	0	0	1
8:20 AM	0	0	0	0	0
8:25 AM	0	0	0	0	0
8:30 AM	0	1	2	1	4
8:35 AM	0	0	0	0	0
8:40 AM	1	0	0	0	1
8:45 AM	0	0	1	1	2
8:50 AM	0	0	0	0	0
8:55 AM	0	0	1	1	2

BICYCLE VOLUMES

Time Perio	NB Left	NB Thru	NB Right	SB Left	SB Thru	SB Right	EB Left	EB Thru	EB Right	WB Left	WB Thru	WB Right	Total
7:00 AM	0	0	0	0	0	0	0	0	0	0	0	0	0
7:05 AM	0	0	0	0	0	0	0	0	0	0	0	0	0
7:10 AM	0	0	0	0	0	0	0	0	0	0	0	0	0
7:15 AM	0	0	0	0	0	0	0	0	0	0	0	0	0
7:20 AM	0	1	0	0	0	0	0	0	0	0	0	0	1
7:25 AM	0	0	0	0	0	0	0	1	0	0	0	0	1
7:30 AM	0	0	0	0	0	0	0	0	0	0	0	0	0
7:35 AM	0	0	0	0	0	0	0	0	0	0	0	0	0
7:40 AM	0	0	0	0	0	0	0	0	0	0	0	0	0
7:45 AM	0	0	0	0	0	0	0	0	0	0	0	0	0
7:50 AM	0	0	0	0	0	0	0	0	0	0	0	0	0
7:55 AM	0	0	0	0	0	0	0	0	0	0	0	0	0
8:00 AM	0	0	0	0	0	0	0	0	0	0	0	0	0
8:05 AM	0	0	0	0	0	0	0	0	0	0	0	0	0
8:10 AM	0	0	0	0	0	0	0	0	0	0	0	0	0
8:15 AM	0	0	0	0	0	0	0	0	0	0	0	0	0
8:20 AM	0	0	0	0	0	0	0	1	0	0	0	0	1
8:25 AM	0	0	0	0	0	0	0	0	0	0	0	0	0
8:30 AM	0	1	1	0	0	0	0	0	0	0	0	0	2
8:35 AM	0	0	0	0	0	0	0	0	0	0	0	0	0
8:40 AM	0	0	0	0	0	0	0	0	0	0	0	0	0
8:45 AM	0	0	0	0	0	0	0	0	0	0	0	0	0
8:50 AM	0	0	0	0	1	0	0	0	0	0	0	0	1
8:55 AM	0	0	0	0	0	0	0	1	0	0	0	0	1

als

QUALITY COUNTS REPORT
==========

Intersectio S Mathilda W Iowa Ave
City/State: Sunnyvale CA
QCJobNo: 10849806
ClientID:
Date: ########
Comments:

PEAK HOUI 5:00 PM
PEAK HOUI 6:00 PM
PEAK 15-M 5:45 PM
PEAK 15-M 6:00 PM
PHF 0.92

Lane Configuration:

	SIGNAL	SBLane1	SBLane2	SBLane3	SBLane4	SBLane5	SBLane6	SBLane7				
		TR	T	T	L	L						SIGNAL
EBLane7										R		WBLane1
EBLane6										T		WBLane2
EBLane5										L		WBLane3
EBLane4												WBLane4
EBLane3	L											WBLane5
EBLane2	T											WBLane6
EBLane1	TR											WBLane7
SIGNAL					L	T	T	TR				
		NBLane7	NBLane6	NBLane5	NBLane4	NBLane3	NBLane2	NBLane1	SIGNAL			

PEAK-HOUR VOLUMES

NBLeft	NBThru	NBRight	SBLeft	SBThru	SBRight	EBLeft	EBThru	EBRight	WBLeft	WBThru	WBRight	NBEntering	SBEntering	EBEntering	WBEnterin	NBLeaving	SBLeaving	EBLeaving	WBLeaving
37	775	35	94	2358	19	29	54	36	65	52	47	847	2471	119	164	857	2470	177	97

PERCENT HEAVY VEHICLES

NBLeft	NBThru	NBRight	SBLeft	SBThru	SBRight	EBLeft	EBThru	EBRight	WBLeft	WBThru	WBRight	NBEntering	SBEntering	EBEntering	WBEnterin	NBLeaving	SBLeaving	EBLeaving	WBLeaving
0	0.9	0	0	0.5	0	3.4	0	0	0	0	8.5	0.8	0.4	0.8	2.4	1.4	0.4	0	0

PEAK-HOUR VOLUMES - PEDESTRIANS

North	South	East	West
0	3	3	4

PEAK-HOUR VOLUMES - BICYCLES

NBLeft	NBThru	NBRight	SBLeft	SBThru	SBRight	EBLeft	EBThru	EBRight	WBLeft	WBThru	WBRight
0	2	0	0	1	0	0	0	1	0	1	0

PEAK 15-MIN FLOWRATES

VehicleTyp	NBLeft	NBThru	NBRight	NBUTurn	NBRTOR	SBLeft	SBThru	SBRight	SBUTurn	SBRTOR	EBLeft	EBThru	EBRight	EBUTurn	EBRTOR	WBLeft	WBThru	WBRight	WBUTurn	WBRTOR	Total
All Vehicles	20	740	52	8	0	64	2644	36	8	0	24	84	32	0	0	100	60	44	0	0	3916
Heavy Truc	0	4	0			0	12	0			0	0	0			0	0	4			20
Pedestrians		4					0					4					0				8
Bicycles	0	0	0			0	0	0			0	0	0			0	0	0			0

ALL-VEHICLE VOLUMES

Time Perio	NB Left	NB Thru	NB Right	NB U-Turn	NB RTOR	SB Left	SB Thru	SB Right	SB U-Turn	SB RTOR	EB Left	EB Thru	EB Right	EB U-Turn	EB RTOR	WB Left	WB Thru	WB Right	WB U-Turn	WB RTOR	Total	Hourly Tota
4:00 PM	4	67	4	1	0	8	112	1	2	0	1	4	2	0	0	5	1	4	0	0	216	
4:05 PM	2	53	3	0	0	8	76	0	0	0	3	4	4	0	0	6	5	4	0	0	168	
4:10 PM	0	45	6	1	0	7	113	4	0	0	0	0	2	0	0	3	2	8	0	0	191	
4:15 PM	4	58	8	2	0	6	115	2	0	0	0	3	2	0	0	1	4	4	0	0	209	
4:20 PM	2	60	5	1	0	6	104	1	2	0	2	4	2	0	0	6	1	1	0	0	197	
4:25 PM	0	70	1	1	0	4	105	1	1	0	5	1	1	0	0	8	5	3	0	0	206	
4:30 PM	3	56	4	1	0	4	125	1	0	0	4	4	2	0	0	11	7	8	0	0	230	
4:35 PM	2	42	4	0	0	5	116	2	0	0	8	7	1	0	0	3	7	4	0	0	201	
4:40 PM	0	52	3	0	0	6	127	3	0	0	7	4	0	0	0	3	4	2	0	0	211	
4:45 PM	0	44	1	1	0	6	134	2	3	0	4	5	4	0	0	9	1	3	0	0	217	
4:50 PM	1	80	6	2	0	4	158	0	1	0	1	2	0	0	0	3	2	3	0	0	263	
4:55 PM	1	27	2	0	0	5	141	1	0	0	2	2	2	0	0	9	4	6	0	0	202	2511
5:00 PM	0	78	5	1	0	11	164	2	0	0	5	2	4	0	0	5	5	5	0	0	287	2582
5:05 PM	3	62	1	1	0	7	183	2	1	0	3	7	1	0	0	3	4	2	0	0	280	2694
5:10 PM	2	55	3	1	0	6	178	2	1	0	5	8	5	0	0	7	3	5	0	0	281	2784
5:15 PM	4	62	2	2	0	5	207	0	0	0	3	4	4	0	0	7	5	7	0	0	312	2887
5:20 PM	1	74	5	0	0	6	160	0	0	0	1	1	3	0	0	3	5	4	0	0	263	2953
5:25 PM	1	72	1	1	0	9	191	0	0	0	1	2	2	0	0	4	3	5	0	0	292	3039
5:30 PM	3	53	1	0	0	9	208	3	1	0	2	4	3	0	0	4	5	4	0	0	300	3109
5:35 PM	3	78	2	1	0	10	214	0	0	0	2	1	2	0	0	5	4	1	0	0	323	3231
5:40 PM	4	56	2	2	0	9	192	1	1	0	1	4	4	0	0	2	3	3	0	0	284	3304
5:45 PM	1	68	4	0	0	6	238	2	1	0	2	5	2	0	0	1	7	5	0	0	342	3429
5:50 PM	2	50	3	1	0	5	199	2	1	0	3	6	3	0	0	13	4	3	0	0	295	3461
5:55 PM	2	67	6	1	0	5	224	5	0	0	1	10	3	0	0	11	4	3	0	0	342	3601

HEAVY-VEHICLE VOLUMES

Time Perio	NB Left	NB Thru	NB Right	SB Left	SB Thru	SB Right	EB Left	EB Thru	EB Right	WB Left	WB Thru	WB Right	Total
4:00 PM	0	1	0	0	0	0	0	0	0	0	0	1	2
4:05 PM	0	1	0	0	2	0	0	0	0	0	0	0	3
4:10 PM	0	1	0	1	0	1	0	0	0	0	0	0	3
4:15 PM	0	0	0	0	0	0	0	0	0	0	0	1	1
4:20 PM	0	1	0	0	3	0	0	0	0	0	0	0	4
4:25 PM	0	2	0	0	0	0	0	0	0	0	0	0	2
4:30 PM	0	1	0	0	0	0	0	0	0	0	0	2	3
4:35 PM	0	0	0	0	1	0	0	1	1	0	0	0	3
4:40 PM	0	3	0	0	2	0	0	0	0	0	0	1	6
4:45 PM	0	1	0	0	0	0	0	0	0	0	0	0	1
4:50 PM	0	0	0	0	2	0	0	0	0	0	0	0	2
4:55 PM	0	1	0	0	1	0	0	0	0	0	0	0	2
5:00 PM	0	0	0	0	2	0	1	0	0	0	0	1	4
5:05 PM	0	2	0	0	1	0	0	0	0	0	0	0	3
5:10 PM	0	2	0	0	0	0	0	0	0	0	0	0	2
5:15 PM	0	0	0	0	2	0	0	0	0	0	0	0	2
5:20 PM	0	0	0	0	1	0	0	0	0	0	0	1	2
5:25 PM	0	0	0	0	1	0	0	0	0	0	0	0	1
5:30 PM	0	0	0	0	1	0	0	0	0	0	0	0	1
5:35 PM	0	0	0	0	0	0	0	0	0	0	0	1	1
5:40 PM	0	2	0	0	0	0	0	0	0	0	0	0	2
5:45 PM	0	0	0	0	3	0	0	0	0	0	0	0	3
5:50 PM	0	0	0	0	0	0	0	0	0	0	0	1	1
5:55 PM	0	1	0	0	0	0	0	0	0	0	0	0	1

PEDESTRIAN VOLUMES

Time Perio	North	South	East	West	Total
4:00 PM	1	1	0	1	3
4:05 PM	0	1	1	0	2
4:10 PM	0	1	0	1	2
4:15 PM	0	1	0	0	1
4:20 PM	0	0	1	0	1
4:25 PM	0	1	1	2	4
4:30 PM	2	0	1	0	3
4:35 PM	0	0	2	0	2
4:40 PM	1	0	0	0	1
4:45 PM	0	0	0	1	1
4:50 PM	0	0	0	0	0
4:55 PM	0	1	1	0	2
5:00 PM	0	0	0	0	0
5:05 PM	0	0	0	0	0
5:10 PM	0	0	0	0	0

5:15 PM	0	0	0	1	1
5:20 PM	0	0	1	1	2
5:25 PM	0	0	0	0	0
5:30 PM	0	0	1	0	1
5:35 PM	0	1	1	1	3
5:40 PM	0	1	0	0	1
5:45 PM	0	1	0	1	2
5:50 PM	0	0	0	0	0
5:55 PM	0	0	0	0	0

BICYCLE VOLUMES

Time Perio	NB Left	NB Thru	NB Right	SB Left	SB Thru	SB Right	EB Left	EB Thru	EB Right	WB Left	WB Thru	WB Right	Total
4:00 PM	0	1	0	0	1	0	0	0	0	0	0	0	2
4:05 PM	0	0	0	0	0	0	0	0	0	0	0	0	0
4:10 PM	0	0	0	0	0	0	0	0	0	0	0	0	0
4:15 PM	0	0	0	0	0	0	0	0	0	0	1	0	1
4:20 PM	0	0	0	0	0	0	0	0	0	0	0	0	0
4:25 PM	0	0	0	0	0	0	0	0	0	0	0	0	0
4:30 PM	0	0	0	0	0	0	0	1	0	0	2	0	3
4:35 PM	0	0	0	0	0	0	0	0	0	0	0	0	0
4:40 PM	0	0	0	0	0	0	0	0	0	0	1	0	1
4:45 PM	0	0	0	0	0	0	0	0	0	0	0	0	0
4:50 PM	0	0	0	0	0	0	0	0	0	0	0	0	0
4:55 PM	0	0	0	0	0	0	0	0	0	0	0	0	0
5:00 PM	0	0	0	0	1	0	0	0	0	0	0	0	1
5:05 PM	0	1	0	0	0	0	0	0	0	0	0	0	1
5:10 PM	0	0	0	0	0	0	0	0	0	0	0	0	0
5:15 PM	0	0	0	0	0	0	0	0	0	0	0	0	0
5:20 PM	0	0	0	0	0	0	0	0	0	0	0	0	0
5:25 PM	0	0	0	0	0	0	0	0	0	0	1	0	1
5:30 PM	0	1	0	0	0	0	0	0	0	0	0	0	1
5:35 PM	0	0	0	0	0	0	0	0	1	0	0	0	1
5:40 PM	0	0	0	0	0	0	0	0	0	0	0	0	0
5:45 PM	0	0	0	0	0	0	0	0	0	0	0	0	0
5:50 PM	0	0	0	0	0	0	0	0	0	0	0	0	0
5:55 PM	0	0	0	0	0	0	0	0	0	0	0	0	0

als

QUALITY COUNTS REPORT
==========

Intersectio S Mathilda W McKinley Ave
City/State: Sunnyvale CA
QCJobNo: 10849807
ClientID:
Date: ########
Comments:

PEAK HOUI 8:00 AM
PEAK HOUI 9:00 AM
PEAK 15-M 8:40 AM
PEAK 15-M 8:55 AM
PHF 0.93

Lane Configuration:

	SIGNAL	SBLane1	SBLane2	SBLane3	SBLane4	SBLane5	SBLane6	SBLane7				
		TR	T	T	L	L						SIGNAL
EBLane7										R		WBLane1
EBLane6										L		WBLane2
EBLane5										L		WBLane3
EBLane4												WBLane4
EBLane3												WBLane5
EBLane2	LT											WBLane6
EBLane1	TR											WBLane7
SIGNAL					L	T	T	TR				
		NBLane7	NBLane6	NBLane5	NBLane4	NBLane3	NBLane2	NBLane1	SIGNAL			

PEAK-HOUR VOLUMES

NBLeft	NBThru	NBRight	SBLeft	SBThru	SBRight	EBLeft	EBThru	EBRight	WBLeft	WBThru	WBRight	NBEntering	SBEntering	EBEntering	WBEnterin	NBLeaving	SBLeaving	EBLeaving	WBLeaving
39	2168	79	42	807	49	65	19	21	20	0	45	2286	898	105	65	2285	853	133	83

PERCENT HEAVY VEHICLES

NBLeft	NBThru	NBRight	SBLeft	SBThru	SBRight	EBLeft	EBThru	EBRight	WBLeft	WBThru	WBRight	NBEntering	SBEntering	EBEntering	WBEnterin	NBLeaving	SBLeaving	EBLeaving	WBLeaving
0	0.9	0	2.4	3.1	2	0	0	4.8	10	0	6.7	0.8	3	1	7.7	1	3.3	0.8	1.2

PEAK-HOUR VOLUMES - PEDESTRIANS

North	South	East	West
5	5	5	6

PEAK-HOUR VOLUMES - BICYCLES

NBLeft	NBThru	NBRight	SBLeft	SBThru	SBRight	EBLeft	EBThru	EBRight	WBLeft	WBThru	WBRight
0	1	0	1	0	0	0	0	0	0	1	0

PEAK 15-MIN FLOWRATES

VehicleTyp	NBLeft	NBThru	NBRight	NBUTurn	NBRTOR	SBLeft	SBThru	SBRight	SBUTurn	SBRTOR	EBLeft	EBThru	EBRight	EBUTurn	EBRTOR	WBLeft	WBThru	WBRight	WBUTurn	WBRTOR	Total
All Vehicles	40	2420	92	0	0	56	840	16	8	0	28	20	28	0	0	12	0	60	0	0	3620
Heavy Truc	0	28	0			0	16	0			0	0	0			0	0	8			52
Pedestrians		4					12					12					4				32
Bicycles	0	0	0			0	0	0			0	0	0			0	0	0			0

ALL-VEHICLE VOLUMES

Time Perio	NB Left	NB Thru	NB Right	NB U-Turn	NB RTOR	SB Left	SB Thru	SB Right	SB U-Turn	SB RTOR	EB Left	EB Thru	EB Right	EB U-Turn	EB RTOR	WB Left	WB Thru	WB Right	WB U-Turn	WB RTOR	Total	Hourly Tota
7:00 AM	0	54	2	0	0	2	37	0	0	0	2	0	0	0	0	0	0	1	0	0	98	
7:05 AM	2	68	1	1	0	1	21	0	0	0	2	1	0	0	0	0	0	1	0	0	98	
7:10 AM	0	64	2	0	0	2	40	2	0	0	0	0	0	0	0	0	0	1	0	0	111	
7:15 AM	0	63	1	1	0	1	31	0	1	0	0	0	0	0	0	1	0	2	0	0	101	
7:20 AM	0	78	5	1	0	1	35	0	0	0	2	0	2	0	0	0	0	0	0	0	124	
7:25 AM	1	65	2	2	0	3	53	2	0	0	1	0	3	0	0	0	0	1	0	0	133	
7:30 AM	2	87	3	0	0	2	36	1	1	0	3	0	1	0	0	1	0	1	0	0	138	
7:35 AM	2	59	1	0	0	2	55	2	0	0	2	0	0	0	0	0	0	3	0	0	126	
7:40 AM	0	128	2	1	0	6	48	1	0	0	2	2	2	0	0	0	0	1	0	0	193	
7:45 AM	3	147	3	0	0	6	69	12	3	0	0	0	1	0	0	1	0	4	0	0	249	
7:50 AM	4	144	3	0	0	2	62	8	0	0	3	0	0	0	0	1	0	1	0	0	228	
7:55 AM	4	151	5	2	0	4	67	20	2	0	7	0	2	0	0	2	0	1	0	0	267	1866
8:00 AM	0	129	5	0	0	1	48	4	0	0	7	3	0	0	0	1	0	4	0	0	202	1970
8:05 AM	4	118	9	0	0	2	54	12	1	0	6	2	1	0	0	3	0	2	0	0	214	2086
8:10 AM	11	205	3	2	0	4	85	18	1	0	5	0	1	0	0	2	0	3	0	0	340	2315
8:15 AM	1	169	8	0	0	0	51	5	0	0	10	2	1	0	0	0	0	6	0	0	253	2467
8:20 AM	2	188	7	1	0	3	78	1	0	0	8	3	3	0	0	3	0	4	0	0	301	2644
8:25 AM	2	207	4	1	0	3	59	0	0	0	10	3	1	0	0	1	0	2	0	0	293	2804
8:30 AM	1	196	5	0	0	1	64	1	2	0	4	0	6	0	0	2	0	2	0	0	284	2950
8:35 AM	1	188	10	0	0	3	78	1	0	0	5	0	0	0	0	0	0	3	0	0	289	3113
8:40 AM	2	228	7	0	0	4	72	1	0	0	1	3	4	0	0	0	0	6	0	0	328	3248
8:45 AM	6	190	7	0	0	8	58	1	2	0	0	0	3	0	0	1	0	7	0	0	283	3282
8:50 AM	2	187	9	0	0	2	80	2	0	0	6	2	0	0	0	2	0	2	0	0	294	3348
8:55 AM	2	163	5	1	0	4	80	3	1	0	3	1	1	0	0	5	0	4	0	0	273	3354

HEAVY-VEHICLE VOLUMES

Time Perio	NB Left	NB Thru	NB Right	SB Left	SB Thru	SB Right	EB Left	EB Thru	EB Right	WB Left	WB Thru	WB Right	Total
7:00 AM	0	5	0	0	8	0	0	0	0	0	0	0	13
7:05 AM	0	1	0	0	0	0	0	0	0	0	0	0	1
7:10 AM	0	2	0	0	1	0	0	0	0	0	0	0	3
7:15 AM	0	0	0	0	4	0	0	0	0	0	0	0	4
7:20 AM	0	0	0	0	2	0	0	0	0	0	0	0	2
7:25 AM	0	1	0	0	2	0	0	0	0	0	0	0	3
7:30 AM	0	0	0	0	3	1	0	0	0	0	0	0	4
7:35 AM	0	1	0	0	0	1	0	0	0	0	0	0	2
7:40 AM	0	3	0	0	2	0	0	0	0	0	0	0	5
7:45 AM	0	1	0	0	2	0	0	0	0	1	0	1	5
7:50 AM	0	1	1	0	2	0	0	0	0	0	0	0	4
7:55 AM	0	0	0	0	0	1	1	0	0	0	0	0	2
8:00 AM	0	1	0	0	1	0	0	0	0	0	0	0	2
8:05 AM	0	1	0	0	2	0	0	0	0	1	0	0	4
8:10 AM	0	1	0	0	2	1	0	0	0	0	0	1	5
8:15 AM	0	3	0	0	1	0	0	0	0	0	0	0	4
8:20 AM	0	3	0	0	5	0	0	0	0	0	0	0	8
8:25 AM	0	0	0	0	5	0	0	0	0	0	0	0	5
8:30 AM	0	0	0	0	2	0	0	0	1	0	0	0	3
8:35 AM	0	2	0	0	1	0	0	0	0	0	0	0	3
8:40 AM	0	3	0	0	0	0	0	0	0	0	0	1	4
8:45 AM	0	2	0	0	1	0	0	0	0	0	0	0	3
8:50 AM	0	2	0	0	3	0	0	0	0	0	0	1	6
8:55 AM	0	1	0	1	2	0	0	0	0	1	0	0	5

PEDESTRIAN VOLUMES

Time Perio	North	South	East	West	Total
7:00 AM	0	0	0	0	0
7:05 AM	0	0	0	0	0
7:10 AM	1	0	1	0	2
7:15 AM	0	0	1	0	1
7:20 AM	0	0	0	0	0
7:25 AM	0	1	0	0	1
7:30 AM	0	1	1	0	2
7:35 AM	0	0	0	0	0
7:40 AM	1	0	0	0	1
7:45 AM	0	0	0	0	0
7:50 AM	0	0	0	0	0
7:55 AM	0	0	0	0	0
8:00 AM	0	1	0	0	1
8:05 AM	0	2	0	0	2
8:10 AM	0	0	0	0	0

8:15 AM	1	0	1	0	2
8:20 AM	1	0	0	1	2
8:25 AM	0	1	0	1	2
8:30 AM	0	0	3	1	4
8:35 AM	0	0	0	0	0
8:40 AM	0	0	0	2	2
8:45 AM	2	0	1	1	4
8:50 AM	1	1	0	0	2
8:55 AM	0	0	0	0	0

BICYCLE VOLUMES

Time Perio	NB Left	NB Thru	NB Right	SB Left	SB Thru	SB Right	EB Left	EB Thru	EB Right	WB Left	WB Thru	WB Right	Total
7:00 AM	0	0	0	0	0	0	0	0	0	0	0	0	0
7:05 AM	0	0	0	0	0	0	0	0	0	0	0	0	0
7:10 AM	0	0	0	0	0	0	0	0	0	0	1	0	1
7:15 AM	0	0	0	0	0	0	0	0	0	0	0	0	0
7:20 AM	0	1	0	0	0	0	0	0	0	0	0	0	1
7:25 AM	0	0	0	0	0	0	0	0	0	0	0	0	0
7:30 AM	0	0	0	0	0	0	0	0	0	0	0	0	0
7:35 AM	0	1	0	0	0	0	0	0	0	0	0	0	1
7:40 AM	0	0	0	0	0	0	0	0	0	0	0	0	0
7:45 AM	0	0	0	0	0	0	0	0	0	0	0	0	0
7:50 AM	0	0	0	0	0	0	0	0	0	0	0	1	1
7:55 AM	0	0	0	0	0	0	0	0	0	0	0	0	0
8:00 AM	0	0	0	0	0	0	0	0	0	0	1	0	1
8:05 AM	0	0	0	0	0	0	0	0	0	0	0	0	0
8:10 AM	0	0	0	1	0	0	0	0	0	0	0	0	1
8:15 AM	0	0	0	0	0	0	0	0	0	0	0	0	0
8:20 AM	0	0	0	0	0	0	0	0	0	0	0	0	0
8:25 AM	0	0	0	0	0	0	0	0	0	0	0	0	0
8:30 AM	0	1	0	0	0	0	0	0	0	0	0	0	1
8:35 AM	0	0	0	0	0	0	0	0	0	0	0	0	0
8:40 AM	0	0	0	0	0	0	0	0	0	0	0	0	0
8:45 AM	0	0	0	0	0	0	0	0	0	0	0	0	0
8:50 AM	0	0	0	0	0	0	0	0	0	0	0	0	0
8:55 AM	0	0	0	0	0	0	0	0	0	0	0	0	0

als

QUALITY COUNTS REPORT
==========

Intersectio S Mathilda W McKinley Ave
City/State: Sunnyvale CA
QCJobNo: 10849808
ClientID:
Date: ########
Comments:

PEAK HOUI 5:00 PM
PEAK HOUI 6:00 PM
PEAK 15-M 5:35 PM
PEAK 15-M 5:50 PM
PHF 0.86

Lane Configuration:

	SIGNAL	SBLane1	SBLane2	SBLane3	SBLane4	SBLane5	SBLane6	SBLane7		
		TR	T	T	L	L				SIGNAL
EBLane7									R	WBLane1
EBLane6									L	WBLane2
EBLane5									L	WBLane3
EBLane4										WBLane4
EBLane3										WBLane5
EBLane2	LT									WBLane6
EBLane1	TR									WBLane7
SIGNAL					L	T	T	TR		
		NBLane7	NBLane6	NBLane5	NBLane4	NBLane3	NBLane2	NBLane1	SIGNAL	

PEAK-HOUR VOLUMES

NBLeft	NBThru	NBRight	SBLeft	SBThru	SBRight	EBLeft	EBThru	EBRight	WBLeft	WBThru	WBRight	NBEntering	SBEntering	EBEntering	WBEnterin	NBLeaving	SBLeaving	EBLeaving	WBLeaving
41	769	47	58	2346	43	73	18	46	86	0	65	857	2447	137	151	922	2487	108	75

PERCENT HEAVY VEHICLES

NBLeft	NBThru	NBRight	SBLeft	SBThru	SBRight	EBLeft	EBThru	EBRight	WBLeft	WBThru	WBRight	NBEntering	SBEntering	EBEntering	WBEnterin	NBLeaving	SBLeaving	EBLeaving	WBLeaving
0	2	0	0	0.3	0	1.4	0	0	1.2	0	3.1	1.8	0.3	0.7	2	2	0.4	0	0

PEAK-HOUR VOLUMES - PEDESTRIANS

North	South	East	West
4	3	1	1

PEAK-HOUR VOLUMES - BICYCLES

NBLeft	NBThru	NBRight	SBLeft	SBThru	SBRight	EBLeft	EBThru	EBRight	WBLeft	WBThru	WBRight
0	0	0	0	1	0	0	3	0	0	0	0

PEAK 15-MIN FLOWRATES

VehicleTyp	NBLeft	NBThru	NBRight	NBUTurn	NBRTOR	SBLeft	SBThru	SBRight	SBUTurn	SBRTOR	EBLeft	EBThru	EBRight	EBUTurn	EBRTOR	WBLeft	WBThru	WBRight	WBUTurn	WBRTOR	Total
All Vehicles	40	864	60	8	0	32	2800	48	24	0	100	36	32	0	0	104	0	36	0	0	4184
Heavy Truc	0	12	0			0	4	0			0	0	0			0	0	4			20
Pedestrians		0					0					0					0				0
Bicycles	0	0	0			0	0	0			0	0	0			0	0	0			0

ALL-VEHICLE VOLUMES

Time Perio	NB Left	NB Thru	NB Right	NB U-Turn	NB RTOR	SB Left	SB Thru	SB Right	SB U-Turn	SB RTOR	EB Left	EB Thru	EB Right	EB U-Turn	EB RTOR	WB Left	WB Thru	WB Right	WB U-Turn	WB RTOR	Total	Hourly Tota
4:00 PM	1	59	2	0	0	6	79	2	1	0	4	1	3	0	0	3	0	4	0	0	165	
4:05 PM	2	54	2	0	0	4	100	0	1	0	4	0	3	0	0	4	0	12	0	0	186	
4:10 PM	1	55	3	0	0	2	99	1	0	0	3	0	3	0	0	3	0	3	0	0	173	
4:15 PM	2	56	6	0	0	2	127	4	2	0	1	2	6	0	0	2	0	6	0	0	216	
4:20 PM	2	50	3	0	0	3	84	4	0	0	6	3	3	0	0	4	0	6	0	0	168	
4:25 PM	2	73	4	0	0	5	128	2	1	0	4	1	1	0	0	5	0	8	0	0	234	
4:30 PM	4	64	4	0	0	5	119	1	1	0	3	1	3	0	0	3	0	7	0	0	215	
4:35 PM	4	49	2	0	0	2	138	2	0	0	6	2	4	0	0	6	0	1	0	0	216	
4:40 PM	0	65	4	0	0	3	124	3	0	0	4	0	4	0	0	3	0	9	0	0	219	
4:45 PM	0	57	1	0	0	4	145	6	1	0	10	3	5	0	0	9	0	4	0	0	245	
4:50 PM	1	64	2	1	0	2	155	2	1	0	1	3	2	0	0	3	0	4	0	0	241	
4:55 PM	3	55	3	1	0	3	154	1	1	0	3	1	1	0	0	6	0	7	0	0	239	2517
5:00 PM	2	58	4	3	0	4	166	4	0	0	3	3	4	0	0	8	0	8	0	0	267	2619
5:05 PM	0	65	3	0	0	7	163	2	0	0	7	0	5	0	0	7	0	7	0	0	266	2699
5:10 PM	4	60	2	2	0	3	188	2	1	0	2	0	4	0	0	11	0	6	0	0	285	2811
5:15 PM	1	72	7	0	0	6	160	3	1	0	4	2	4	0	0	10	0	9	0	0	279	2874
5:20 PM	5	65	2	2	0	4	170	5	2	0	4	0	6	0	0	7	0	5	0	0	277	2983
5:25 PM	4	68	3	0	0	1	199	1	2	0	6	1	4	0	0	3	0	6	0	0	298	3047
5:30 PM	2	48	3	0	0	1	188	3	1	0	10	1	6	0	0	10	0	7	0	0	280	3112
5:35 PM	6	81	5	1	0	4	225	2	5	0	7	2	3	0	0	6	0	3	0	0	350	3246
5:40 PM	4	61	4	1	0	4	191	5	1	0	10	2	3	0	0	13	0	2	0	0	301	3328
5:45 PM	0	74	6	0	0	0	284	5	0	0	8	5	2	0	0	7	0	4	0	0	395	3478
5:50 PM	2	50	6	0	0	3	196	5	0	0	5	1	3	0	0	1	0	2	0	0	274	3511
5:55 PM	2	67	2	0	0	6	216	6	2	0	7	1	2	0	0	3	0	6	0	0	320	3592

HEAVY-VEHICLE VOLUMES

Time Perio	NB Left	NB Thru	NB Right	SB Left	SB Thru	SB Right	EB Left	EB Thru	EB Right	WB Left	WB Thru	WB Right	Total
4:00 PM	0	1	1	1	0	0	0	0	0	0	0	0	3
4:05 PM	0	2	0	0	3	0	0	0	0	0	0	0	5
4:10 PM	0	1	0	0	1	0	0	0	0	0	0	0	2
4:15 PM	0	1	0	0	1	0	0	0	0	0	0	0	2
4:20 PM	0	1	0	0	1	0	0	0	0	1	0	1	4
4:25 PM	0	4	0	0	0	1	0	0	0	0	0	0	5
4:30 PM	0	2	0	0	0	0	0	0	0	0	0	0	2
4:35 PM	0	1	0	1	1	0	0	0	0	0	0	0	3
4:40 PM	0	3	0	0	1	0	0	0	0	0	0	0	4
4:45 PM	0	0	0	0	0	0	0	0	0	0	0	1	1
4:50 PM	0	0	0	0	1	0	0	0	0	0	0	1	2
4:55 PM	0	1	0	0	2	0	0	0	0	0	0	0	3
5:00 PM	0	3	0	0	1	0	0	0	0	0	0	0	4
5:05 PM	0	2	0	0	0	0	0	0	0	1	0	0	3
5:10 PM	0	2	0	0	1	0	0	0	0	0	0	0	3
5:15 PM	0	1	0	0	1	0	0	0	0	0	0	1	3
5:20 PM	0	1	0	0	1	0	0	0	0	0	0	0	2
5:25 PM	0	0	0	0	1	0	1	0	0	0	0	0	2
5:30 PM	0	0	0	0	0	0	0	0	0	0	0	0	0
5:35 PM	0	1	0	0	0	0	0	0	0	0	0	1	2
5:40 PM	0	2	0	0	0	0	0	0	0	0	0	0	2
5:45 PM	0	0	0	0	1	0	0	0	0	0	0	0	1
5:50 PM	0	1	0	0	1	0	0	0	0	0	0	0	2
5:55 PM	0	2	0	0	1	0	0	0	0	0	0	0	3

PEDESTRIAN VOLUMES

Time Perio	North	South	East	West	Total
4:00 PM	0	3	1	0	4
4:05 PM	0	1	0	0	1
4:10 PM	1	1	1	0	3
4:15 PM	0	0	2	0	2
4:20 PM	0	0	1	0	1
4:25 PM	1	0	0	1	2
4:30 PM	2	0	0	0	2
4:35 PM	0	0	1	0	1
4:40 PM	1	0	0	0	1
4:45 PM	1	0	0	0	1
4:50 PM	0	0	0	2	2
4:55 PM	1	0	0	0	1
5:00 PM	0	0	0	0	0
5:05 PM	1	0	1	0	2
5:10 PM	0	1	0	0	1

5:15 PM	0	0	0	0	0
5:20 PM	0	0	0	1	1
5:25 PM	2	1	0	0	3
5:30 PM	1	1	0	0	2
5:35 PM	0	0	0	0	0
5:40 PM	0	0	0	0	0
5:45 PM	0	0	0	0	0
5:50 PM	0	0	0	0	0
5:55 PM	0	0	0	0	0

BICYCLE VOLUMES

Time Perio	NB Left	NB Thru	NB Right	SB Left	SB Thru	SB Right	EB Left	EB Thru	EB Right	WB Left	WB Thru	WB Right	Total
4:00 PM	0	0	0	0	0	0	0	0	0	0	0	0	0
4:05 PM	0	0	0	0	0	0	0	0	0	0	0	0	0
4:10 PM	0	0	0	0	0	0	0	0	0	0	0	0	0
4:15 PM	0	0	0	0	0	0	0	0	0	0	0	0	0
4:20 PM	0	0	0	0	0	0	0	0	0	0	0	0	0
4:25 PM	0	0	0	0	0	0	0	0	0	0	0	0	0
4:30 PM	0	0	0	0	0	0	0	0	0	0	0	0	0
4:35 PM	0	0	0	0	0	0	0	0	0	0	0	0	0
4:40 PM	0	0	0	0	0	0	0	0	0	0	0	0	0
4:45 PM	0	0	0	0	0	0	0	0	0	0	0	0	0
4:50 PM	0	0	0	0	0	0	0	0	0	0	0	0	0
4:55 PM	0	0	0	0	0	0	0	0	0	0	0	0	0
5:00 PM	0	0	0	0	1	0	0	0	0	0	0	0	1
5:05 PM	0	0	0	0	0	0	0	1	0	0	0	0	1
5:10 PM	0	0	0	0	0	0	0	1	0	0	0	0	1
5:15 PM	0	0	0	0	0	0	0	0	0	0	0	0	0
5:20 PM	0	0	0	0	0	0	0	0	0	0	0	0	0
5:25 PM	0	0	0	0	0	0	0	0	0	0	0	0	0
5:30 PM	0	0	0	0	0	0	0	1	0	0	0	0	1
5:35 PM	0	0	0	0	0	0	0	0	0	0	0	0	0
5:40 PM	0	0	0	0	0	0	0	0	0	0	0	0	0
5:45 PM	0	0	0	0	0	0	0	0	0	0	0	0	0
5:50 PM	0	0	0	0	0	0	0	0	0	0	0	0	0
5:55 PM	0	0	0	0	0	0	0	0	0	0	0	0	0

als

QUALITY COUNTS REPORT
==========

Intersectio S Mathilda W Washington Ave
City/State: Sunnyvale CA
QCJobNo: 10849809
ClientID:
Date: ########
Comments:

PEAK HOUI 8:00 AM
PEAK HOUI 9:00 AM
PEAK 15-M 8:10 AM
PEAK 15-M 8:25 AM
PHF 0.93

Lane Configuration:

	SIGNAL	SBLane1	SBLane2	SBLane3	SBLane4	SBLane5	SBLane6	SBLane7				
		TR	T	T	L	L						SIGNAL
EBLane7											TR	WBLane1
EBLane6											L	WBLane2
EBLane5											L	WBLane3
EBLane4												WBLane4
EBLane3	L											WBLane5
EBLane2	L											WBLane6
EBLane1	TR											WBLane7
SIGNAL					L	T	T	TR				
		NBLane7	NBLane6	NBLane5	NBLane4	NBLane3	NBLane2	NBLane1	SIGNAL			

PEAK-HOUR VOLUMES

NBLeft	NBThru	NBRight	SBLeft	SBThru	SBRight	EBLeft	EBThru	EBRight	WBLeft	WBThru	WBRight	NBEntering	SBEntering	EBEntering	WBEnterin	NBLeaving	SBLeaving	EBLeaving	WBLeaving
35	2171	26	173	862	97	168	34	22	10	33	64	2232	1132	224	107	2469	898	167	161

PERCENT HEAVY VEHICLES

NBLeft	NBThru	NBRight	SBLeft	SBThru	SBRight	EBLeft	EBThru	EBRight	WBLeft	WBThru	WBRight	NBEntering	SBEntering	EBEntering	WBEnterin	NBLeaving	SBLeaving	EBLeaving	WBLeaving
2.9	0.6	30.8	9.8	3.5	3.1	0	2.9	0	30	3	21.9	1	4.4	0.4	16.8	1.1	3.7	15.6	3.1

PEAK-HOUR VOLUMES - PEDESTRIANS

North	South	East	West
5	8	5	4

PEAK-HOUR VOLUMES - BICYCLES

NBLeft	NBThru	NBRight	SBLeft	SBThru	SBRight	EBLeft	EBThru	EBRight	WBLeft	WBThru	WBRight
2	2	0	0	0	1	0	0	0	0	0	0

PEAK 15-MIN FLOWRATES

VehicleTyp	NBLeft	NBThru	NBRight	NBUTurn	NBRTOR	SBLeft	SBThru	SBRight	SBUTurn	SBRTOR	EBLeft	EBThru	EBRight	EBUTurn	EBRTOR	WBLeft	WBThru	WBRight	WBUTurn	WBRTOR	Total
All Vehicles	44	2328	36	0	0	112	924	132	60	0	180	28	32	0	0	16	24	64	0	0	3980
Heavy Truc	4	8	8			8	36	4			0	0	0			4	0	0			72
Pedestrians		8					0					4					4				16
Bicycles	0	0	0			0	0	0			0	0	0			0	0	0			0

ALL-VEHICLE VOLUMES

Time Perio	NB Left	NB Thru	NB Right	NB U-Turn	NB RTOR	SB Left	SB Thru	SB Right	SB U-Turn	SB RTOR	EB Left	EB Thru	EB Right	EB U-Turn	EB RTOR	WB Left	WB Thru	WB Right	WB U-Turn	WB RTOR	Total	Hourly Tota
7:00 AM	0	52	8	0	0	7	31	5	0	0	6	1	2	0	0	1	0	4	0	0	117	
7:05 AM	0	58	3	0	0	5	22	6	2	0	7	1	0	0	0	3	0	5	0	0	112	
7:10 AM	1	58	1	0	0	12	48	1	1	0	6	1	0	0	0	0	1	8	0	0	138	
7:15 AM	0	71	2	1	0	11	30	6	5	0	8	3	0	0	0	2	1	2	0	0	142	
7:20 AM	0	53	2	0	0	5	36	2	2	0	11	3	1	0	0	1	1	3	0	0	120	
7:25 AM	25	50	1	0	0	7	57	6	3	0	6	0	1	0	0	1	0	5	0	0	162	
7:30 AM	1	81	2	1	0	4	38	10	2	0	12	1	2	0	0	0	0	1	0	0	155	
7:35 AM	3	71	0	0	0	7	64	6	3	0	15	1	0	0	0	1	1	4	0	0	176	
7:40 AM	1	97	3	0	0	9	51	7	2	0	16	1	2	0	0	1	0	7	0	0	197	
7:45 AM	0	166	2	0	0	9	88	27	3	0	10	1	1	0	0	0	1	5	0	0	313	
7:50 AM	2	125	0	0	0	8	74	16	4	0	9	5	1	0	0	1	1	4	0	0	250	
7:55 AM	2	173	5	0	0	5	88	21	2	0	14	2	3	0	0	2	4	2	0	0	323	2205
8:00 AM	4	141	1	0	0	7	57	9	5	0	11	6	4	0	0	0	0	5	0	0	250	2338
8:05 AM	2	119	1	0	0	6	68	19	2	0	11	4	0	0	0	2	0	3	0	0	237	2463
8:10 AM	3	196	4	0	0	8	100	12	3	0	10	1	4	0	0	1	1	4	0	0	347	2672
8:15 AM	7	192	3	0	0	10	56	8	10	0	18	3	1	0	0	1	3	3	0	0	315	2845
8:20 AM	1	194	2	0	0	10	75	13	2	0	17	3	3	0	0	2	2	9	0	0	333	3058
8:25 AM	0	210	2	3	0	7	50	3	6	0	19	3	4	0	0	0	9	5	0	0	321	3217
8:30 AM	1	191	2	0	0	10	64	5	2	0	14	2	1	0	0	2	1	3	0	0	298	3360
8:35 AM	2	187	3	0	0	10	81	3	5	0	9	1	0	0	0	0	2	9	0	0	312	3496
8:40 AM	1	174	3	0	0	11	71	2	7	0	16	6	1	0	0	1	4	4	0	0	301	3600
8:45 AM	2	198	0	0	0	8	68	6	8	0	13	2	2	0	0	0	2	5	0	0	314	3601
8:50 AM	3	184	4	0	0	14	90	8	7	0	17	3	2	0	0	0	4	5	0	0	341	3692
8:55 AM	5	185	1	1	0	6	82	9	9	0	13	0	0	0	0	1	5	9	0	0	326	3695

HEAVY-VEHICLE VOLUMES

Time Perio	NB Left	NB Thru	NB Right	SB Left	SB Thru	SB Right	EB Left	EB Thru	EB Right	WB Left	WB Thru	WB Right	Total
7:00 AM	0	2	4	2	7	0	0	0	0	0	0	0	15
7:05 AM	0	0	1	0	0	0	0	0	0	0	0	1	2
7:10 AM	0	0	0	4	1	0	0	0	0	0	0	1	6
7:15 AM	0	2	1	0	3	2	0	0	0	1	0	2	11
7:20 AM	0	0	0	0	2	0	1	0	0	0	0	3	6
7:25 AM	0	0	1	5	2	0	0	0	0	0	0	2	10
7:30 AM	0	0	0	0	5	0	0	0	0	0	0	1	6
7:35 AM	0	1	0	2	1	0	1	1	0	0	0	2	8
7:40 AM	0	0	1	3	2	1	0	0	0	0	0	1	8
7:45 AM	0	4	1	1	4	0	0	0	0	0	0	0	10
7:50 AM	0	2	0	0	2	0	0	0	0	0	0	1	5
7:55 AM	0	0	1	0	1	1	0	0	0	0	0	0	3
8:00 AM	0	1	0	1	1	0	0	0	0	0	0	1	4
8:05 AM	0	1	0	0	2	0	0	0	0	1	0	1	5
8:10 AM	0	0	0	0	3	0	0	0	0	0	0	0	3
8:15 AM	1	0	1	1	2	0	0	0	0	0	0	0	5
8:20 AM	0	2	1	1	4	1	0	0	0	1	0	0	10
8:25 AM	0	0	0	1	4	1	0	0	0	0	1	0	7
8:30 AM	0	0	0	1	3	0	0	0	0	0	0	1	5
8:35 AM	0	1	2	2	1	0	0	0	0	0	0	1	7
8:40 AM	0	1	2	3	0	0	0	1	0	0	0	2	9
8:45 AM	0	1	0	2	1	0	0	0	0	0	0	1	5
8:50 AM	0	3	2	4	7	0	0	0	0	0	0	3	19
8:55 AM	0	3	0	1	2	1	0	0	0	1	0	4	12

PEDESTRIAN VOLUMES

Time Perio	North	South	East	West	Total
7:00 AM	1	0	0	0	1
7:05 AM	2	1	0	2	5
7:10 AM	0	0	0	0	0
7:15 AM	0	1	0	1	2
7:20 AM	0	1	2	0	3
7:25 AM	1	1	0	0	2
7:30 AM	0	0	0	0	0
7:35 AM	1	0	0	1	2
7:40 AM	2	2	0	0	4
7:45 AM	0	0	0	0	0
7:50 AM	0	0	1	0	1
7:55 AM	0	1	0	0	1
8:00 AM	0	0	0	0	0
8:05 AM	0	0	0	0	0
8:10 AM	0	0	0	0	0

8:15 AM	0	0	1	0	1
8:20 AM	0	2	0	1	3
8:25 AM	0	1	0	0	1
8:30 AM	0	0	0	1	1
8:35 AM	0	2	0	0	2
8:40 AM	4	2	0	0	6
8:45 AM	0	0	0	0	0
8:50 AM	1	0	4	1	6
8:55 AM	0	1	0	1	2

BICYCLE VOLUMES

Time Perio	NB Left	NB Thru	NB Right	SB Left	SB Thru	SB Right	EB Left	EB Thru	EB Right	WB Left	WB Thru	WB Right	Total
7:00 AM	0	0	0	0	0	0	0	0	0	0	0	0	0
7:05 AM	0	0	0	0	0	0	0	0	0	0	0	0	0
7:10 AM	0	0	0	0	0	0	0	0	0	0	0	0	0
7:15 AM	0	0	0	0	0	0	0	0	0	0	0	0	0
7:20 AM	0	0	0	0	0	0	0	0	0	0	1	0	1
7:25 AM	0	0	0	0	0	0	0	0	0	0	0	0	0
7:30 AM	0	0	0	0	0	0	0	0	0	0	0	0	0
7:35 AM	0	0	0	0	0	0	0	0	0	0	0	0	0
7:40 AM	0	1	0	0	0	0	0	0	0	0	0	0	1
7:45 AM	0	0	0	0	0	0	0	0	0	0	0	0	0
7:50 AM	0	0	0	0	0	0	0	0	0	0	0	0	0
7:55 AM	0	0	0	0	0	0	0	0	0	0	0	0	0
8:00 AM	0	1	0	0	0	0	0	0	0	0	0	0	1
8:05 AM	0	0	0	0	0	0	0	0	0	0	0	0	0
8:10 AM	0	0	0	0	0	0	0	0	0	0	0	0	0
8:15 AM	0	0	0	0	0	0	0	0	0	0	0	0	0
8:20 AM	0	0	0	0	0	0	0	0	0	0	0	0	0
8:25 AM	0	0	0	0	0	0	0	0	0	0	0	0	0
8:30 AM	0	1	0	0	0	1	0	0	0	0	0	0	2
8:35 AM	2	0	0	0	0	0	0	0	0	0	0	0	2
8:40 AM	0	0	0	0	0	0	0	0	0	0	0	0	0
8:45 AM	0	0	0	0	0	0	0	0	0	0	0	0	0
8:50 AM	0	0	0	0	0	0	0	0	0	0	0	0	0
8:55 AM	0	0	0	0	0	0	0	0	0	0	0	0	0

als

QUALITY COUNTS REPORT
==========

Intersection:	S Mathilda Ave	W Washington Ave
City/State:	Sunnyvale	CA
QCJobNo:	10849810	
ClientID:		
Date:	11/14/2012	
Comments:		
PEAK HOUR STA	5:00 PM	
PEAK HOUR END	6:00 PM	
PEAK 15-MIN ST	5:35 PM	
PEAK 15-MIN EN	5:50 PM	
PHF	0.88	

Lane Configuration:

	SIGNAL	SBLane1	SBLane2	SBLane3	SBLane4	SBLane5	SBLane6	SBLane7				
		TR	T	T	L	L						SIGNAL
EBLane7											TR	WBLane1
EBLane6											L	WBLane2
EBLane5											L	WBLane3
EBLane4												WBLane4
EBLane3	L											WBLane5
EBLane2	L											WBLane6
EBLane1	TR											WBLane7
SIGNAL					L	T	T	TR				
		NBLane7	NBLane6	NBLane5	NBLane4	NBLane3	NBLane2	NBLane1	SIGNAL			

PEAK-HOUR VOLUMES

NBLeft	NBThru	NBRight	SBLeft	SBThru	SBRight	EBLeft	EBThru	EBRight	WBLeft	WBThru	WBRight	NBEntering	SBEntering	EBEntering	WBEntering	NBLeaving	SBLeaving	EBLeaving	WBLeaving
42	851	61	222	2229	241	102	45	33	115	33	130	954	2692	180	278	1102	2385	309	308

PERCENT HEAVY VEHICLES

NBLeft	NBThru	NBRight	SBLeft	SBThru	SBRight	EBLeft	EBThru	EBRight	WBLeft	WBThru	WBRight	NBEntering	SBEntering	EBEntering	WBEntering	NBLeaving	SBLeaving	EBLeaving	WBLeaving
0	1.5	9.8	2.7	0.4	0.4	0	4.4	3	0.9	0	0.8	2	0.6	1.7	0.7	1.3	0.5	4.5	0.3

PEAK-HOUR VOLUMES - PEDESTRIANS

North	South	East	West
3	11	5	7

PEAK-HOUR VOLUMES - BICYCLES

NBLeft	NBThru	NBRight	SBLeft	SBThru	SBRight	EBLeft	EBThru	EBRight	WBLeft	WBThru	WBRight
0	1	0	0	0	0	0	1	0	0	0	0

PEAK 15-MIN FLOWRATES

VehicleType	NBLeft	NBThru	NBRight	NBUTurn	NBRTOR	SBLeft	SBThru	SBRight	SBUTurn	SBRTOR	EBLeft	EBThru	EBRight	EBUTurn	EBRTOR	WBLeft	WBThru	WBRight	WBUTurn	WBRTOR	Total
All Vehicles	36	976	60	8	0	220	2624	332	28	0	92	36	20	0	0	84	44	128	0	0	4688
Heavy Trucks	0	12	8			8	12	0			0	4	0			0	0	4			48
Pedestrians		0					4					0					8				12
Bicycles	0	0	0			0	0	0			0	0	0			0	0	0			0

ALL-VEHICLE VOLUMES

Time Period	NB Left	NB Thru	NB Right	NB U-Turn	NB RTOR	SB Left	SB Thru	SB Right	SB U-Turn	SB RTOR	EB Left	EB Thru	EB Right	EB U-Turn	EB RTOR	WB Left	WB Thru	WB Right	WB U-Turn	WB RTOR	Total	Hourly Totals
4:00 PM	1	65	3	1	0	5	77	4	1	0	5	3	2	0	0	4	2	4	0	0	177	
4:05 PM	1	75	3	0	0	7	106	7	1	0	1	2	1	0	0	4	4	10	0	0	222	
4:10 PM	3	55	1	0	0	7	88	4	0	0	6	4	5	0	0	4	3	7	0	0	187	
4:15 PM	1	65	3	3	0	9	124	3	1	0	7	8	4	0	0	4	2	11	0	0	245	
4:20 PM	1	64	3	0	0	11	93	3	2	0	2	4	0	0	0	5	4	12	0	0	204	
4:25 PM	3	71	2	1	0	4	124	13	0	0	7	6	6	0	0	6	5	8	0	0	256	
4:30 PM	5	66	5	1	0	13	113	9	1	0	6	1	0	0	0	7	2	7	0	0	236	
4:35 PM	2	59	1	0	0	17	130	12	0	0	8	6	3	0	0	3	4	8	0	0	253	
4:40 PM	2	65	7	0	0	16	126	10	1	0	8	2	2	0	0	7	3	7	0	0	256	
4:45 PM	2	73	5	0	0	12	152	12	1	0	6	3	1	0	0	5	1	6	0	0	279	
4:50 PM	0	67	4	0	0	14	157	12	3	0	9	8	4	0	0	6	3	8	0	0	295	
4:55 PM	1	63	2	1	0	17	153	16	3	0	14	4	4	0	0	4	2	12	0	0	296	2906
5:00 PM	3	70	3	1	0	19	173	12	0	0	12	3	2	0	0	2	3	14	0	0	317	3046
5:05 PM	8	70	4	2	0	13	154	11	3	0	7	2	2	0	0	13	1	8	0	0	298	3122
5:10 PM	1	76	3	0	0	18	174	14	0	0	10	2	2	0	0	13	0	7	0	0	320	3255
5:15 PM	3	77	4	0	0	12	149	9	1	0	8	1	5	0	0	7	2	14	0	0	292	3302
5:20 PM	2	54	10	1	0	13	187	16	1	0	11	7	5	0	0	16	4	11	0	0	338	3436
5:25 PM	2	74	6	0	0	21	169	26	3	0	9	3	1	0	0	12	4	13	0	0	343	3523
5:30 PM	1	58	6	2	0	17	189	32	1	0	10	4	5	0	0	9	2	12	0	0	348	3635
5:35 PM	3	78	5	1	0	13	190	23	1	0	11	3	2	0	0	9	6	15	0	0	360	3742
5:40 PM	5	75	4	0	0	22	200	37	4	0	7	2	1	0	0	8	3	9	0	0	377	3863
5:45 PM	1	91	6	1	0	20	266	23	2	0	5	4	2	0	0	4	2	8	0	0	435	4019
5:50 PM	3	53	5	0	0	19	179	18	1	0	8	7	3	0	0	11	5	7	0	0	319	4043
5:55 PM	2	75	5	0	0	16	199	20	2	0	4	7	3	0	0	11	1	12	0	0	357	4104

HEAVY-VEHICLE VOLUMES

Time Period	NB Left	NB Thru	NB Right	SB Left	SB Thru	SB Right	EB Left	EB Thru	EB Right	WB Left	WB Thru	WB Right	Total
4:00 PM	0	0	1	1	1	1	0	0	0	0	0	0	4
4:05 PM	0	1	0	0	2	0	0	0	0	1	0	2	6
4:10 PM	0	2	1	0	1	0	0	1	0	0	1	0	6
4:15 PM	0	1	1	1	0	0	0	0	0	0	0	1	4
4:20 PM	0	2	0	1	1	0	0	0	0	2	0	0	6
4:25 PM	0	3	0	0	2	0	0	0	0	0	0	1	6
4:30 PM	0	1	1	0	0	0	0	0	0	0	0	1	3
4:35 PM	0	0	0	0	2	0	0	0	0	0	0	0	2
4:40 PM	0	2	2	1	0	0	0	0	0	1	0	0	6
4:45 PM	0	2	0	1	1	0	0	0	0	0	0	0	4
4:50 PM	0	1	0	1	0	0	0	1	0	1	0	1	5
4:55 PM	0	1	0	1	2	0	0	0	0	0	0	0	4
5:00 PM	0	1	1	0	0	0	0	0	1	0	0	0	3
5:05 PM	0	2	0	1	0	1	0	0	0	0	0	0	4
5:10 PM	0	1	1	1	1	0	0	0	0	0	0	0	4
5:15 PM	0	3	0	1	2	0	0	0	0	0	0	0	6
5:20 PM	0	0	1	0	1	0	0	0	0	0	0	0	2
5:25 PM	0	1	0	0	0	0	0	1	0	1	0	0	3
5:30 PM	0	0	0	1	0	0	0	0	0	0	0	0	1
5:35 PM	0	1	1	0	0	0	0	0	0	0	0	0	2
5:40 PM	0	1	1	2	1	0	0	0	0	0	0	1	6
5:45 PM	0	1	0	0	2	0	0	1	0	0	0	0	4
5:50 PM	0	0	1	0	1	0	0	0	0	0	0	0	2
5:55 PM	0	2	0	0	1	0	0	0	0	0	0	0	3

PEDESTRIAN VOLUMES

Time Period	North	South	East	West	Total
4:00 PM	1	0	1	0	2
4:05 PM	0	0	0	0	0
4:10 PM	0	2	0	0	2
4:15 PM	0	2	2	0	4
4:20 PM	5	0	2	0	7
4:25 PM	1	1	1	0	3
4:30 PM	0	0	0	0	0
4:35 PM	1	1	2	0	4
4:40 PM	1	2	0	1	4
4:45 PM	1	0	2	0	3
4:50 PM	0	1	4	0	5
4:55 PM	0	6	0	0	6
5:00 PM	0	1	0	1	2
5:05 PM	0	5	0	2	7
5:10 PM	1	1	1	0	3
5:15 PM	0	1	0	1	2
5:20 PM	0	0	0	2	2
5:25 PM	0	0	0	0	0
5:30 PM	0	1	1	0	2
5:35 PM	0	0	0	0	0
5:40 PM	0	0	2	0	2
5:45 PM	1	0	0	0	1
5:50 PM	1	2	1	0	4
5:55 PM	0	0	0	1	1

BICYCLE VOLUMES

Time Period	NB Left	NB Thru	NB Right	SB Left	SB Thru	SB Right	EB Left	EB Thru	EB Right	WB Left	WB Thru	WB Right	Total
4:00 PM	0	1	0	0	0	0	0	0	0	0	0	0	1

4:05 PM	0	0	0	0	0	0	0	0	0	0	0	0	0
4:10 PM	0	0	0	0	0	0	0	0	0	0	0	0	0
4:15 PM	0	0	0	0	0	0	0	0	0	0	0	0	0
4:20 PM	0	0	0	0	0	0	0	0	0	0	0	0	0
4:25 PM	0	0	0	0	0	0	0	0	0	0	0	0	0
4:30 PM	0	0	0	0	0	0	0	1	0	0	0	0	1
4:35 PM	0	0	0	0	0	0	0	0	0	0	0	0	0
4:40 PM	0	0	0	0	0	0	0	0	0	0	0	0	0
4:45 PM	0	0	0	0	0	0	0	0	0	0	0	0	0
4:50 PM	0	0	0	0	0	0	0	0	0	0	1	0	1
4:55 PM	0	0	0	0	1	0	0	0	0	0	0	0	1
5:00 PM	0	0	0	0	0	0	0	1	0	0	0	0	1
5:05 PM	0	1	0	0	0	0	0	0	0	0	0	0	1
5:10 PM	0	0	0	0	0	0	0	0	0	0	0	0	0
5:15 PM	0	0	0	0	0	0	0	0	0	0	0	0	0
5:20 PM	0	0	0	0	0	0	0	0	0	0	0	0	0
5:25 PM	0	0	0	0	0	0	0	0	0	0	0	0	0
5:30 PM	0	0	0	0	0	0	0	0	0	0	0	0	0
5:35 PM	0	0	0	0	0	0	0	0	0	0	0	0	0
5:40 PM	0	0	0	0	0	0	0	0	0	0	0	0	0
5:45 PM	0	0	0	0	0	0	0	0	0	0	0	0	0
5:50 PM	0	0	0	0	0	0	0	0	0	0	0	0	0
5:55 PM	0	0	0	0	0	0	0	0	0	0	0	0	0

File Name: C:\A1 DATA 2011\FP SUNNYVALE 10-11\TURN COUNTs\3AM FINAL.ppd
Start Date: 10/13/2011
Start Time: 7:00:00 AM
Site Code: 00000003
Comment 1: Vehicles
Comment 2: 0
Comment 3: 0
Comment 4: 0

	CARIBBEAN DR Southbound				MOFFETT PARK DR Westbound				LAWRENCE EXPWY Northbound				MOFFETT PARK DR Eastbound			
Start Time	Right	Thru	Left	Peds	Right	Thru	Left	Peds	Right	Thru	Left	Peds	Right	Thru	Left	Peds
07:00 AM	0	16	0	3	2	2	4	0	4	183	46	0	18	7	8	1
07:15 AM	5	38	0	2	1	1	2	0	12	196	96	0	8	0	6	0
07:30 AM	0	33	0	2	0	2	0	0	6	279	117	2	12	2	5	0
07:45 AM	3	31	1	3	0	6	1	0	10	382	155	0	11	3	6	0
08:00 AM	2	33	0	0	1	3	5	0	4	338	123	0	16	1	2	0
08:15 AM	2	42	0	3	2	2	4	1	3	338	150	0	6	0	1	0
08:30 AM	4	50	0	1	1	4	1	0	6	352	166	0	11	2	3	0
08:45 AM	2	23	0	0	0	8	1	0	6	344	110	0	12	1	4	0

File Name: C:\A1 DATA 2011\FP SUNNYVALE 10-11\TURN COUNTs\3AM FINAL.ppd
Start Date: 10/13/2011
Start Time: 7:00:00 AM
Site Code: 00000003
Comment 1: Bikes
Comment 2: 0
Comment 3: 0
Comment 4: 0

	CARIBBEAN DR Southbound				MOFFETT PARK DR Westbound				LAWRENCE EXPWY Northbound				MOFFETT PARK DR Eastbound			
Start Time	Right	Thru	Left	Peds	Right	Thru	Left	Peds	Right	Thru	Left	Peds	Right	Thru	Left	Peds
07:00 AM	0	0	0	0	0	0	0	0	0	0	0	0	0	0	0	0
07:15 AM	0	0	0	0	0	0	0	0	0	0	0	0	0	0	0	0
07:30 AM	0	0	0	0	1	3	0	0	1	2	0	0	0	3	0	0
07:45 AM	0	0	0	0	1	3	0	0	1	0	0	0	0	0	0	0
08:00 AM	0	0	0	0	0	3	0	0	0	0	0	0	0	3	0	0
08:15 AM	0	0	1	0	1	2	0	0	0	0	0	0	0	3	2	0
08:30 AM	0	0	0	0	1	3	1	0	0	0	0	0	0	0	0	0
08:45 AM	0	0	0	0	0	2	0	0	0	0	0	0	0	4	1	0

File Name: C:\A1 DATA 2011\FP SUNNYVALE 10-11\TURN COUNTs\3PM FINAL.ppd
Start Date: 10/13/2011
Start Time: 4:00:00 PM
Site Code: 00000003
Comment 1: Vehicles
Comment 2: 0
Comment 3: 0
Comment 4: 0

	CARIBBEAN DR Southbound				MOFFETT PARK DR Westbound				LAWRENCE EXPWY Northbound				MOFFETT PARK DR Eastbound			
Start Time	Right	Thru	Left	Peds	Right	Thru	Left	Peds	Right	Thru	Left	Peds	Right	Thru	Left	Peds
04:00 PM	1	201	1	0	1	0	4	0	4	73	21	0	69	0	0	0
04:15 PM	0	214	1	0	1	1	2	0	4	86	19	0	77	0	1	0
04:30 PM	2	289	0	0	2	1	4	0	8	57	46	0	97	0	1	0
04:45 PM	1	247	2	1	2	1	3	0	7	97	43	0	95	2	0	2
05:00 PM	1	422	1	1	2	1	5	0	6	119	81	0	119	0	0	0
05:15 PM	1	330	2	0	1	2	0	1	5	88	112	0	108	0	2	0
05:30 PM	2	319	0	2	1	3	3	1	16	64	98	0	133	1	1	2
05:45 PM	2	279	4	0	2	1	2	0	12	87	70	0	93	1	2	0

File Name: C:\A1 DATA 2011\FP SUNNYVALE 10-11\TURN COUNTs\3PM FINAL.ppd
Start Date: 10/13/2011
Start Time: 4:00:00 PM
Site Code: 00000003
Comment 1: Bikes
Comment 2: 0
Comment 3: 0
Comment 4: 0

	CARIBBEAN DR Southbound				MOFFETT PARK DR Westbound				LAWRENCE EXPWY Northbound				MOFFETT PARK DR Eastbound			
Start Time	Right	Thru	Left	Peds	Right	Thru	Left	Peds	Right	Thru	Left	Peds	Right	Thru	Left	Peds
04:00 PM	0	0	1	0	0	0	0	0	0	0	0	0	0	6	0	0
04:15 PM	0	0	2	0	0	1	0	0	0	1	0	0	0	1	0	0
04:30 PM	0	0	0	0	0	0	0	0	0	0	0	0	0	1	0	0
04:45 PM	0	1	1	0	0	2	0	0	0	0	0	0	0	1	0	0
05:00 PM	0	0	0	0	0	1	0	0	0	0	0	0	0	3	0	0
05:15 PM	0	0	0	0	0	4	0	0	0	0	0	0	0	7	0	0
05:30 PM	0	0	4	0	0	5	0	0	0	0	0	0	0	3	0	0
05:45 PM	0	0	1	0	0	3	0	0	1	0	0	0	0	8	0	0

File Name: C:\A1 DATA 2011\FP SUNNYVALE 10-11\TURN COUNTs\2AM FINAL.ppd
Start Date: 10/12/2011
Start Time: 7:00:00 AM
Site Code: 00000002
Comment 1: Vehicles
Comment 2: 0
Comment 3: 0
Comment 4: 0

	Southbound				CARIBBEAN DR Westbound				CROSSMAN AVE Northbound				CARIBBEAN DR Eastbound			
Start Time	Right	Thru	Left	Peds	Right	Thru	Left	Peds	Right	Thru	Left	Peds	Right	Thru	Left	Peds
07:00 AM	0	0	0	0	0	161	56	0	3	0	2	0	2	13	0	0
07:15 AM	0	0	0	1	0	162	62	0	3	0	1	0	2	10	0	0
07:30 AM	0	0	0	1	0	229	70	0	6	0	2	0	5	15	2	0
07:45 AM	0	0	0	0	0	282	92	0	14	0	2	0	8	15	0	0
08:00 AM	0	0	0	0	0	258	114	0	13	0	3	0	10	23	0	0
08:15 AM	0	0	0	0	0	237	90	0	12	0	3	0	3	27	0	0
08:30 AM	0	0	0	0	0	250	113	0	8	0	2	0	9	17	0	0
08:45 AM	0	0	0	0	0	233	98	0	7	0	6	0	5	28	0	0

File Name: C:\A1 DATA 2011\FP SUNNYVALE 10-11\TURN COUNTs\2AM FINAL.ppd
Start Date: 10/12/2011
Start Time: 7:00:00 AM
Site Code: 00000002
Comment 1: Bikes
Comment 2: 0
Comment 3: 0
Comment 4: 0

	Southbound				CARIBBEAN DR Westbound				CROSSMAN AVE Northbound				CARIBBEAN DR Eastbound			
Start Time	Right	Thru	Left	Peds	Right	Thru	Left	Peds	Right	Thru	Left	Peds	Right	Thru	Left	Peds
07:00 AM	0	0	0	0	0	1	0	0	0	0	0	0	0	0	0	0
07:15 AM	0	0	0	0	0	3	0	0	0	0	0	0	1	1	0	0
07:30 AM	0	0	0	0	0	0	3	0	0	0	0	0	1	0	0	0
07:45 AM	0	0	0	0	0	2	1	0	0	0	0	0	0	0	0	0
08:00 AM	0	0	0	0	0	3	0	0	0	0	0	0	0	0	0	0
08:15 AM	0	0	0	0	0	3	1	0	0	0	0	0	0	0	0	0
08:30 AM	0	0	0	0	0	5	0	0	0	0	0	0	0	0	0	0
08:45 AM	0	0	0	0	0	0	0	0	0	0	0	0	0	0	0	0

File Name: C:\A1 DATA 2011\FP SUNNYVALE 10-11\TURN COUNTs\2PM FINAL.ppd
Start Date: 10/12/2011
Start Time: 4:00:00 PM
Site Code: 00000002
Comment 1: Vehicles
Comment 2: 0
Comment 3: 0
Comment 4: 0

	Southbound				CARIBBEAN DR Westbound				CROSSMAN AVE Northbound				CARIBBEAN DR Eastbound			
Start Time	Right	Thru	Left	Peds	Right	Thru	Left	Peds	Right	Thru	Left	Peds	Right	Thru	Left	Peds
04:00 PM	0	0	0	0	0	32	10	0	54	0	3	0	12	133	1	0
04:15 PM	0	0	0	1	0	30	6	1	64	0	3	0	13	143	0	0
04:30 PM	0	0	0	0	0	17	11	0	77	0	4	1	10	165	0	0
04:45 PM	0	0	0	0	0	27	6	0	77	0	0	1	10	171	2	0
05:00 PM	0	0	0	0	0	18	8	0	131	0	3	0	29	240	0	0
05:15 PM	0	0	0	0	0	25	12	0	119	0	3	0	23	219	1	0
05:30 PM	0	0	0	1	0	30	15	0	88	0	2	0	14	182	0	1
05:45 PM	0	0	0	0	0	23	9	1	70	0	2	1	14	188	0	0

File Name: C:\A1 DATA 2011\FP SUNNYVALE 10-11\TURN COUNTs\2PM FINAL.ppd
Start Date: 10/12/2011
Start Time: 4:00:00 PM
Site Code: 00000002
Comment 1: Bikes
Comment 2: 0
Comment 3: 0
Comment 4: 0

	Southbound				CARIBBEAN DR Westbound				CROSSMAN AVE Northbound				CARIBBEAN DR Eastbound			
Start Time	Right	Thru	Left	Peds	Right	Thru	Left	Peds	Right	Thru	Left	Peds	Right	Thru	Left	Peds
04:00 PM	0	0	0	0	0	0	0	0	0	0	0	0	0	3	0	0
04:15 PM	0	0	0	0	0	0	1	0	0	0	1	0	0	3	0	0
04:30 PM	0	0	0	0	0	3	0	0	0	0	0	0	0	1	0	0
04:45 PM	0	0	0	0	0	0	0	0	1	0	0	0	0	1	0	0
05:00 PM	0	0	0	0	0	1	0	0	0	0	0	0	1	2	0	0
05:15 PM	0	0	0	0	0	0	0	0	1	0	0	0	0	8	0	0
05:30 PM	0	0	0	0	0	1	0	0	1	0	0	0	0	0	0	0
05:45 PM	0	0	0	0	0	3	0	0	1	0	1	0	0	0	0	0

File Name: C:\A1 DATA 2011\FP SUNNYVALE 10-11\TURN COUNTs\10AM FINAL.ppd
Start Date: 10/13/2011
Start Time: 7:00:00 AM
Site Code: 00000010
Comment 1: Vehicles
Comment 2: 0
Comment 3: 0
Comment 4: 0

	FAIR OAKS AVE Southbound				FAIROAKS WY Westbound				FAIR OAKS AVE Northbound				FAIROAKS WY Eastbound			
Start Time	Right	Thru	Left	Peds	Right	Thru	Left	Peds	Right	Thru	Left	Peds	Right	Thru	Left	Peds
07:00 AM	1	12	0	0	0	1	2	1	0	121	7	0	9	0	31	0
07:15 AM	0	11	0	0	2	1	1	6	0	152	6	0	8	0	30	1
07:30 AM	0	12	0	0	0	2	3	0	1	179	8	0	16	0	37	0
07:45 AM	0	7	0	1	2	2	7	2	0	204	9	2	13	0	51	1
08:00 AM	2	11	0	0	1	0	4	1	3	259	8	0	11	1	48	1
08:15 AM	4	12	0	0	1	0	9	1	0	220	9	1	23	0	47	0
08:30 AM	2	19	1	0	1	0	6	3	2	262	10	0	18	0	44	0
08:45 AM	0	25	0	2	1	0	7	3	0	308	5	1	15	1	60	0

File Name: C:\A1 DATA 2011\FP SUNNYVALE 10-11\TURN COUNTs\10AM FINAL.ppd
Start Date: 10/13/2011
Start Time: 7:00:00 AM
Site Code: 00000010
Comment 1: Bikes
Comment 2: 0
Comment 3: 0
Comment 4: 0

	FAIR OAKS AVE Southbound				FAIROAKS WY Westbound				FAIR OAKS AVE Northbound				FAIROAKS WY Eastbound			
Start Time	Right	Thru	Left	Peds	Right	Thru	Left	Peds	Right	Thru	Left	Peds	Right	Thru	Left	Peds
07:00 AM	0	0	0	0	0	0	0	0	0	0	0	0	0	0	0	0
07:15 AM	0	0	0	0	0	0	0	0	0	1	0	0	0	0	0	0
07:30 AM	0	0	0	0	0	0	0	0	0	3	0	0	0	0	1	0
07:45 AM	0	0	0	0	0	0	0	0	0	1	0	0	0	0	0	0
08:00 AM	0	0	0	0	0	0	0	0	0	2	0	0	0	0	0	0
08:15 AM	0	0	0	0	0	0	0	0	0	1	0	0	0	0	0	0
08:30 AM	0	1	0	0	0	0	0	0	0	3	0	0	0	0	0	0
08:45 AM	0	0	0	0	0	0	0	0	0	3	0	0	0	0	0	0

File Name: C:\A1 DATA 2011\FP SUNNYVALE 10-11\TURN COUNTs\10PM FINAL.ppd
Start Date: 10/13/2011
Start Time: 4:00:00 PM
Site Code: 00000010
Comment 1: Vehicles
Comment 2: 0
Comment 3: 0
Comment 4: 0

	FAIR OAKS AVE Southbound				FAIROAKS WY Westbound				FAIR OAKS AVE Northbound				FAIROAKS WY Eastbound			
Start Time	Right	Thru	Left	Peds	Right	Thru	Left	Peds	Right	Thru	Left	Peds	Right	Thru	Left	Peds
04:00 PM	5	156	2	1	0	0	1	3	2	32	11	0	21	0	16	0
04:15 PM	6	136	1	1	0	0	7	0	4	22	14	0	38	0	11	1
04:30 PM	13	161	0	0	0	0	5	0	8	27	12	1	39	2	8	0
04:45 PM	6	196	2	0	0	0	5	0	3	20	5	1	41	1	7	0
05:00 PM	7	254	0	0	0	0	3	0	2	33	6	0	63	0	10	0
05:15 PM	9	295	2	1	1	1	6	1	1	32	17	0	68	0	11	0
05:30 PM	9	301	4	1	0	1	7	2	4	35	20	2	83	3	6	1
05:45 PM	10	213	1	0	0	0	5	2	5	40	13	1	83	2	13	0

File Name: C:\A1 DATA 2011\FP SUNNYVALE 10-11\TURN COUNTs\10PM FINAL.ppd
Start Date: 10/13/2011
Start Time: 4:00:00 PM
Site Code: 00000010
Comment 1: Bikes
Comment 2: 0
Comment 3: 0
Comment 4: 0

	FAIR OAKS AVE Southbound				FAIROAKS WY Westbound				FAIR OAKS AVE Northbound				FAIROAKS WY Eastbound			
Start Time	Right	Thru	Left	Peds	Right	Thru	Left	Peds	Right	Thru	Left	Peds	Right	Thru	Left	Peds
04:00 PM	0	0	0	0	0	0	0	0	0	0	0	0	0	0	0	0
04:15 PM	0	1	0	0	0	0	0	0	0	0	0	0	0	0	0	0
04:30 PM	0	1	0	0	0	0	0	0	0	0	0	0	0	0	0	0
04:45 PM	0	0	0	0	0	0	0	0	0	0	0	0	0	0	0	0
05:00 PM	0	1	0	0	0	0	0	0	0	0	0	0	0	0	0	0
05:15 PM	0	0	0	0	0	0	0	0	0	0	0	0	0	0	0	0
05:30 PM	0	3	0	0	0	0	0	0	0	0	0	0	0	0	0	0
05:45 PM	0	0	0	0	0	0	2	0	0	0	0	0	0	0	0	0

File Name: C:\A1 DATA 2011\FP SUNNYVALE 10-11\TURN COUNTs\5am final.ppd
Start Date: 10/12/2011
Start Time: 7:00:00 AM
Site Code: 00000005
Comment 1: Vehicles
Comment 2: 0
Comment 3: 0
Comment 4: 0

	LAWRENCE EXPWY Southbound				US-101 NB RAMPS Westbound				LAWRENCE EXPWY Northbound				Eastbound			
Start Time	Right	Thru	Left	Peds	Right	Thru	Left	Peds	Right	Thru	Left	Peds	Right	Thru	Left	Peds
07:00 AM	76	219	0	0	89	0	116	1	100	222	0	0	0	0	0	0
07:15 AM	94	284	0	0	81	0	119	0	163	327	0	0	0	0	0	0
07:30 AM	110	354	0	0	102	0	222	0	126	377	0	0	0	0	0	0
07:45 AM	101	366	0	0	121	0	224	0	149	574	0	0	0	0	0	0
08:00 AM	141	428	0	0	97	0	197	0	142	553	0	0	0	0	0	0
08:15 AM	77	408	0	0	97	0	188	1	161	551	0	0	0	0	0	0
08:30 AM	75	390	0	0	82	0	236	0	143	550	0	0	0	0	0	1
08:45 AM	97	379	0	0	93	0	202	0	145	541	0	0	0	0	0	0

File Name: C:\A1 DATA 2011\FP SUNNYVALE 10-11\TURN COUNTs\5am final.ppd
Start Date: 10/12/2011
Start Time: 7:00:00 AM
Site Code: 00000005
Comment 1: Bikes
Comment 2: 0
Comment 3: 0
Comment 4: 0

	LAWRENCE EXPWY Southbound				US-101 NB RAMPS Westbound				LAWRENCE EXPWY Northbound				Eastbound			
Start Time	Right	Thru	Left	Peds	Right	Thru	Left	Peds	Right	Thru	Left	Peds	Right	Thru	Left	Peds
07:00 AM	0	0	0	0	0	0	0	0	0	0	0	0	0	0	0	0
07:15 AM	0	0	0	0	0	0	0	0	0	0	0	0	0	0	0	0
07:30 AM	0	0	0	0	0	0	0	0	0	1	0	0	0	0	0	0
07:45 AM	0	0	0	0	0	0	0	0	0	2	0	0	0	0	0	0
08:00 AM	0	0	0	0	0	0	0	0	0	1	0	0	0	0	0	0
08:15 AM	0	1	0	0	0	0	0	0	0	0	0	0	0	0	0	0
08:30 AM	0	1	0	0	0	0	0	0	0	0	0	0	0	0	0	0
08:45 AM	0	0	0	0	0	0	0	0	0	3	0	0	0	0	0	0

File Name: C:\A1 DATA 2011\FP SUNNYVALE 10-11\TURN COUNTs\5PM FINAL.ppd
Start Date: 10/12/2011
Start Time: 4:00:00 PM
Site Code: 00000005
Comment 1: Vehicles
Comment 2: 0
Comment 3: 0
Comment 4: 0

	LAWRENCE EXPWY Southbound				US-101 NB RAMPS Westbound				LAWRENCE EXPWY Northbound				Eastbound			
Start Time	Right	Thru	Left	Peds	Right	Thru	Left	Peds	Right	Thru	Left	Peds	Right	Thru	Left	Peds
04:00 PM	41	383	0	0	81	0	148	0	96	332	0	0	0	0	0	0
04:15 PM	54	429	0	0	97	0	136	0	118	395	0	0	0	0	0	1
04:30 PM	52	494	0	0	69	0	148	0	101	406	0	0	0	0	0	0
04:45 PM	47	469	0	0	92	0	166	0	85	307	0	0	0	0	0	0
05:00 PM	36	525	0	0	100	0	215	0	92	457	0	0	0	0	0	0
05:15 PM	59	629	0	0	104	0	212	0	124	511	0	0	0	0	0	0
05:30 PM	58	599	0	0	103	0	281	0	102	495	0	0	0	0	0	1
05:45 PM	76	563	0	0	115	0	258	1	107	438	0	0	0	0	0	0

File Name: C:\A1 DATA 2011\FP SUNNYVALE 10-11\TURN COUNTs\5PM FINAL.ppd
Start Date: 10/12/2011
Start Time: 4:00:00 PM
Site Code: 00000005
Comment 1: Bikes
Comment 2: 0
Comment 3: 0
Comment 4: 0

	LAWRENCE EXPWY Southbound				US-101 NB RAMPS Westbound				LAWRENCE EXPWY Northbound				Eastbound			
Start Time	Right	Thru	Left	Peds	Right	Thru	Left	Peds	Right	Thru	Left	Peds	Right	Thru	Left	Peds
04:00 PM	0	1	0	0	0	0	0	0	0	1	0	0	0	0	0	0
04:15 PM	0	1	0	0	0	0	0	0	0	1	0	0	0	0	0	0
04:30 PM	0	0	0	0	0	0	0	0	0	0	0	0	0	0	0	0
04:45 PM	0	0	0	0	0	0	0	0	0	2	0	0	0	0	0	0
05:00 PM	0	2	0	0	0	0	0	0	0	0	0	0	0	0	0	0
05:15 PM	0	3	0	0	0	0	0	0	0	0	0	0	0	0	0	0
05:30 PM	0	1	0	0	0	0	0	0	0	1	0	0	0	0	0	0
05:45 PM	0	0	0	0	0	0	0	0	0	0	0	0	0	0	0	0

File Name: C:\A1 DATA 2011\FP SUNNYVALE 10-11\TURN COUNTs\4AM FINAL.ppd
Start Date: 10/12/2011
Start Time: 7:00:00 AM
Site Code: 00000004
Comment 1: Vehicles
Comment 2: 0
Comment 3: 0
Comment 4: 0

	LAWRENCE EXPWY Southbound				TASMAN DR Westbound				LAWRENCE EXPWY Northbound				TASMAN DR Eastbound			
Start Time	Right	Thru	Left	Peds	Right	Thru	Left	Peds	Right	Thru	Left	Peds	Right	Thru	Left	Peds
07:00 AM	10	83	19	1	17	31	42	0	90	312	4	0	26	24	58	0
07:15 AM	2	113	25	0	12	21	47	0	96	405	18	4	38	34	51	0
07:30 AM	1	215	11	1	22	24	56	0	107	419	27	1	93	28	102	0
07:45 AM	0	235	13	2	24	34	43	0	92	388	23	1	129	43	109	2
08:00 AM	4	230	13	0	23	23	51	1	110	420	34	0	60	59	96	0
08:15 AM	0	222	24	2	26	40	71	0	114	408	23	0	88	53	75	1
08:30 AM	7	216	16	0	31	27	81	0	99	420	30	0	59	44	94	0
08:45 AM	1	207	27	0	27	37	67	0	68	378	27	0	35	50	76	0

File Name: C:\A1 DATA 2011\FP SUNNYVALE 10-11\TURN COUNTs\4AM FINAL.ppd
Start Date: 10/12/2011
Start Time: 7:00:00 AM
Site Code: 00000004
Comment 1: Bikes
Comment 2: 0
Comment 3: 0
Comment 4: 0

	LAWRENCE EXPWY Southbound				TASMAN DR Westbound				LAWRENCE EXPWY Northbound				TASMAN DR Eastbound			
Start Time	Right	Thru	Left	Peds	Right	Thru	Left	Peds	Right	Thru	Left	Peds	Right	Thru	Left	Peds
07:00 AM	0	0	0	0	0	0	0	0	0	0	0	0	0	0	0	0
07:15 AM	0	0	0	0	0	0	0	0	0	0	0	0	0	0	0	0
07:30 AM	0	0	0	0	0	1	0	0	0	2	2	0	0	3	1	0
07:45 AM	0	1	0	0	0	0	0	0	0	0	0	0	1	0	0	0
08:00 AM	0	0	0	0	0	1	0	0	0	0	0	0	0	3	0	0
08:15 AM	0	2	0	0	0	1	0	0	0	0	0	0	1	0	0	0
08:30 AM	0	0	0	0	0	0	0	0	0	0	0	0	0	0	0	0
08:45 AM	0	0	0	0	0	0	0	0	0	1	0	0	0	0	0	0

File Name: C:\A1 DATA 2011\FP SUNNYVALE 10-11\TURN COUNTs\4PM FINAL.ppd
Start Date: 10/12/2011
Start Time: 4:00:00 PM
Site Code: 00000004
Comment 1: Vehicles
Comment 2: 0
Comment 3: 0
Comment 4: 0

	LAWRENCE EXPWY Southbound				TASMAN DR Westbound				LAWRENCE EXPWY Northbound				TASMAN DR Eastbound			
Start Time	Right	Thru	Left	Peds	Right	Thru	Left	Peds	Right	Thru	Left	Peds	Right	Thru	Left	Peds
04:00 PM	42	254	52	2	19	29	67	0	69	215	54	0	50	36	74	0
04:15 PM	51	289	38	2	16	35	89	2	60	211	61	1	32	25	37	0
04:30 PM	59	210	47	9	14	20	124	0	66	171	40	0	40	39	39	0
04:45 PM	80	315	66	1	26	46	104	5	66	208	51	1	45	86	51	1
05:00 PM	94	446	56	7	17	52	129	6	69	253	37	1	36	62	50	1
05:15 PM	110	410	84	4	20	62	174	2	89	250	60	1	79	88	38	0
05:30 PM	87	372	98	0	10	69	151	2	83	246	83	2	74	89	87	0
05:45 PM	95	362	113	15	22	69	146	1	81	210	83	0	81	96	100	5

File Name: C:\A1 DATA 2011\FP SUNNYVALE 10-11\TURN COUNTs\4PM FINAL.ppd
Start Date: 10/12/2011
Start Time: 4:00:00 PM
Site Code: 00000004
Comment 1: Bikes
Comment 2: 0
Comment 3: 0
Comment 4: 0

	LAWRENCE EXPWY Southbound				TASMAN DR Westbound				LAWRENCE EXPWY Northbound				TASMAN DR Eastbound			
Start Time	Right	Thru	Left	Peds	Right	Thru	Left	Peds	Right	Thru	Left	Peds	Right	Thru	Left	Peds
04:00 PM	0	1	0	0	0	0	0	0	0	0	0	0	0	0	0	0
04:15 PM	0	6	0	0	0	1	0	0	1	0	0	0	0	1	0	0
04:30 PM	0	0	0	0	0	2	0	0	0	0	0	0	0	0	0	0
04:45 PM	0	0	0	0	0	1	0	0	0	0	0	0	0	2	0	0
05:00 PM	0	0	0	0	0	1	0	0	0	0	0	0	0	0	1	0
05:15 PM	2	4	0	0	0	4	0	0	0	0	0	0	0	1	0	0
05:30 PM	0	1	0	0	0	2	0	0	0	0	0	0	0	0	0	0
05:45 PM	0	1	0	0	0	2	0	0	0	0	0	0	0	4	0	0

File Name: C:\A1 DATA 2011\FP SUNNYVALE 10-11\TURN COUNTs\7AM FINAL.ppd
Start Date: 10/12/2011
Start Time: 7:00:00 AM
Site Code: 00000007
Comment 1: Vehicles
Comment 2: 0
Comment 3: 0
Comment 4: 0

	CROSSMAN DR Southbound				MOFFETT PARK DR Westbound				Northbound				MOFFETT PARK DR Eastbound			
Start Time	Right	Thru	Left	Peds	Right	Thru	Left	Peds	Right	Thru	Left	Peds	Right	Thru	Left	Peds
07:00 AM	4	16	2	0	4	11	1	0	0	0	0	0	1	15	2	0
07:15 AM	12	23	1	0	4	29	2	0	0	0	0	0	0	12	5	0
07:30 AM	14	30	6	0	3	30	2	0	0	0	0	0	2	20	7	0
07:45 AM	23	13	6	0	5	32	0	0	0	0	0	0	1	31	5	0
08:00 AM	14	25	2	0	5	29	2	0	0	0	0	0	0	25	10	0
08:15 AM	16	21	8	1	6	33	3	0	0	0	0	0	0	23	17	0
08:30 AM	18	29	6	0	3	35	5	0	0	0	0	0	0	22	3	0
08:45 AM	23	24	9	0	5	39	3	0	0	0	0	0	2	28	14	0

File Name: C:\A1 DATA 2011\FP SUNNYVALE 10-11\TURN COUNTs\7AM FINAL.ppd
Start Date: 10/12/2011
Start Time: 7:00:00 AM
Site Code: 00000007
Comment 1: Bikes
Comment 2: 0
Comment 3: 0
Comment 4: 0

	CROSSMAN DR Southbound				MOFFETT PARK DR Westbound				Northbound				MOFFETT PARK DR Eastbound			
Start Time	Right	Thru	Left	Peds	Right	Thru	Left	Peds	Right	Thru	Left	Peds	Right	Thru	Left	Peds
07:00 AM	0	0	0	0	0	0	0	0	0	0	0	0	0	3	0	0
07:15 AM	0	0	0	0	0	0	0	0	0	0	0	0	0	1	0	0
07:30 AM	0	0	0	0	0	2	0	0	0	0	0	0	0	0	0	0
07:45 AM	0	0	0	0	0	4	0	0	0	0	0	0	0	2	0	0
08:00 AM	0	0	0	0	0	1	0	0	0	0	0	0	0	3	0	0
08:15 AM	0	0	0	0	0	3	0	0	0	0	0	0	0	13	1	0
08:30 AM	1	0	0	0	0	2	0	0	0	0	0	0	0	3	1	0
08:45 AM	0	0	0	0	0	1	0	0	0	0	0	0	0	5	0	0

File Name: C:\A1 DATA 2011\FP SUNNYVALE 10-11\TURN COUNTs\7PM FINAL.ppd
Start Date: 10/12/2011
Start Time: 4:00:00 PM
Site Code: 00000007
Comment 1: Vehicles
Comment 2: 0
Comment 3: 0
Comment 4: 0

	CROSSMAN AVE Southbound				MOFFETT PARK DR Westbound				Northbound				MOFFETT PARK DR Eastbound			
Start Time	Right	Thru	Left	Peds	Right	Thru	Left	Peds	Right	Thru	Left	Peds	Right	Thru	Left	Peds
04:00 PM	5	35	5	2	5	9	15	0	0	0	0	0	7	15	16	0
04:15 PM	5	40	3	0	9	9	9	0	0	0	0	0	7	16	15	0
04:30 PM	9	46	2	0	18	11	26	0	0	0	0	0	10	25	15	0
04:45 PM	7	64	3	0	6	10	23	0	0	0	0	0	9	32	13	0
05:00 PM	3	80	2	0	15	17	24	0	0	0	0	0	19	37	22	0
05:15 PM	8	73	5	2	18	11	24	0	0	0	0	0	15	49	26	0
05:30 PM	7	79	9	0	24	13	23	0	0	0	0	0	6	40	41	0
05:45 PM	16	53	4	0	17	26	14	1	0	0	0	0	8	39	26	0

File Name: C:\A1 DATA 2011\FP SUNNYVALE 10-11\TURN COUNTs\7PM FINAL.ppd
Start Date: 10/12/2011
Start Time: 4:00:00 PM
Site Code: 00000007
Comment 1: Bikes
Comment 2: 0
Comment 3: 0
Comment 4: 0

	CROSSMAN AVE Southbound				MOFFETT PARK DR Westbound				Northbound				MOFFETT PARK DR Eastbound			
Start Time	Right	Thru	Left	Peds	Right	Thru	Left	Peds	Right	Thru	Left	Peds	Right	Thru	Left	Peds
04:00 PM	0	0	0	0	0	1	0	0	0	0	0	0	0	0	0	0
04:15 PM	0	0	0	0	0	0	0	0	0	0	0	0	0	3	0	0
04:30 PM	0	0	2	0	0	2	0	0	0	0	0	0	0	1	0	0
04:45 PM	0	0	0	0	0	0	0	0	0	0	0	0	0	2	0	0
05:00 PM	1	0	0	0	0	2	0	0	0	0	0	0	0	1	0	0
05:15 PM	0	0	0	0	0	6	0	0	0	0	0	0	0	7	1	0
05:30 PM	1	0	0	0	0	5	0	0	0	0	0	0	0	4	0	0
05:45 PM	0	0	0	0	0	3	0	0	0	0	0	0	0	1	0	0

2012 CMP

		NBL	NBT	NBR	SBL	SBT	SBR	EBL	EBT	EBR	WBL	WBT	WBR
Lawrence Expwy	Tasman Dr	241	881	325	258	1591	244	122	248	211	597	312	85
Lawrence Expwy	Arques Av	178	1678	158	190	2941	144	263	305	590	340	217	107
Lawrence Expwy	Reed Av	161	1581	173	242	3978	388	223	310	388	208	199	175
Lawrence Expwy	Homestead Rd	132	1713	400	240	3399	374	381	605	262	353	459	179
Central Expressway	Mary Av	228	155	380	349	398	150	95	2115	882	668	1285	58

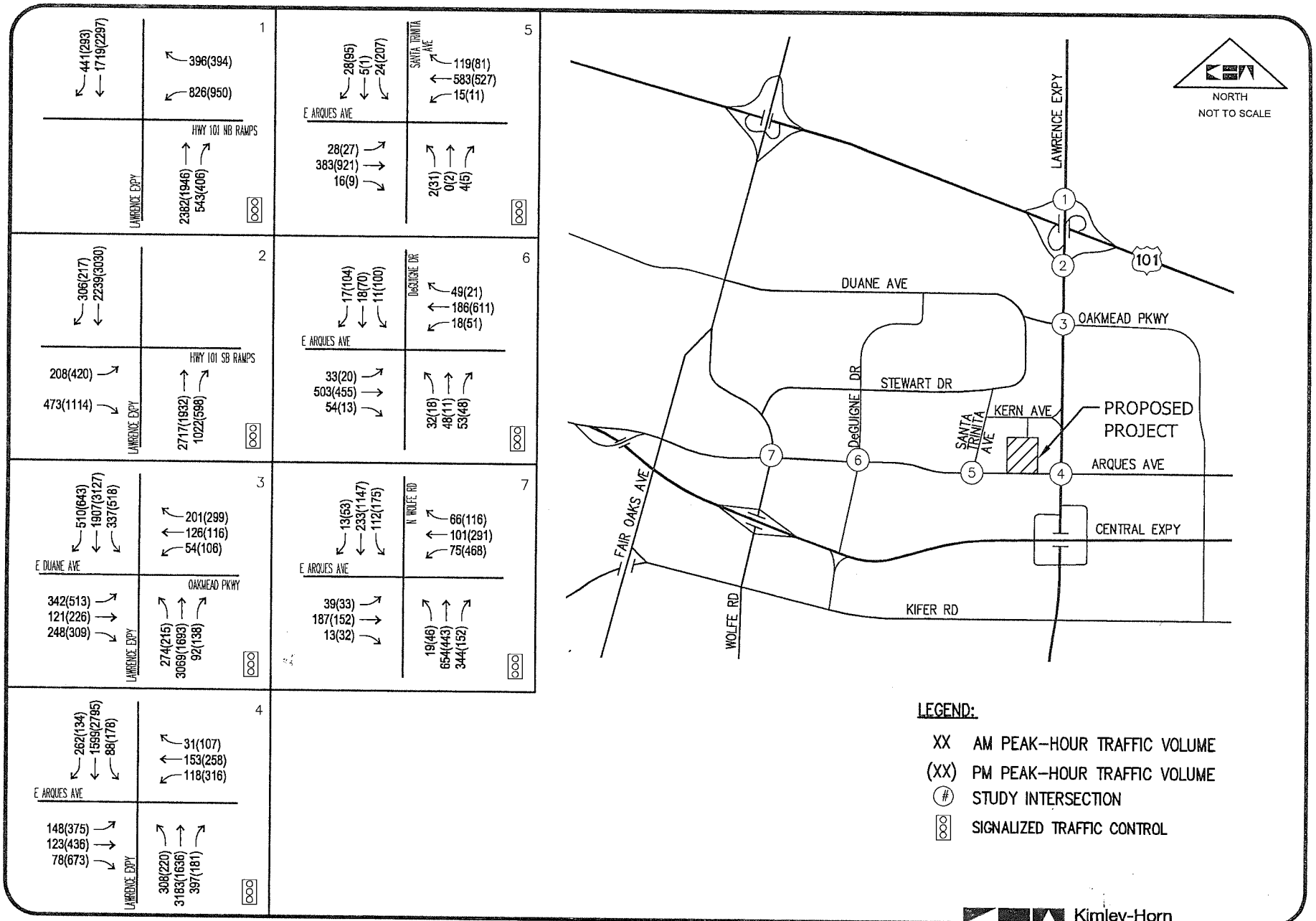

Kimley-Horn and Associates, Inc.

FIGURE 6

EXISTING (2012) PEAK-HOUR TRAFFIC VOLUMES

1165 EAST ARQUES AVENUE ATHLETIC CLUB

SUNNYVALE, CA

Table 3 – Existing (2012) Intersection Levels of Service

#	Intersection	Traffic Control	AM Peak-Hour		PM Peak-Hour	
			Delay (seconds)	LOS	Delay (seconds)	LOS
1	Lawrence Expressway @ US-101 NB Ramps	Signal	18.4	B	19.9	B
2	Lawrence Expressway @ US-101 SB Ramps	Signal	14.6	B	29.9	C
3	Lawrence Expressway @ East Duane Avenue	Signal	35.8	D	50.8	D
4	Lawrence Expressway @ East Arques Avenue	Signal	19.0	B	32.9	C
5	East Arques Avenue @ Santa Trinita Avenue	Signal	8.5	A	19.4	B
6	East Arques Avenue @ Deguigne Drive	Signal	19.7	B	26.1	C
7	East Arques Avenue @ North Wolfe Road	Signal	25.3	C	31.3	C
Bold = Substandard						

Table 4 – Existing (2012) and Existing (2012) plus Proposed Project Intersection Levels of Service

#	Intersection	Analysis Scenario[+]	Traffic Control	AM Peak-Hour		PM Peak-Hour	
				Delay (sec)	LOS	Delay (sec)	LOS
1	Lawrence Expressway @ US-101 NB Ramps	Exist.	Signal	18.4	B	19.9	B
		Exist.+PP		18.4	B	19.9	B
2	Lawrence Expressway @ US-101 SB Ramps	Exist.	Signal	14.6	B	29.9	C
		Exist.+PP		14.6	B	30.2	C
3	Lawrence Expressway @ East Duane Avenue	Exist.	Signal	35.8	D	50.8	D
		Exist.+PP		36.1	D	52.5	D
4	Lawrence Expressway @ East Arques Avenue	Exist.	Signal	19.0	B	32.9	C
		Exist.+PP		19.1	B	33.4	C
5	East Arques Avenue @ Santa Trinita Avenue	Exist.	Signal	8.5	A	19.4	B
		Exist.+PP		8.5	A	19.3	B
6	East Arques Avenue @ Deguigne Drive	Exist.	Signal	19.7	B	26.1	C
		Exist.+PP		19.8	B	26.2	C
7	East Arques Avenue @ North Wolfe Road	Exist.	Signal	25.3	C	31.3	C
		Exist.+PP		25.5	C	31.5	C
[+] Exist. = Existing (2012), Exist. + PP = Existing (2012) plus Proposed Project **Bold = Substandard**							

As indicated in Table 4, the study intersections operate from LOS A to LOS D with the addition of project traffic during the AM and PM peak-hours. The analysis worksheets for this scenario are provided in Appendix B.

BACKGROUND (2013) CONDITIONS

Background conditions for this analysis were established as 2013, the year during which the proposed project is anticipated to be completed and fully occupied. To achieve year 2013 traffic conditions, one year of background traffic growth and traffic volumes from approved but not yet constructed projects were incorporated according to the information and direction offered by the City[5].

Table 5 provides a summary of the intersection analysis and Figure 8 provides the AM and PM traffic volumes for this analysis scenario.

[5] Emails from Heba El-Guendy, City of Sunnyvale, September 18, 2012, October 12, 2012, October 18, 2012.

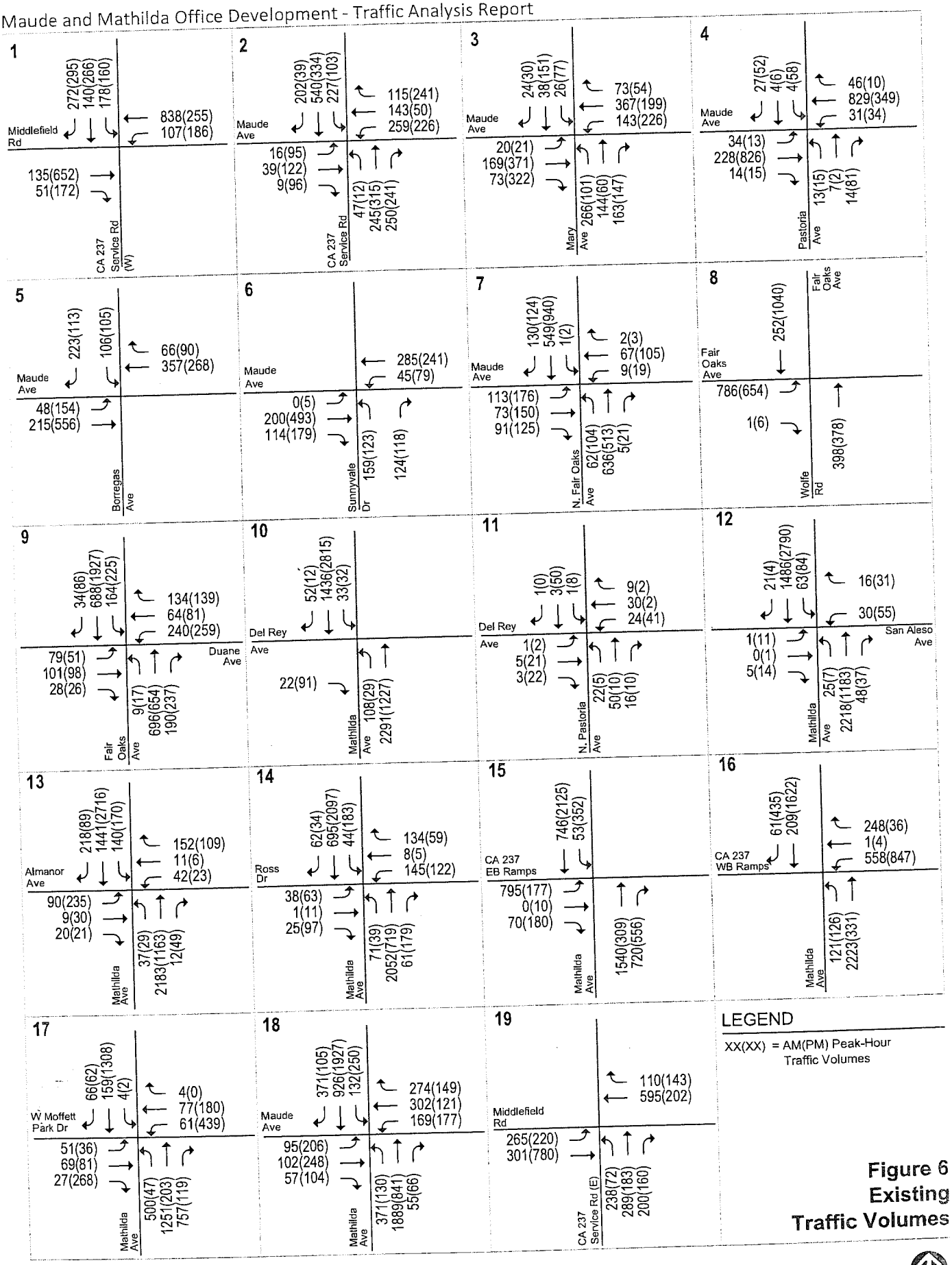

Figure 6
Existing
Traffic Volumes

Table 4
Existing Intersection Levels of Service

Intersection	Peak Hour	Count Date	Avg Delay	LOS
CA 237 Service Rd (W) & Middlefield	AM	04/07/11	19.1	B
	PM	04/07/11	22.6	C
CA 237 Service Rd & Maude Ave	AM	11/08/11	30.1	C
	PM	11/16/11	31.2	C
Mary Ave & Maude Ave	AM	04/07/11	26.4	C
	PM	04/07/11	27.4	C
N Pastoria Ave & Maude Ave	AM	11/08/11	13.6	B
	PM	11/08/11	17.7	B
Borregas Ave & Maude Ave	AM	11/09/11	16.5	B
	PM	11/16/11	13.9	B
Sunnyvale Ave & Maude Ave	AM	11/09/11	18.0	B
	PM	11/16/11	18.1	B
N Fair Oaks Ave & Maude Ave	AM	11/15/11	27.6	C
	PM	11/15/11	28.8	C
Fair Oaks Ave & Wolfe Rd	AM	11/16/11	18.1	B
	PM	11/16/11	18.0	B
Fair Oaks Ave & Duane Ave	AM	11/09/11	28.6	C
	PM	11/09/11	23.9	C
Mathilda Ave & San Aleso Ave	AM	11/08/11	12.2	B
	PM	11/08/11	11.7	B
Mathilda Ave & Almanor Ave	AM	03/08/11	22.2	C
	PM	03/08/11	20.7	C
Mathilda Ave & Ross Dr	AM	03/08/11	14.0	B
	PM	03/08/11	14.6	B
Mathilda Ave & CA237 EB Ramps	AM	03/08/11	15.7	B
	PM	03/08/11	15.1	B
Mathilda Ave & CA237 WB Ramps	AM	03/08/11	14.3	B
	PM	03/08/11	20.1	C
Mathilda Ave & W Moffett Park Dr	AM	03/08/11	18.5	B
	PM	03/08/11	23.1	C
Mathilda Ave & Maude Ave *	AM	03/08/11	44.3	D
	PM	03/08/11	34.0	C
CA 237 Service Rd (E) & Middlefield Rd	AM	04/07/11	23.4	C
	PM	04/07/11	18.5	B

* Denotes CMP intersection

During the AM peak hour, based on the Synchro analysis presented in the Moffett Park Specific Plan (MPSP) EIR, the Mathilda Corridor between Moffett Park and Ross Drive operates at an acceptable LOS. During the PM peak hour in this corridor, the Mathilda Avenue/Moffett Park Drive intersection operates at an unacceptable LOS, while the remaining intersections operate at acceptable levels of service. The overall LOS through the corridor is LOS B during both the AM and PM peak hours.

All Traffic Data

(916) 771-8700

City of Sunnyvale
Pedestrians and Bicycles on Bank 1

File Name : 12-7232-016 Mathilda-Indio
Site Code : 00000000
Start Date : 5/23/2012
Page No : 1

Groups Printed- Unshifted

	Mathilda Ave Southbound					Indio Way Westbound				Mathilda Ave Northbound					Indio Way Eastbound				
Start Time	Left	Thru	Right	U-Turn	App. Total	Left	Thru	Right	App. Total	Left	Thru	Right	U-Turn	App. Total	Left	Thru	Right	App. Total	Int. Total
07:00	1	164	24	7	196	4	0	26	30	4	187	16	2	209	5	0	29	34	469
07:15	0	150	21	2	173	1	0	44	45	7	273	25	3	308	4	0	25	29	555
07:30	1	187	44	5	237	11	2	56	69	8	283	31	11	333	5	0	36	41	680
07:45	1	288	31	1	321	11	0	51	62	7	353	31	3	394	6	0	64	70	847
Total	3	789	120	15	927	27	2	177	206	26	1096	103	19	1244	20	0	154	174	2551
08:00	2	243	31	1	277	9	0	71	80	7	408	20	7	442	5	0	52	57	856
08:15	1	243	29	6	279	31	2	68	101	15	518	29	12	574	6	0	21	27	981
08:30	3	221	27	4	255	43	4	114	161	10	485	42	8	545	9	0	26	35	996
08:45	0	314	22	2	338	26	4	97	127	18	555	29	16	618	7	0	37	44	1127
Total	6	1021	109	13	1149	109	10	350	469	50	1966	120	43	2179	27	0	136	163	3960
16:00	2	414	16	6	438	5	0	11	16	4	206	19	5	234	12	0	46	58	746
16:15	1	436	7	4	448	10	0	16	26	5	206	20	3	234	11	0	43	54	762
16:30	3	451	9	9	472	7	1	16	24	9	234	11	5	259	15	0	39	54	809
16:45	3	547	20	5	575	8	0	23	31	6	215	31	2	254	10	0	54	64	924
Total	9	1848	52	24	1933	30	1	66	97	24	861	81	15	981	48	0	182	230	3241
17:00	4	652	18	13	687	10	0	21	31	5	260	28	6	299	16	0	68	84	1101
17:15	7	749	17	13	786	9	1	11	21	4	228	38	2	272	8	0	87	95	1174
17:30	5	673	18	13	709	14	1	11	26	7	249	31	1	288	11	1	73	85	1108
17:45	7	690	33	12	742	8	0	17	25	8	249	25	4	286	8	0	74	82	1135
Total	23	2764	86	51	2924	41	2	60	103	24	986	122	13	1145	43	1	302	346	4518
Grand Total	41	6422	367	103	6933	207	15	653	875	124	4909	426	90	5549	138	1	774	913	14270
Apprch %	0.6	92.6	5.3	1.5		23.7	1.7	74.6		2.2	88.5	7.7	1.6		15.1	0.1	84.8		
Total %	0.3	45	2.6	0.7	48.6	1.5	0.1	4.6	6.1	0.9	34.4	3	0.6	38.9	1	0	5.4	6.4	

All Traffic Data

(916) 771-8700

City of Sunnyvale
Pedestrians and Bicycles on Bank 1

File Name : 12-7232-016 Mathilda-Indio
Site Code : 00000000
Start Date : 5/23/2012
Page No : 3

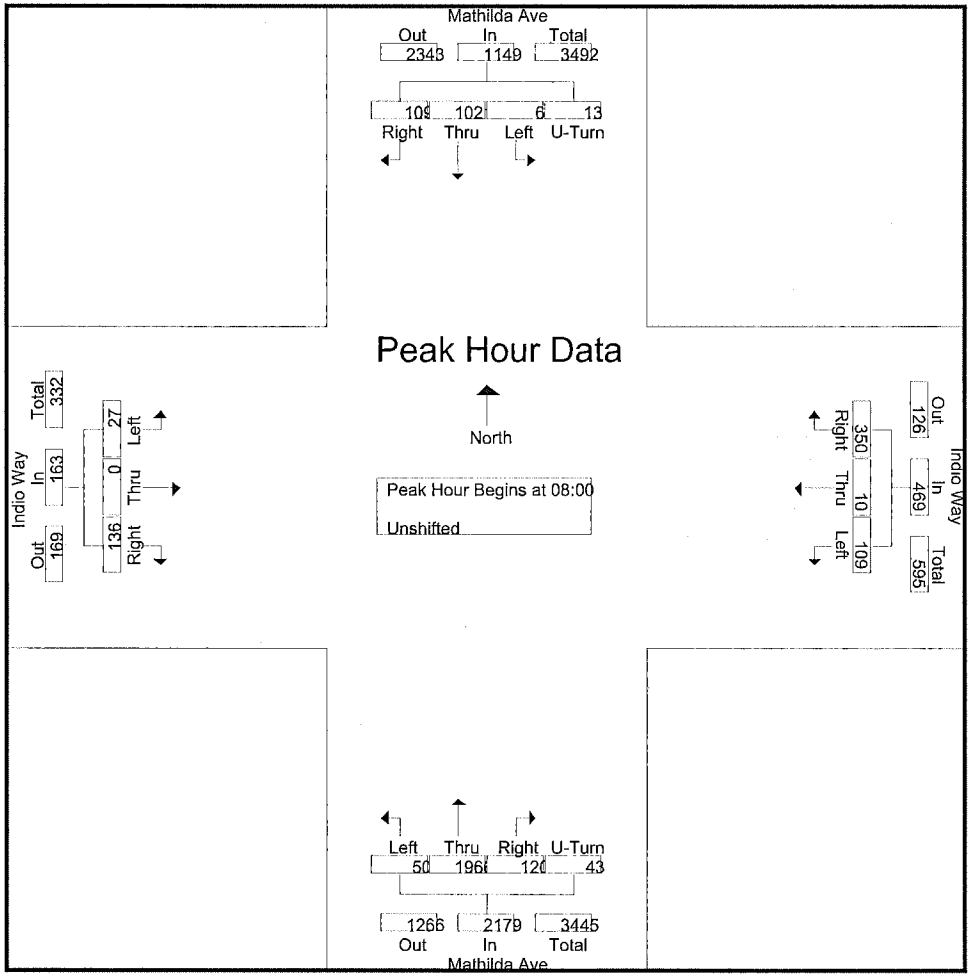

All Traffic Data

(916) 771-8700

City of Sunnyvale
Pedestrians and Bicycles on Bank 1

File Name : 12-7232-016 Mathilda-Indio
Site Code : 00000000
Start Date : 5/23/2012
Page No : 5

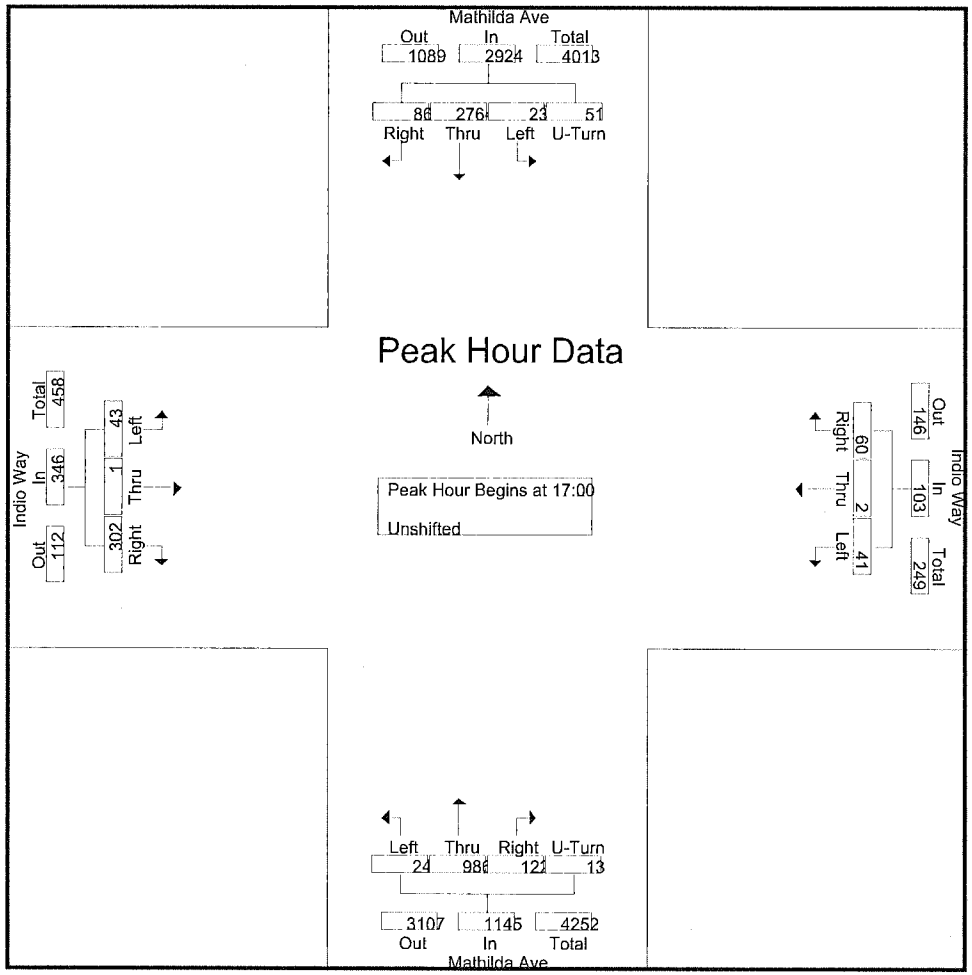

All Traffic Data

(916) 771-8700

City of Sunnyvale
Pedestrians and Bicycles on Bank 1

File Name : 12-7232-017 Mathilda-California
Site Code : 00000000
Start Date : 5/23/2012
Page No : 1

Groups Printed- Unshifted

	Mathilda Ave Southbound					California Ave Westbound				Mathilda Ave Northbound				California Ave Eastbound				
Start Time	Left	Thru	Right	U-Turn	App. Total	Left	Thru	Right	App. Total	Left	Thru	Right	App. Total	Left	Thru	Right	App. Total	Int. Total
07:00	18	163	28	3	212	4	6	27	37	14	165	14	193	11	6	9	26	468
07:15	8	136	29	0	173	4	11	36	51	7	224	9	240	17	1	8	26	490
07:30	12	169	40	3	224	10	9	32	51	11	258	17	286	13	10	13	36	597
07:45	16	319	53	1	389	18	8	31	57	12	327	41	380	15	8	16	39	865
Total	54	787	150	7	998	36	34	126	196	44	974	81	1099	56	25	46	127	2420
08:00	14	244	44	4	306	18	11	41	70	24	360	44	428	19	4	16	39	843
08:15	9	219	57	4	289	10	17	33	60	18	482	50	550	16	8	10	34	933
08:30	10	207	41	2	260	12	12	32	56	29	420	34	483	18	4	24	46	845
08:45	7	281	65	6	359	12	10	30	52	24	554	67	645	26	5	22	53	1109
Total	40	951	207	16	1214	52	50	136	238	95	1816	195	2106	79	21	72	172	3730
16:00	22	371	114	9	516	6	8	18	32	11	192	39	242	15	7	42	64	854
16:15	25	393	83	6	507	8	4	25	37	13	187	29	229	19	3	49	71	844
16:30	29	329	87	8	453	5	14	25	44	15	197	35	247	17	4	55	76	820
16:45	17	501	79	6	603	8	6	22	36	15	215	37	267	20	6	43	69	975
Total	93	1594	363	29	2079	27	32	90	149	54	791	140	985	71	20	189	280	3493
17:00	22	578	112	6	718	12	5	17	34	16	231	51	298	26	9	63	98	1148
17:15	32	705	91	12	840	10	6	33	49	16	234	42	292	27	11	71	109	1290
17:30	25	652	98	11	786	15	7	29	51	17	199	30	246	21	13	58	92	1175
17:45	21	736	71	10	838	10	8	20	38	20	243	47	310	19	14	52	85	1271
Total	100	2671	372	39	3182	47	26	99	172	69	907	170	1146	93	47	244	384	4884
Grand Total	287	6003	1092	91	7473	162	142	451	755	262	4488	586	5336	299	113	551	963	14527
Apprch %	3.8	80.3	14.6	1.2		21.5	18.8	59.7		4.9	84.1	11		31	11.7	57.2		
Total %	2	41.3	7.5	0.6	51.4	1.1	1	3.1	5.2	1.8	30.9	4	36.7	2.1	0.8	3.8	6.6	

All Traffic Data

(916) 771-8700

City of Sunnyvale
Pedestrians and Bicycles on Bank 1

File Name : 12-7232-017 Mathilda-California
Site Code : 00000000
Start Date : 5/23/2012
Page No : 3

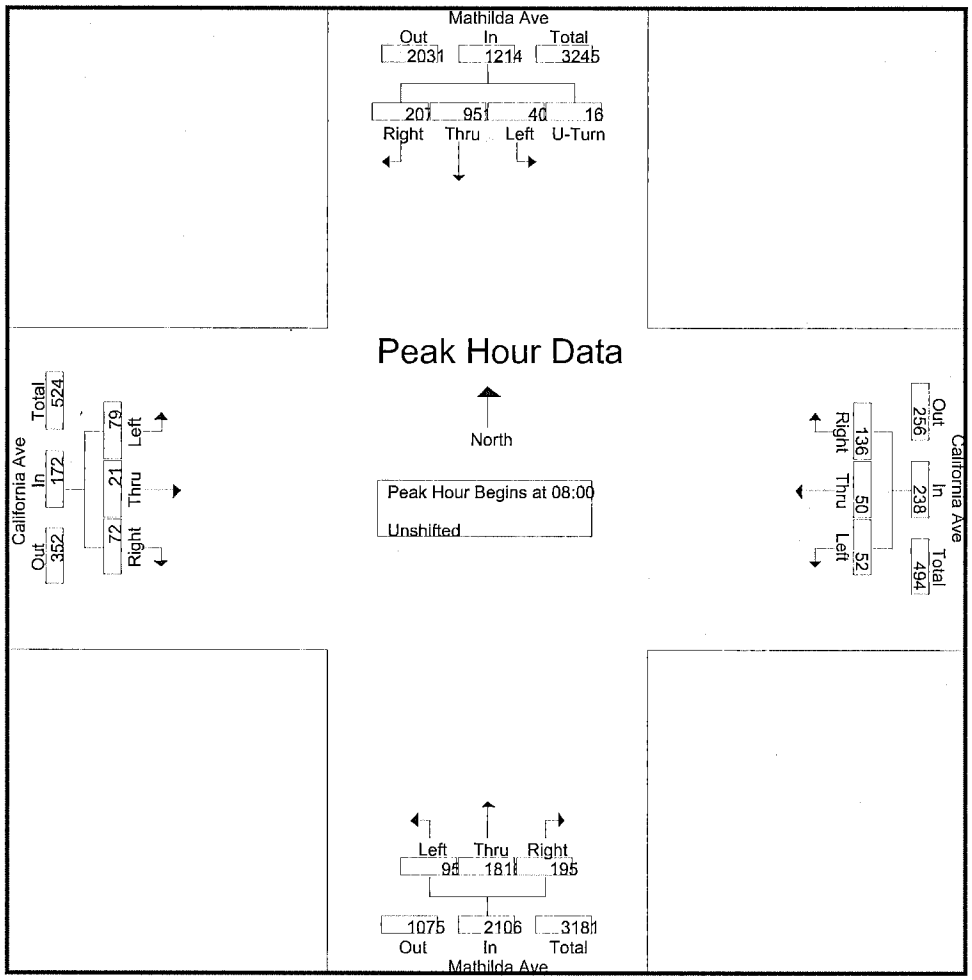

All Traffic Data

(916) 771-8700

City of Sunnyvale
Pedestrians and Bicycles on Bank 1

File Name : 12-7232-017 Mathilda-California
Site Code : 00000000
Start Date : 5/23/2012
Page No : 5

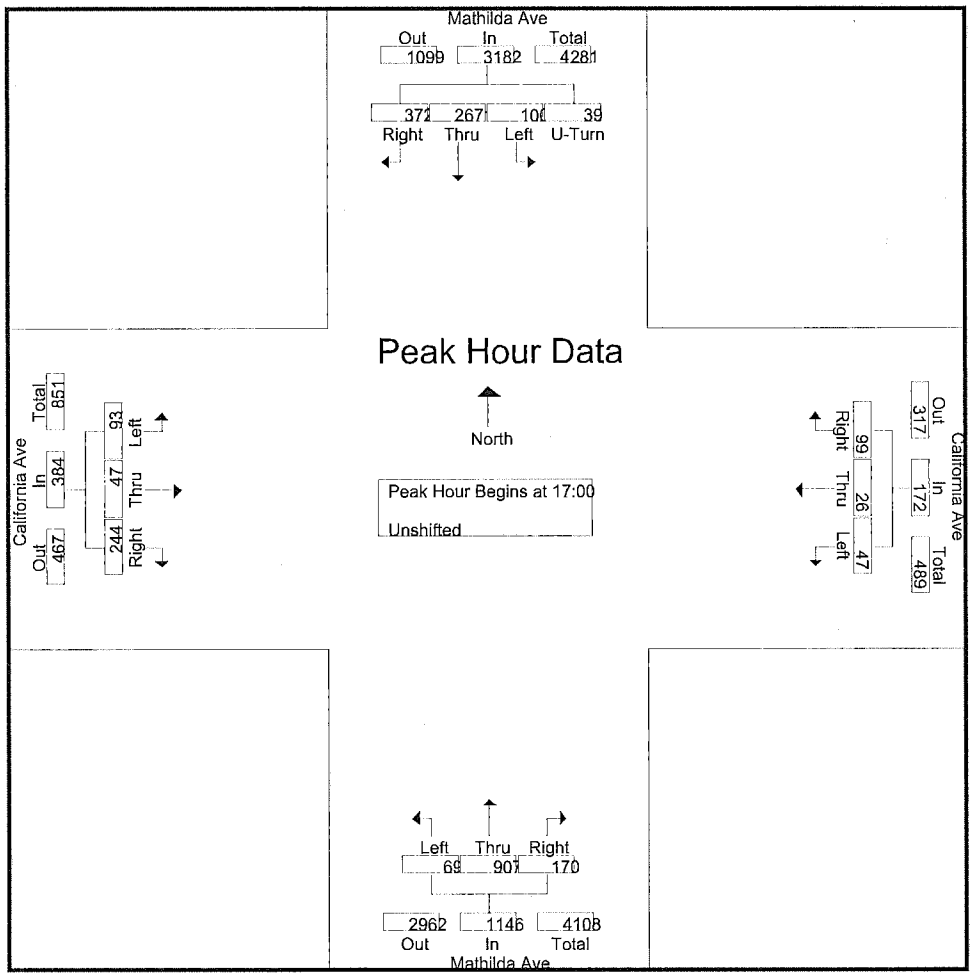

All Traffic Data

(916) 771-8700

City of Sunnyvale
Pedestrians and Bicycles on Bank 1

File Name : 12-7232-018 Mathilda-El Camino Real
Site Code : 00000000
Start Date : 5/23/2012
Page No : 1

Groups Printed- Unshifted

	Mathilda Ave Southbound					El Camino Real Westbound					Mathilda Ave Northbound					El Camino Real Eastbound					
Start Time	Left	Thru	Right	U-Turn	App. Total	Left	Thru	Right	U-Turn	App. Total	Left	Thru	Right	U-Turn	App. Total	Left	Thru	Right	U-Turn	App. Total	Int. Total
07:00	26	44	20	0	90	3	114	29	2	148	40	132	2	0	174	22	53	17	0	92	504
07:15	30	51	18	3	102	2	143	38	1	184	47	150	3	1	201	23	68	15	2	108	595
07:30	28	56	31	3	118	1	165	44	0	210	57	209	2	1	269	42	88	13	0	143	740
07:45	25	72	47	7	151	0	225	65	0	290	68	279	1	2	350	49	82	12	2	145	936
Total	109	223	116	13	461	6	647	176	3	832	212	770	8	4	994	136	291	57	4	488	2775
08:00	43	73	51	2	169	6	231	46	0	283	62	369	6	2	439	72	116	19	5	212	1103
08:15	40	70	47	1	158	5	267	61	0	333	76	362	1	0	439	88	144	20	1	253	1183
08:30	39	75	37	2	153	3	235	83	1	322	66	415	5	1	487	68	116	21	3	208	1170
08:45	34	86	48	6	174	14	245	84	1	344	93	445	10	2	550	62	169	46	11	288	1356
Total	156	304	183	11	654	28	978	274	2	1282	297	1591	22	5	1915	290	545	106	20	961	4812
16:00	95	197	49	1	342	13	184	36	3	236	45	85	8	10	148	57	272	45	4	378	1104
16:15	124	200	52	5	381	4	186	42	4	236	46	106	10	5	167	56	309	43	1	409	1193
16:30	90	217	65	9	381	15	207	47	4	273	47	98	9	3	157	63	316	52	3	434	1245
16:45	101	264	61	4	430	16	187	51	5	259	51	74	14	1	140	46	272	44	2	364	1193
Total	410	878	227	19	1534	48	764	176	16	1004	189	363	41	19	612	222	1169	184	10	1585	4735
17:00	147	320	84	5	556	12	172	46	4	234	62	95	11	4	172	46	315	55	2	418	1380
17:15	122	447	109	1	679	17	221	51	3	292	38	109	18	3	168	52	329	49	8	438	1577
17:30	117	434	94	4	649	7	184	61	13	265	52	99	15	6	172	52	260	44	1	357	1443
17:45	145	336	92	4	577	9	204	63	5	281	51	79	9	4	143	74	345	66	6	491	1492
Total	531	1537	379	14	2461	45	781	221	25	1072	203	382	53	17	655	224	1249	214	17	1704	5892
Grand Total	1206	2942	905	57	5110	127	3170	847	46	4190	901	3106	124	45	4176	872	3254	561	51	4738	18214
Apprch %	23.6	57.6	17.7	1.1		3	75.7	20.2	1.1		21.6	74.4	3	1.1		18.4	68.7	11.8	1.1		
Total %	6.6	16.2	5	0.3	28.1	0.7	17.4	4.7	0.3	23	4.9	17.1	0.7	0.2	22.9	4.8	17.9	3.1	0.3	26	

	Mathilda Ave Southbound					El Camino Real Westbound					Mathilda Ave Northbound					El Camino Real Eastbound					
Start Time	Left	Thru	Right	U-Turn	App. Total	Left	Thru	Right	U-Turn	App. Total	Left	Thru	Right	U-Turn	App. Total	Left	Thru	Right	U-Turn	App. Total	Int. Total
Peak Hour Analysis From 07:00 to 08:45 - Peak 1 of 1																					
Peak Hour for Entire Intersection Begins at 08:00																					
08:00	**43**	73	**51**	2	169	6	231	46	0	283	62	369	6	**2**	439	72	116	19	5	212	1103
08:15	40	70	47	1	158	5	**267**	61	0	333	76	362	1	0	439	**88**	144	20	1	253	1183
08:30	39	75	37	2	153	3	235	83	**1**	322	66	415	5	1	487	68	116	21	3	208	1170
08:45	34	**86**	48	**6**	**174**	**14**	245	**84**	1	**344**	**93**	**445**	**10**	2	**550**	62	**169**	**46**	**11**	**288**	**1356**
Total Volume	156	304	183	11	654	28	978	274	2	1282	297	1591	22	5	1915	290	545	106	20	961	4812

All Traffic Data

(916) 771-8700

City of Sunnyvale
Pedestrians and Bicycles on Bank 1

File Name : 12-7232-018 Mathilda-El Camino Real
Site Code : 00000000
Start Date : 5/23/2012
Page No : 3

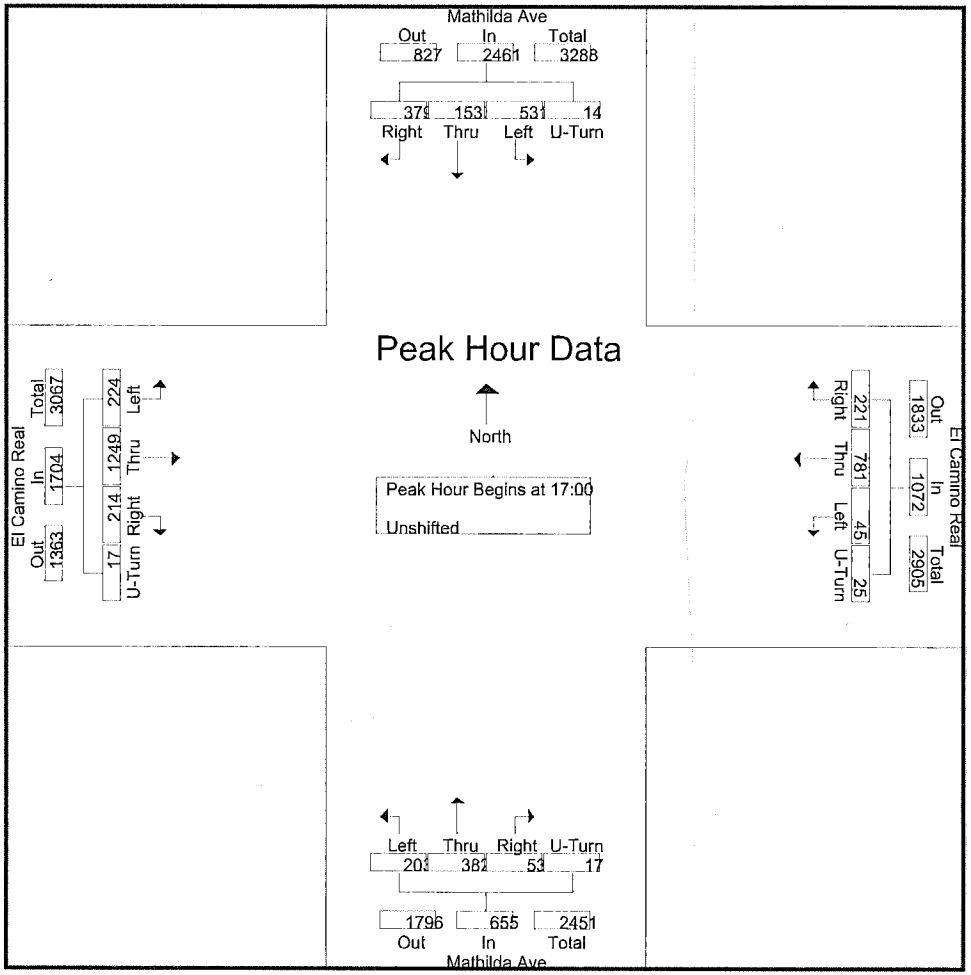

Type of peak hour being reported: Intersection Peak

Method for determining peak hour: Total Entering Volume

LOCATION: Mathilda Ave -- Java Dr
CITY/STATE: Sunnyvale, CA

QC JOB #: 10801612
DATE: Thu, Sep 06 2012

Peak-Hour: 4:50 PM -- 5:50 PM
Peak 15-Min: 5:00 PM -- 5:15 PM

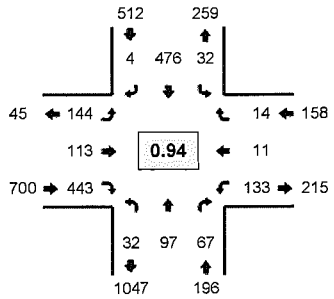

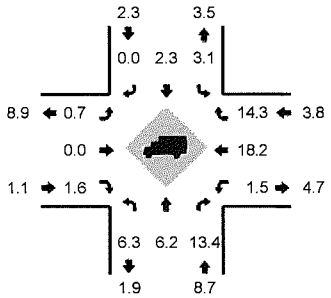

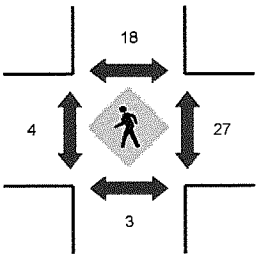

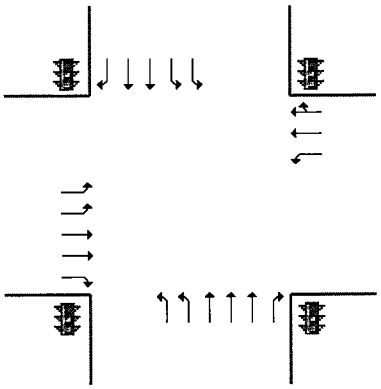

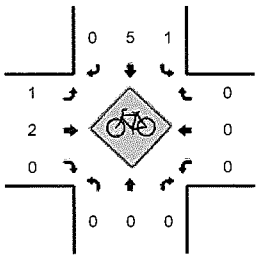

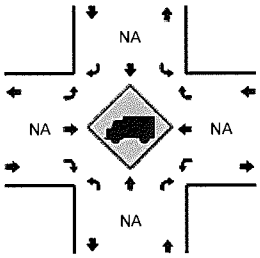

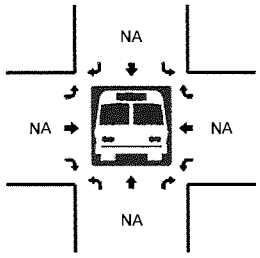

5-Min Count Period Beginning At	Mathilda Ave (Northbound)				Mathilda Ave (Southbound)				Java Dr (Eastbound)				Java Dr (Westbound)				Total	Hourly Totals
	Left	Thru	Right	U	Left	Thru	Right	U	Left	Thru	Right	U	Left	Thru	Right	U		
4:30 PM	0	10	7	0	2	36	0	0	11	3	33	0	4	0	0	0	106	
4:35 PM	0	7	5	0	1	36	1	0	14	13	54	0	9	1	0	0	141	
4:40 PM	1	8	0	0	0	29	0	0	22	7	44	0	1	0	1	0	113	
4:45 PM	3	6	6	0	0	26	1	0	14	7	31	0	5	1	0	0	100	
4:50 PM	7	7	5	0	0	42	0	1	12	10	35	0	10	2	3	0	134	
4:55 PM	5	5	3	0	4	40	1	0	13	4	35	0	12	1	0	2	125	
5:00 PM	1	9	4	0	1	30	0	0	7	4	47	0	7	0	1	0	111	
5:05 PM	1	3	8	0	3	35	0	0	18	15	48	0	23	0	1	1	156	
5:10 PM	5	6	8	0	7	46	0	0	13	12	36	0	13	2	2	1	151	
5:15 PM	0	7	8	0	4	38	1	0	2	6	32	0	5	2	2	0	107	
5:20 PM	0	7	10	0	1	50	0	2	9	14	41	0	14	0	0	0	148	
5:25 PM	3	7	4	1	1	40	0	0	14	8	38	0	9	1	0	0	126	1518
5:30 PM	2	11	2	0	0	49	1	1	16	3	26	0	6	0	2	1	120	1532
5:35 PM	6	14	5	0	4	31	0	0	10	21	41	0	9	0	1	0	142	1533
5:40 PM	0	8	8	0	1	35	1	0	21	12	43	0	11	0	1	1	142	1562
5:45 PM	0	13	2	1	2	40	0	0	9	4	21	0	7	3	1	1	104	1566
5:50 PM	4	8	3	2	7	38	1	0	5	7	30	0	17	0	2	0	124	1556
5:55 PM	2	5	8	1	4	32	0	0	6	7	34	0	3	2	0	0	104	1535
6:00 PM	3	8	5	1	2	22	0	0	7	9	32	0	6	1	0	0	96	1520
6:05 PM	2	5	3	1	1	34	2	0	17	10	41	0	14	1	0	2	133	1497
6:10 PM	1	5	9	1	0	30	0	0	11	13	30	0	12	3	0	0	115	1461
6:15 PM	1	7	2	1	4	27	0	1	9	8	27	0	13	2	1	0	103	1457
6:20 PM	0	10	2	0	2	30	0	0	11	7	36	0	8	0	0	0	106	1415
6:25 PM	0	10	9	0	1	24	0	0	10	11	28	0	7	2	1	0	103	1392

Peak 15-Min Flowrates	Northbound				Southbound				Eastbound				Westbound				Total
	Left	Thru	Right	U	Left	Thru	Right	U	Left	Thru	Right	U	Left	Thru	Right	U	
All Vehicles	28	72	80	0	44	444	0	0	152	124	524	0	172	8	16	8	1672
Heavy Trucks	4	8	4		0	12	0		0	0	8		4	4	0		44
Pedestrians		4				12				4				24			44
Bicycles	0	0	0		0	2	0		0	0	0		0	0	0		2
Railroad																	
Stopped Buses																	

Comments: 1412

Report generated on 9/26/2012 6:21 PM

SOURCE: Quality Counts, LLC (http://www.qualitycounts.net) 1-877-580-2212

Type of peak hour being reported: Intersection Peak

Method for determining peak hour: Total Entering Volume

LOCATION: Mathilda Ave -- Maude Ave

CITY/STATE: Sunnyvale, CA

QC JOB #: 10801613

DATE: Thu, Sep 06 2012

Peak-Hour: 5:10 PM -- 6:10 PM

Peak 15-Min: 5:20 PM -- 5:35 PM

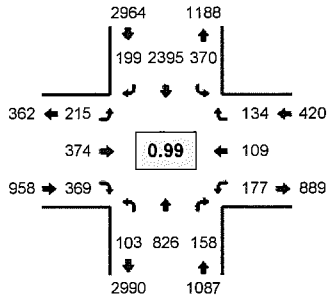

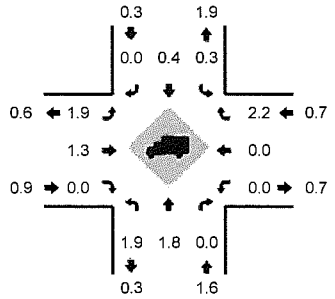

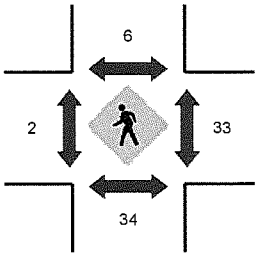

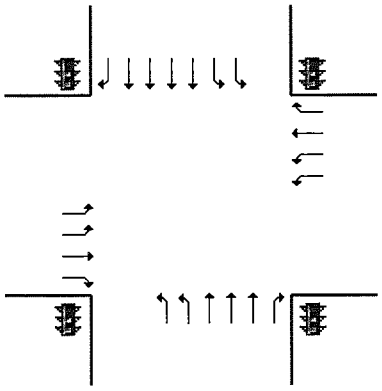

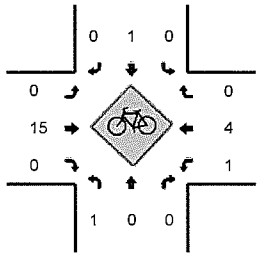

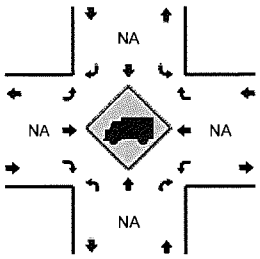

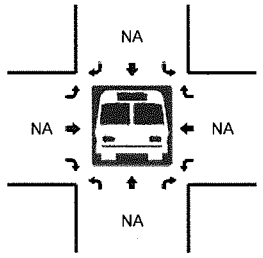

5-Min Count Period Beginning At	Mathilda Ave (Northbound)				Mathilda Ave (Southbound)				Maude Ave (Eastbound)				Maude Ave (Westbound)				Total	Hourly Totals
	Left	Thru	Right	U	Left	Thru	Right	U	Left	Thru	Right	U	Left	Thru	Right	U		
4:30 PM	0	55	10	3	16	92	9	2	11	23	9	0	11	11	20	0	272	
4:35 PM	3	75	14	1	28	156	16	1	5	12	13	0	5	10	13	0	352	
4:40 PM	2	52	9	0	28	129	16	3	11	28	19	0	12	8	17	0	334	
4:45 PM	11	62	10	6	22	156	10	1	14	11	14	0	11	5	8	0	341	
4:50 PM	2	50	12	8	21	150	11	1	11	14	15	0	13	9	8	0	325	
4:55 PM	3	59	11	4	21	168	10	0	19	27	18	0	15	11	12	0	378	
5:00 PM	6	55	11	3	25	188	15	1	20	17	26	0	12	7	12	0	398	
5:05 PM	3	100	12	4	21	158	12	5	19	24	31	0	19	11	14	0	433	
5:10 PM	0	70	18	3	22	227	11	1	14	31	36	0	14	15	8	0	470	
5:15 PM	6	67	11	6	27	245	10	2	11	23	25	0	7	8	8	0	456	
5:20 PM	5	80	8	3	26	202	20	2	11	28	22	0	18	6	11	0	442	
5:25 PM	6	49	17	2	34	208	13	1	24	35	41	0	20	16	10	0	476	4677
5:30 PM	7	77	11	5	20	206	11	0	23	34	29	0	19	3	14	0	459	4864
5:35 PM	13	51	13	5	18	134	15	2	21	28	34	0	23	13	16	0	386	4898
5:40 PM	0	76	12	3	10	207	21	0	25	35	34	0	18	5	15	0	461	5025
5:45 PM	4	65	14	5	40	206	14	1	12	34	31	0	11	5	11	0	453	5137
5:50 PM	5	73	17	7	38	193	23	0	26	25	26	0	7	5	11	0	456	5268
5:55 PM	4	73	14	3	28	176	23	2	10	22	28	0	11	9	8	0	411	5301
6:00 PM	2	73	8	3	45	194	20	2	19	37	38	0	13	13	16	0	483	5386
6:05 PM	2	72	15	4	49	197	18	0	19	42	25	0	16	11	6	0	476	5429
6:10 PM	8	61	19	3	30	191	21	0	23	38	36	0	8	10	11	0	459	5418
6:15 PM	6	55	16	2	21	138	25	2	12	37	23	0	6	14	12	0	369	5331
6:20 PM	2	66	13	1	17	168	26	0	14	29	33	0	9	7	10	0	395	5284
6:25 PM	2	81	13	6	37	165	28	1	14	30	24	0	10	8	13	0	432	5240

Peak 15-Min Flowrates	Northbound				Southbound				Eastbound				Westbound				Total
	Left	Thru	Right	U	Left	Thru	Right	U	Left	Thru	Right	U	Left	Thru	Right	U	
All Vehicles	72	824	144	40	320	2464	176	12	232	388	368	0	228	100	140	0	5508
Heavy Trucks	0	16	0		0	4	0		0	0	0		0	0	4		24
Pedestrians		8				0				0				20			28
Bicycles	0	0	0		0	0	0		0	2	0		1	0	0		3
Railroad																	
Stopped Buses																	

Comments: 1413

Report generated on 9/26/2012 6:21 PM

SOURCE: Quality Counts, LLC (http://www.qualitycounts.net) 1-877-580-2212

399 Java Drive

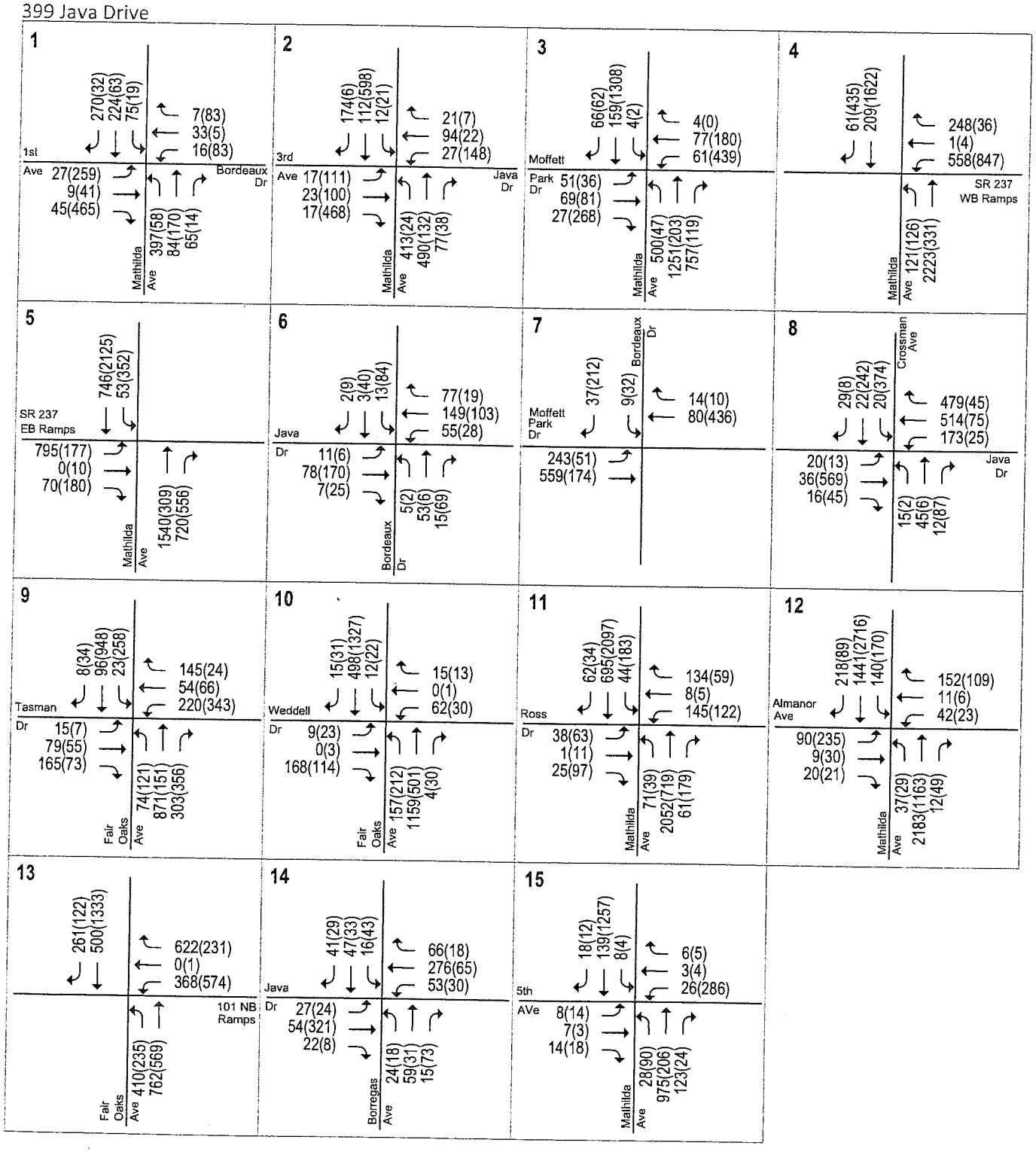

LEGEND

XX(XX) = AM(PM) Peak-Hour Traffic Volumes

Figure 6
Existing Traffic Volumes

NORTH
Not to Scale