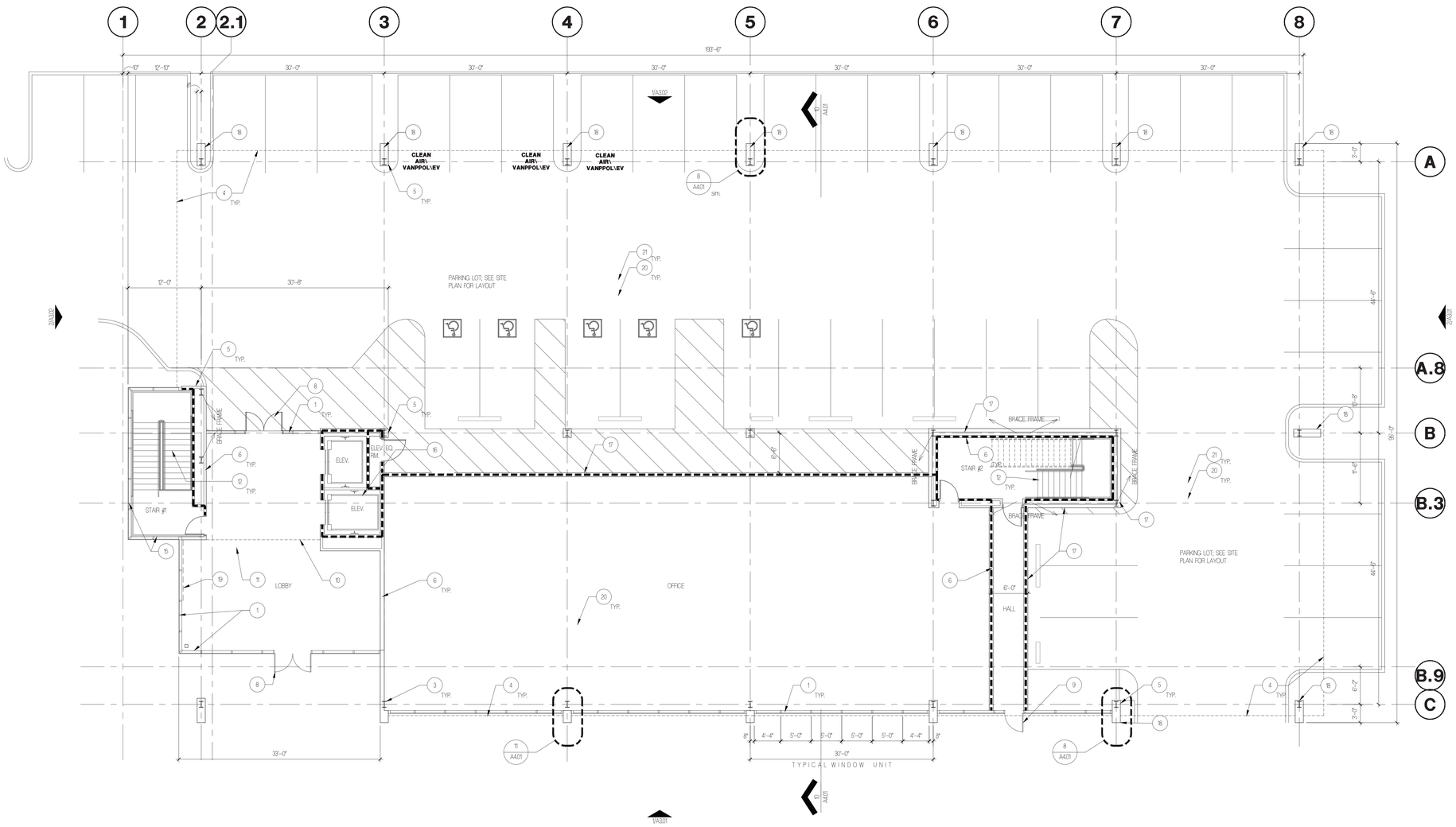

1 FIRST FLOOR PLAN

SCALE: 1/8" = 1'-0"

NORTH

KEY NOTES

1. CLEAR ANODIZED ALUMINUM FRAMING WITH GLAZING
2. COMPOSITE METAL PANELS ON METAL STUD FRAMING
3. STRUCTURAL STEEL COLUMN
4. LINE OF BUILDING FACE ABOVE
5. COMPOSITE METAL PANELS ON METAL STUD FRAMING COLUMN COVER ON 4'-0" H CONC BASE
6. GYP. BD. PARTITIONS
7. COMPOSITE METAL COLUMN COVER
8. HERCULITE ENTRY DOORS
9. CLEAR ANODIZED ALUMINUM ENTRY DOORS
10. LINE OF BALCONY ABOVE
11. OPEN TO ABOVE/ BELOW
12. CONC FILLED METAL PAN TREADS AND RISERS W/ STEEL TUBE HAND/ GUARDRAILS. SEE DETAILS 3, 4 AND 7/AA01
13. NOT USED
14. LINE OF ROOF OVERHANG ABOVE
15. CLEAR ANODIZED ALUMINUM FRAMING CLEAR GLAZING, VERTICAL AND HORZONTAL MULLIONS TO BE BUTT GLAZED. PERMETER MULLIONS TO BE 4" AND 4" HORZONTAL AS SHOWN.
16. 3,000 LB PASSENGER AND 4,000 LB SERVICE ELEVATORS, MACHINE ROOM LESS, KONE ECOSPACE OR APPROVED EQUAL, CAB, PASSENGER INTERIOR CLEAR DIMENSIONS MINIMUM 6'-8" X 4'-6"
17. 2" EIFS ON WEATHER BARRIER, EXTR SHEATHING AND METAL STUD FRAMING ON 4'-0" CMU BASE
18. PROVIDE 4" H 12" CMU BASE UNDER METAL PANELS AT COLUMNS IN PARKING AREA. SEE 12/A401
19. AREA OF DELUGE HEADS, MIN. 10' FROM FACE OF FACE OF STAIRWELL WALL
20. CONCRETE PODIUM WILL BE DESIGNED TO SUPPORT OFFICE BUILDING LOADS. BY OTHERS N.I.C.
21. ASSUME CAN LIGHTING THROUGHOUT PARKING GARAGE

KEY NOTES- STRUCTURAL

F1. 2 1/2" REG. WT. CONC. OVER 3" – 18 GA. DECK 3/8" DIA. X 4 1/2" NELSON STUDS @ 12" (MIN. O.C.) ALL BEAMS

F2. TYPICAL FLOOR FRAMING W 24 BEAMS, W 27 GIRDERS, W 12 COLUMNS – STEEL BUDGET = 14.5 P.S.F. (INCLUDES BRACES)

ONE HOUR RATED WALL/ PARTITION

ARC TEC
ARCHITECTURAL TECHNOLOGIES
www.arctecinc.com
Arizona
2960 East Northern Avenue, Building C
Phoenix, Arizona 85028
P 602.953.2355 F 602.953.2988
California
99 Almaden Boulevard, Suite 840
San Jose, California 95113
P 408.496.0676 F 408.496.1121

The "user(s)" in possession of this documentation acknowledge(s) that ARC TEC's and ARC TEC consultants' drawings, specifications, reports, electronic data and other documentation are instruments of service. ARC TEC and ARC TEC consultants shall be deemed the author and owner of such documentation. The "user(s)" in possession of this documentation shall not sue or authorize any other person to use ARC TEC's or ARC TEC consultants' instruments of service for any purpose other than the original project for which the user(s) sole risk and without liability to ARC TEC and ARC TEC's consultants. The user(s) possessing this documentation shall indemnify and hold harmless ARC TEC and ARC TEC's consultants and agents and employees from and against all claims, damages losses and expenses, including but not limited to attorneys' fees, arising out of unauthorized reuse of ARC TEC or ARC TEC's consultants instruments of service.
Written dimensions on this drawing shall have precedence over any scaled dimension. DO NOT SCALE THIS DRAWING for accurate dimensions and notify ARC TEC of any discrepancies.

© Copyright ARC TEC, Inc. 2013

In Association with:

A Planning Application For:

1095 E. El Camino Real

Sunnyvale, CA

The **SOBRATO** organization

DATE	DESCRIPTION
03.15.13	PLANNING SUBMITTAL
05.15.13	PLANNING SUBMITTAL
07.19.13	PRELIMINARY - SCHEMATIC TENANT COORDINATION
09.24.13	4TH SUBMITTAL - OWNER COORD.

FIRST FLOOR PLAN

A2.11

PROJECT NO: 133383

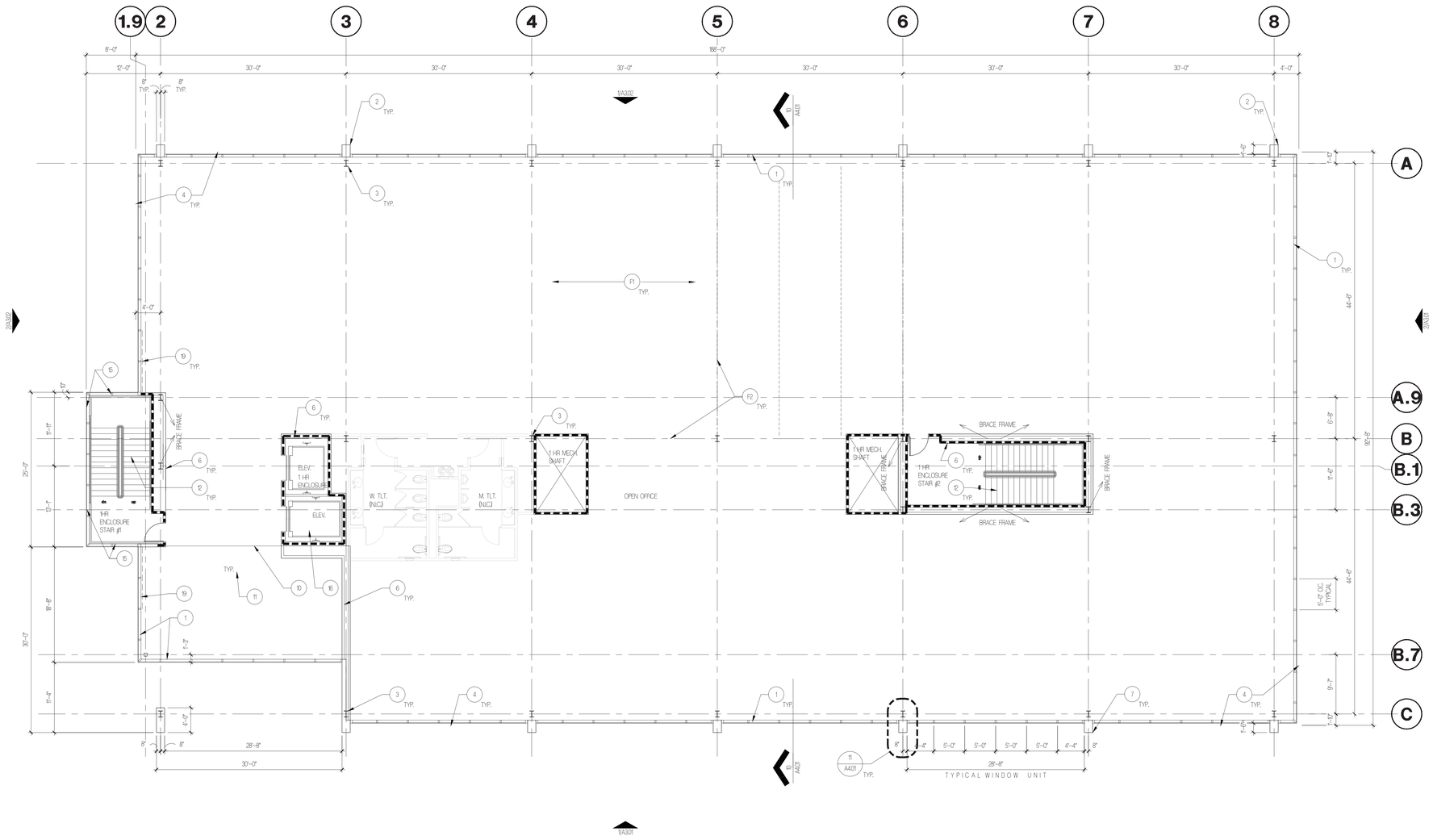

1 SECOND FLOOR PLAN

SCALE: 1/8" = 1'-0"

NORTH

KEY NOTES

1. CLEAR ANODIZED ALUMINUM FRAMING WITH GLAZING
2. COMPOSITE METAL PANELS ON METAL STUD FRAMING
3. STRUCTURAL STEEL COLUMN
4. LINE OF BUILDING FACE ABOVE
5. COMPOSITE METAL PANELS ON METAL STUD FRAMING COLUMN COVER ON 4'-0" H CONC BASE
6. GYP. BD. PARTITIONS
7. COMPOSITE METAL COLUMN COVER
8. HERCULITE ENTRY DOORS
9. CLEAR ANODIZED ALUMINUM ENTRY DOORS
10. LINE OF BALCONY ABOVE
11. OPEN TO ABOVE/ BELOW
12. CONC FILLED METAL PAN TREADS AND RIBERS W/ STEEL TUBE HAND/ GUARDRAILS. SEE DETAILS 3, 4 AND 7/AA01
13. NOT USED
14. LINE OF ROOF OVERHANG ABOVE
15. CLEAR ANODIZED ALUMINUM FRAMING CLEAR GLAZING, VERTICAL AND HORZONTAL MULLIONS TO BE BUTT GLAZED. PERIMETER MULLIONS TO BE 4" AND 4" HORZONTAL AS SHOWN
16. 3,000 LB PASSENGER AND 4,000 LB SERVICE ELEVATORS, MACHINE ROOM LESS; KONE ECOSPACE OR APPROVED EQUAL. CAB: PASSENGER INTERIOR CLEAR DIMENSIONS MINIMUM 6'-8" X 4'-6"
17. 2" EIFS ON WEATHER BARRIER, EXTR SHEATHING AND METAL STUD FRAMING ON 4'-0" CMU BASE
18. PROVIDE 4" H 12" CMU BASE UNDER METAL PANELS AT COLUMNS IN PARKING AREA. SEE 12/AA01
19. AREA OF DELUGE HEADS, MIN. 10' FROM FACE OF FACE OF STAIRWELL WALL
20. CONCRETE PODIUM WILL BE DESIGNED TO SUPPORT OFFICE BUILDING LOADS, BY OTHERS N.I.C.
21. ASSUME CAN LIGHTING THROUGHOUT PARKING GARAGE

KEY NOTES- STRUCTURAL

F1. 2 $\frac{1}{2}$" REG. WT. CONC. OVER 3" – 18 GA. DECK $\frac{3}{4}$" DIA. X 4 $\frac{1}{2}$" NELSON STUDS @ 12" (MIN. O.C.) ALL BEAMS

F2. TYPICAL FLOOR FRAMING W 24 BEAMS, W 27 GIRDERS, W 12 COLUMNS – STEEL BUDGET = 14.5 PSF. (INCLUDES BRACES)

ARC TEC
ARCHITECTURAL TECHNOLOGIES
www.arctecinc.com
Arizona
2960 East Northern Avenue, Building C
Phoenix, Arizona 85028
P 602.953.2355 F 602.953.2988
California
99 Almaden Boulevard, Suite 840
San Jose, California 95113
P 408.496.0676 F 408.496.1121

The "user(s)" in possession of this documentation acknowledge(s) that ARC TEC's and ARC TEC consultants' drawings, specifications, reports, electronic data and other documentation are instruments of service. ARC TEC and ARC TEC consultants shall be deemed the author and owner of such documentation. The "user(s)" in possession of this documentation shall not sue or authorize any other person to use ARC TEC's or ARC TEC consultants' instruments of service for any purpose not agreed to in writing by ARC TEC and at the user(s) sole risk and without liability to ARC TEC and ARC TEC's consultants. The user(s) possessing this documentation shall indemnify and hold harmless ARC TEC and ARC TEC's consultants and agents and employees from and against all claims, damages losses and expenses, including but not limited to attorneys' fees, arising out of unauthorized reuse of ARC TEC or ARC TEC's consultants instruments of service. Written dimensions on this drawing shall have precedence over any scaled dimension. DO NOT SCALE THIS DRAWING for accurate dimensions and notify ARC TEC of any discrepancies.

© Copyright ARC TEC, Inc. 2013

In Association with:

A Planning Application For:

1095 E. El Camino Real

Sunnyvale, CA

The **SOBRATO** organization

DATE	DESCRIPTION
03.15.13	PLANNING SUBMITTAL
05.15.13	PLANNING RESUBMITTAL
07.19.13	PRELIMINARY - SCHEDULING TENANT COORDINATION
09.24.13	4TH SUBMITTAL - OWNER COORD.

SECOND FLOOR PLAN

A2.12

PROJECT NO: 133383

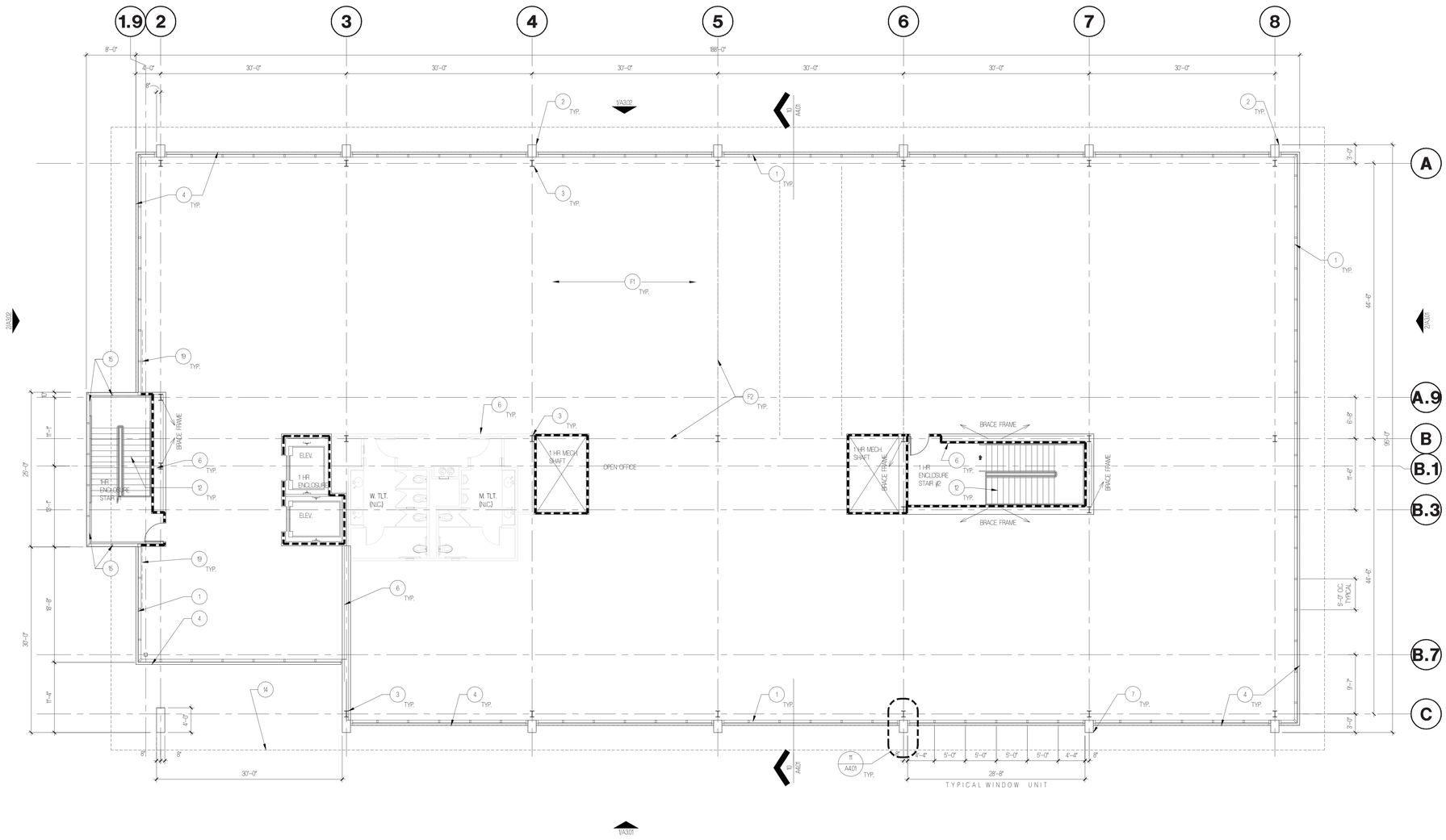

1 **THIRD FLOOR PLAN**

SCALE: 1/8" = 1'-0"

NORTH

KEY NOTES

1. CLEAR ANODIZED ALUMINUM FRAMING WITH GLAZING
2. COMPOSITE METAL PANELS ON METAL STUD FRAMING
3. STRUCTURAL STEEL COLUMN
4. LINE OF BUILDING FACE ABOVE
5. COMPOSITE METAL PANELS ON METAL STUD FRAMING COLUMN COVER ON 4'-0" H CONC BASE
6. GYP. BD. PARTITIONS
7. COMPOSITE METAL COLUMN COVER
8. HERCULITE ENTRY DOORS
9. CLEAR ANODIZED ALUMINUM ENTRY DOORS
10. LINE OF BALCONY ABOVE
11. OPEN TO ABOVE/ BELOW
12. CONC FILLED METAL PAN TREADS AND RISERS W/ STEEL TUBE HAND/ GUARDRAILS. SEE DETAILS 3, 4 AND 7/AA01
13. NOT USED
14. LINE OF ROOF OVERHANG ABOVE
15. CLEAR ANODIZED ALUMINUM FRAMING CLEAR GLAZING, VERTICAL AND HORZONTAL MULLIONS TO BE BUTT GLAZED. PERIMETER MULLIONS TO BE 4" AND 4" HORZONTAL AS SHOWN
16. 3,000 LB PASSENGER AND 4,000 LB SERVICE ELEVATORS, MACHINE ROOM LESS; KONE ECOSPACE OR APPROVED EQUAL. CAB: PASSENGER INTERIOR CLEAR DIMENSIONS MINIMUM 6'-8" X 4'-6"
17. 2" EIFS ON WEATHER BARRIER, EXTR SHEATHING AND METAL STUD FRAMING ON 4'-0" CMU BASE
18. PROVIDE 4" H 12" CMU BASE UNDER METAL PANELS AT COLUMNS IN PARKING AREA. SEE 12/AA01
19. AREA OF DELUGE HEADS, MIN. 10' FROM FACE OF FACE OF STAIRWELL WALL
20. CONCRETE PODIUM WILL BE DESIGNED TO SUPPORT OFFICE BUILDING LOADS, BY OTHERS N.I.C.
21. ASSUME CAN LIGHTING THROUGHOUT PARKING GARAGE

KEY NOTES- STRUCTURAL

F1. 2 $\frac{1}{2}$" REG. WT. CONC. OVER 3" – 18 GA. DECK $\frac{3}{8}$" DIA. X 4 $\frac{1}{2}$" NELSON STUDS @ 12" (MIN. O.C.) ALL BEAMS

F2. TYPICAL FLOOR FRAMING W 24 BEAMS, W 27 GIRDERS, W 12 COLUMNS – STEEL BUDGET = 14.5 PSF. (INCLUDES BRACES)

ARC TEC
ARCHITECTURAL TECHNOLOGIES
www.arctecinc.com
Arizona
2960 East Northern Avenue, Building C
Phoenix, Arizona 85028
P 602.953.2355 F 602.953.2988
California
99 Almaden Boulevard, Suite 840
San Jose, California 95113
P 408.496.0676 F 408.496.1121

The "user(s)" in possession of this documentation acknowledge(s) that ARC TEC's and ARC TEC consultants' drawings, specifications, reports, electronic data and other documentation are instruments of service. ARC TEC and ARC TEC consultants shall be deemed the author and owner of such documentation. The "user(s)" in possession of this documentation shall not sue or authorize any other person to use ARC TEC's or ARC TEC consultants' instruments of service for any purpose without ARC TEC's and ARC TEC's consultants' express written consent and without liability to ARC TEC and ARC TEC's consultants. The user(s) possessing this documentation shall indemnify and hold harmless ARC TEC and ARC TEC's consultants and agents and employees from and against all claims, damages losses and expenses, including but not limited to attorneys' fees, arising out of unauthorized reuse of ARC TEC or ARC TEC's consultants instruments of service. Written dimensions on this drawing shall have precedence over any scaled dimension. DO NOT SCALE THIS DRAWING for accurate dimensions and notify ARC TEC of any discrepancies.

© Copyright ARC TEC, Inc. 2013

In Association with:

A Planning Application For:

1095 E. El Camino Real

Sunnyvale, CA

The **SOBRATO** organization

DATE	DESCRIPTION
03.15.13	PLANNING SUBMITTAL
05.15.13	PLANNING RESUBMITTAL
07.19.13	PRELIMINARY - SCHEDULE TENANT COORDINATION
09.24.13	4TH SUBMITTAL - OWNER COORD.

THIRD FLOOR PLAN

A2.13

PROJECT NO: 133383

P:\2013 Jobs\133383 SOB-1095 ElCamino\PA\133383-PA_A2.13.dwg - Sep 24, 2013, 11:23am - jpalmg

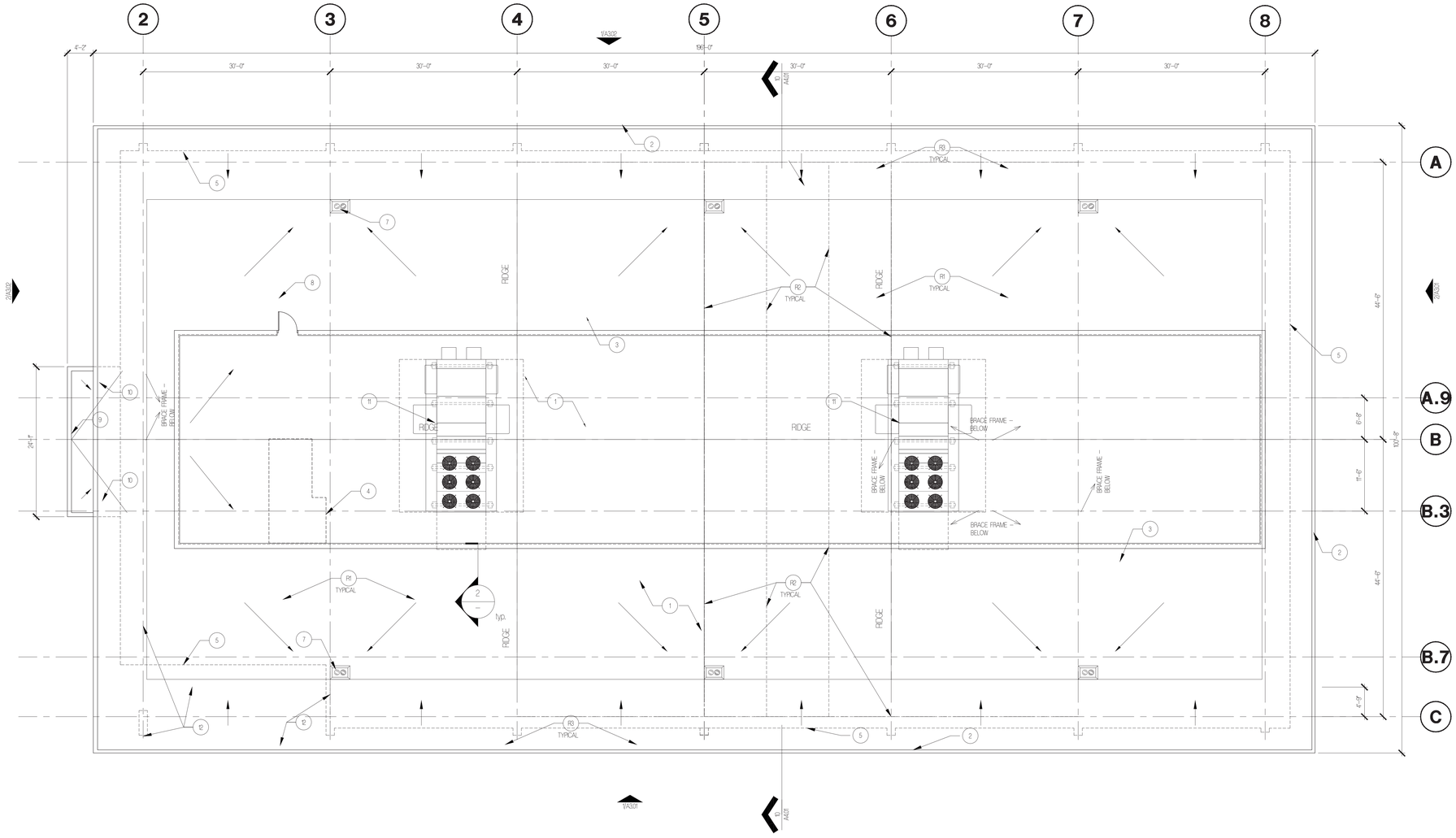

1 ROOF PLAN

SCALE: 1/8" = 1'-0"

NORTH

SECTION 075113 - BUILT-UP ASPHALT ROOFING

PART 2 - PRODUCTS

2.1 MANUFACTURER

A. Basis of Design: Johns Manville Roofing Systems

2.2 ROOFING MEMBRANE PLIES

A. Glass-Fiber Base-Ply Sheet: ASTM D 2178, Type [IV] [VI], asphalt-impregnated, glass-fiber felt. Product: GlasPly Premier

2.3 roofing membrane capSheet

A. Cap Sheet: ASTM D 3909, asphalt-impregnated and -coated, glass-fiber cap sheet, with white reflelective coarse mineral-granule top surfacing and fine mineral surfacing on bottom surface. Product: GlasKap CR

2.4 FLASHING MATERIALS

A. Backer Sheet: ASTM D 2178, Type IV, asphalt-impregnated, glass-fiber felt. Product: GlasPly Premier
B. Flashing Sheet: ASTM D 6221, Grade G, Type I, composite polyester- and glass-fiber-reinforced, SBS-modified asphalt sheet; granular surfaced; suitable for application method specified. Product: DynaFlex CR.

2.5 ASPHALT MATERIALS

A. Roofing Asphalt: ASTM D 312, Type III.
B. Asphalt Roofing Cement: ASTM D 4586, asbestos free, of consistency required by roofing system manufacturer for application. Product: Bestile Industrial Roof Cement.
C. General: Auxiliary materials recommended by roofing system manufacturer for intended use and compatible with built-up roofing.
D. Mastic Sealant: As required by Johns Manville.
E. Fasteners: Factory-coated steel fasteners and metal or plastic plates meeting corrosion-resistance provisions in FMG 4470, designed for fastening roofing membrane components to substrate, tested by manufacturer for required pullout strength, and provided by the roofing system manufacturer. Product: UltraFast Fasteners and Plates.
F. Metal Flashing Sheet: Metal flashing sheet is specified in Section 07620 "Sheet Metal Flashing and Trim."
G. Roofing Granules: Ceramic-coated roofing granules matching specified cap sheet, provided by roofing system manufacturer.
H. Miscellaneous Accessories: Provide miscellaneous accessories recommended by roofing system manufacturer.

2.6 WALKWAYS

A. Walkway Pads: Mineral-granule-surfaced, reinforced modified asphalt composition, slip-resisting pads, manufactured as a traffic pad for foot traffic provided by roofing system manufacturer, with a pad size of 32 inch x 32 inch. Product: Johns Manville DynaTred.

2.7 COVER BOARD

A. Perlite Board: ASTM C 728; composed of expanded perlite, cellulosic fibers, binders and waterproofing agents with top surface seal-coated. Product: 3/4" Fesco Board.

2.8 ROOF INSULATION

A. General: Provide preformed roof insulation boards that comply with requirements and referenced standards, selected from manufacturer's standard sizes and of thicknesses indicated.
B. Polyisocyanurate Board Insulation: ASTM C 1289, Type II, Product: ENRGY 3
   1. Provide insulation package with R Value of at least 19
   2. Install no boards thicker than 1.5". If insulation package required is thicker than 1.5", install in multiple layers.

2.9 INSULATION ACCESSORIES

A. General: Roof insulation accessories recommended by insulation manufacturer for intended use and compatible with membrane roofing.
B. Provide factory preformed saddles, crickets, tapered edge strips, and other insulation shapes where indicated for sloping to drain. Fabricate to slopes indicated. Product: Tapered Pre-Cut Cricket.
C. Cold Fluid-Applied Adhesive: Manufacturer's No VOC, two-component cold fluid-applied adhesive formulated to adhere roof insulation to substrate. Product: MBR Bonding Adhesive.
D. Insulation Cant Strips: ASTM C 728, perlite insulation board. Product: FesCant Plus.

3.3 INSULATION and Cover Board INSTALLATION

A. Coordinate installing roof system components so insulation and cover board is not exposed to precipitation or left exposed at the end of the workday.
B. Comply with roofing system manufacturer's written instructions for installing roof insulation and cover board.
C. Insulation Cant Strips: Install and secure preformed 45-degree insulation cant strips at junctures of roofing membrane system with vertical surfaces or angle changes greater than 45 degrees per manufacturer's instruction.
D. Install boards with long joints in a continuous straight line with end joints staggered between rows, abutting edges and ends between boards. Fill gaps exceeding 1/4 inch (6 mm) with like material.
   1. Cut and fit boards within 1/4 inch (6 mm) of nailers, projections, and penetrations.
E. Install one or more layers of insulation under area of roofing to achieve required thickness. Where overall thickness is 1.5 inches (38 mm) or greater, install 2 or more layers with joints of each succeeding layer staggered from joints of previous layer a minimum of 6 inches (150 mm) in each direction.
F. Trim surface of boards where necessary at roof drains so completed surface is flush and does not restrict flow of water.
G. Install tapered edge strips at perimeter edges of roof that do not terminate at vertical surfaces.
H. Adhered Insulation and Cover Board: Install each layer of insulation and cover board and adhere to substrate as follows:
   1. Set each layer in a solid mopping of hot roofing asphalt.
I. Proceed with installation only after unsatisfactory conditions have been corrected.

3.4 ROOFING MEMBRANE INSTALLATION, GENERAL

A. Install roofing system specification 52JC according to roofing system manufacturer's written instructions, applicable recommendations of Johns Manville "Bituminous Roofing Binder", and requirements in this Section.
B. Start installation of roofing membrane in presence of roofing system manufacturer's technical personnel.
C. Cooperate with testing and inspecting agencies engaged or required to perform services for installing roofing system.
D. Coordinate installing roofing system so insulation and other components of the roofing membrane system not permanently exposed are not subjected to precipitation or left uncovered at the end of the workday or when rain is imminent.
   1. Provide tie-offs at end of each day's work to cover exposed roofing membrane sheets and insulation with a course of coated felt set in roofing cement or hot roofing asphalt with joints and edges sealed.
   2. Complete terminations and base flashings and provide temporary seals to prevent water from entering completed sections of roofing system.
   3. Remove and discard temporary seals before beginning work on adjoining roofing.
E. Asphalt Heating: Heat roofing asphalt and apply within plus or minus 25 deg F (14 deg C) of equivscous temperature unless otherwise required by roofing system manufacturer. Do not raise roofing asphalt temperature above equivscous temperature range more than one hour before time of application. Do not exceed roofing asphalt manufacturer's recommended temperature limits during roofing asphalt heating. Do not heat roofing asphalt within 25 deg F (14 deg C) of flash point. Discard roofing asphalt maintained at a temperature exceeding finished blowing temperature for more than 4 hours.
F. Substrate-Joint Penetrations: Prevent roofing asphalt from penetrating substrate joints, entering building, or damaging roofing system components or adjacent building construction
G. Proceed with installation only after unsatisfactory conditions have been corrected.

3.5 ROOFING MEMBRANE INSTALLATION

Select number of ply sheets from options in paragraph below.

A. Install four sheets starting at low point of roofing system. Align ply sheets without stretching. Shingle side laps of ply sheets uniformly to achieve required number of plies throughout thickness of roofing membrane. Shingle in direction to shed water. Extend ply sheets over and terminate beyond cants.
   1. Embed each ply sheet in a solid mopping of hot roofing asphalt applied at rate required by roofing system manufacturer, to form a uniform membrane without ply sheets touching.

Cap sheet counts as one ply in roofing membrane ply count.

B. Cap Sheet: Install lapped granulated cap sheet starting at low point of roofing system. Offset laps from laps of preceding ply sheets and align cap sheet without stretching. Lap in direction to shed water. Extend cap sheet over and terminate beyond cants.
   1. Embed cap sheet in a solid mopping of hot roofing asphalt applied at rate required by roofing system manufacturer.

3.6 FLASHING AND STRIPPING INSTALLATION

A. Install base flashing over cant strips and other sloping and vertical surfaces, at roof edges, and at penetrations through roof, and secure to substrates according to roofing system manufacturer's written instructions and as follows:
   1. Prime substrates with asphalt primer if required by roofing system manufacturer.
   2. Backer Sheet Application: Mechanically fasten backer sheet to walls or parapets. Adhere backer sheet over roofing membrane at cants in a solid mopping of hot roofing asphalt.
   3. Backer Sheet Application: Install backer sheet and adhere to substrate in a solid mopping of hot roofing asphalt.
   4. Backer Sheet Application: Install backer sheet and adhere to substrate in approved adhesive applied at rate required by roofing system manufacturer.
   5. Flashing Sheet Application: Adhere flashing sheet to substrate in a solid mopping of hot roofing asphalt applied at EVT. Apply hot roofing asphalt to back of flashing sheet if recommended by roofing system manufacturer.
B. Extend base flashing up walls or parapets a minimum of 8 inches (200 mm) above roofing membrane and 4 inches (100 mm) onto field of roofing membrane.
C. Mechanically fasten top of base flashing securely at terminations and perimeter of roofing at a rate given by roofing system manufacturer.
   1. Seal top termination of base flashing with a strip of glass-fiber fabric set in MBR Flashing cement.
D. Roof Drains: Set 24" x 48" 4 lb lead flashing sheet in a bed of MBR Flashing Cement on completed roofing membrane. Cover metal flashing with roofing membrane cap-sheet stripping and extend a minimum of 4 inches (100 mm) beyond edge of metal flashing onto field of roofing membrane. Clamp roofing membrane, metal flashing, and stripping into roof-drain clamping ring.
E. Roof Drains: Flash drain using PermaFlash system. Clamp roofing membrane, flashing, and stripping into roof-drain clamping ring.
   1. Install stripping according to roofing system manufacturer's written instructions.
F. Proceed with installation only after unsatisfactory conditions have been corrected.

3.7 WALKWAY INSTALLATION

A. Walkway Pads: Install walkway pads using units of size indicated or, if not indicated, of manufacturer's standard size according to walkway pad manufacturer's written instructions.
   1. Sweep away loose aggregate surfacing and set walkway pads in additional flood coat of hot roofing asphalt.
B. Proceed with installation only after unsatisfactory conditions have been corrected.

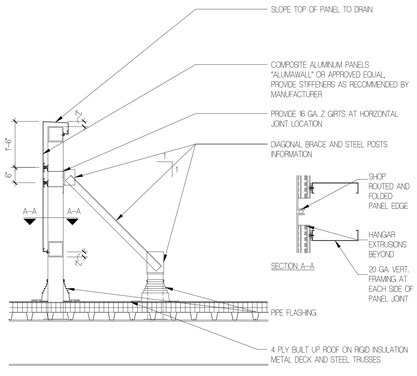

2 ROOF SCREEN SECTION

SCALE: 1/2" = 1'-0"

KEY NOTES

1. 4 PLY BUILT UP ROOFING
2. ALUMINUM PANEL COPING
3. ROOF SCREEN WALL WITH ALUMINUM COMPOSITE PANEL FINISH
4. ELEVATOR OVERRUN (IF REQUIRED)
5. WALL BELOW SHOWN DASHED
6. NOT USED
7. ROOF AND OVERFLOW DRAINS
8. ACCESS PANEL AT ROOF SCREEN
9. PREFINISHED ALUMINUM COPING
10. POLY. ISO. CRICKET
11. HVAC ROOF TOP EQUIPMENT
12. STEEL TUBE OUTRIGGERS AT OVERHANG OVER ENTRY

KEY NOTES - STRUCTURAL

R1. $1\frac{1}{2}$" – 16 GA METAL DECK (NO CONC. WITH HEAVY WELD PATTERN)
R2. W21 BEAMS TYP. AND W24 GIRDERS TYP. SLOPE FOR DRAINAGE
R3. METAL STUD FRAMING AT EYEBROW

ARC TEC
ARCHITECTURAL TECHNOLOGIES
www.arctecinc.com
Arizona
2960 East Northern Avenue, Building C
Phoenix, Arizona 85028
P 602.953.2355 F 602.953.2988
California
99 Almaden Boulevard, Suite 840
San Jose, California 95113
P 408.496.0676 F 408.496.1121

The "user(s)" in possession of this documentation acknowledge(s) that ARC TEC's and ARC TEC consultants' drawings, specifications, reports, electronic data and other documentation are instruments of service. ARC TEC and ARC TEC consultants shall be deemed the author and owner of such documentation. The "user(s)" in possession of this documentation shall not sue or authorize any other person to use ARC TEC's or ARC TEC consultants' instruments of service for any purpose not agreed to in writing by ARC TEC and at the user(s) sole risk and without liability to ARC TEC and ARC TEC's consultants. The user(s) possessing this documentation shall indemnify and hold harmless ARC TEC and ARC TEC's consultants and agents and employees from and against all claims, damages losses and expenses, including but not limited to attorneys' fees, arising out of unauthorized reuse of ARC TEC or ARC TEC's consultants instruments of service. Written dimensions on this drawing shall have precedence over any scaled dimension. DO NOT SCALE THIS DRAWING for accurate dimensions and notify ARC TEC of any discrepancies.

© Copyright ARC TEC, Inc. 2013

In Association with:

The SOBRATO organization

A Planning Application For:

1095 E. El Camino Real

Sunnyvale, CA

DATE	DESCRIPTION
03.15.13	PLANNING SUBMITTAL
05.15.13	PLANNING SUBMITTAL
07.19.13	PRELIMINARY - SCHEMATIC TENANT COORDINATION
09.24.13	4TH SUBMITTAL - OWNER COORD.

ROOF PLAN AND DETAIL

A2.31

PROJECT NO: 133383

ATTACHMENT F
PAGE 60 of 76

P:\2013 Jobs\133383.000-1095 W El Camino\PA\133383-PA_A231.dwg - Sep 24, 2013, 11:28am - jeffrig

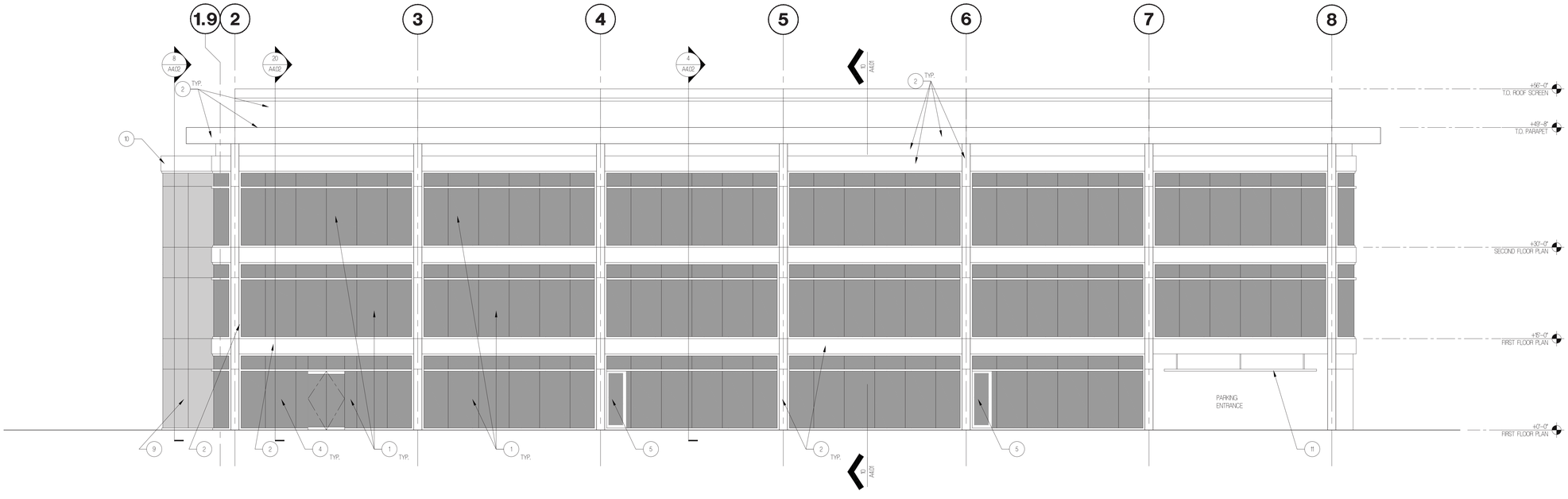

1 SOUTH ELEVATION

SCALE: 1/8" = 1'-0"

KEY NOTES

1. CLEAR ANODIZED ALUMINUM FRAMING GLAZING, VERTICAL MULLIONS TO BE BUTT GLAZED. PERIMETER, JAMB AND HORIZONTAL MULLIONS ARE TO BE 4"
2. COMPOSITE METAL PANELS ON METAL STUD FRAMING
3. COLUMN COVER
4. HERCULITE ENTRY DOORS
5. CLEAR ANODIZED ALUMINUM ENTRY DOORS
6. FINISH T.B.D. ON METAL STUD FRAMING
7. NOT USED
8. NOT USED
9. CLEAR ANODIZED ALUMINUM FRAMING CLEAR GLAZING, VERTICAL AND HORIZONTAL MULLIONS TO BE BUTT GLAZED. PERIMETER MULLIONS TO BE 4" AND 4" HORIZONTAL AS SHOWN
10. PREFINISHED ALUMINUM COPING
11. PVC HEIGHT RESTRICTION BAR
12. NOT USED
13. ACCESS PANEL AT ROOF SCREEN

FINISHES

CLEAR GLAZING:		SMOKEY GREY GLAZING:	
T VIRACON LOW E GLASS VE1-2M		T VIRACON LOW E GLASS VE1-45	
VLT	70%	VLT	55%
ULTRAVIOLET	10%	ULTRAVIOLET	10%
ROUT	1%	ROUT	7%
U-VALUES:		U-VALUES:	
WINTER	.29	WINTER	.30
SUMMER	.26	SUMMER	.26
SC	.44	SC	.34
SHGC	.38	SHGC	.29
LSG	1.84	LSG	1.34

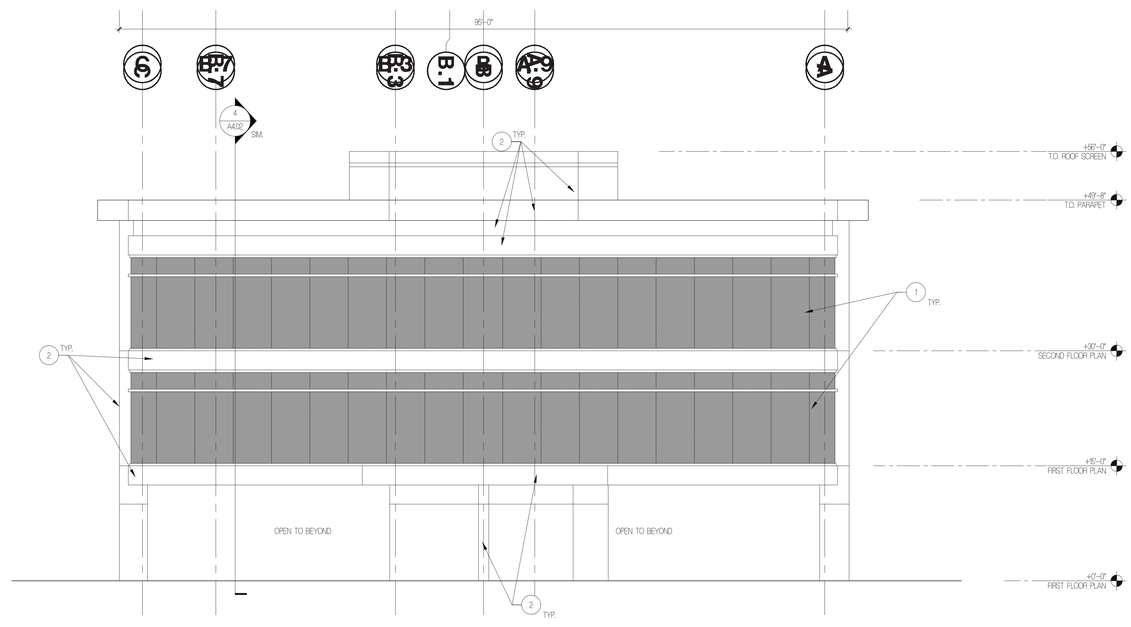

2 EAST ELEVATION

SCALE: 1/4" = 1'-0"

ARC TEC
ARCHITECTURAL TECHNOLOGIES
www.arctecinc.com

Arizona
2960 East Northern Avenue, Building C
Phoenix, Arizona 85028
P 602.953.2355 F 602.953.2988

California
99 Almaden Boulevard, Suite 840
San Jose, California 95113
P 408.496.0676 F 408.496.1121

The "user(s)" in possession of this documentation acknowledge(s) that ARC TEC's and ARC TEC consultants' drawings, specifications, reports, electronic data and other documentation are instruments of service. ARC TEC and ARC TEC consultants shall be deemed the author and owner of such documentation. The "user(s)" in possession of this documentation shall not sue or authorize any other person to use ARC TEC's or ARC TEC consultants' instruments of service for any purpose other than the original project for which it was prepared and the user(s) sole risk and without liability to ARC TEC and ARC TEC's consultants. The user(s) possessing this documentation shall indemnify and hold harmless ARC TEC and ARC TEC's consultants and agents and employees from and against all claims, damages losses and expenses, including but not limited to attorneys' fees, arising out of unauthorized reuse of ARC TEC or ARC TEC's consultants instruments of service.
Written dimensions on this drawing shall have precedence over any scaled dimension. DO NOT SCALE THIS DRAWING for accurate dimensions and notify ARC TEC of any discrepancies.

© Copyright ARC TEC, Inc. 2013

In Association with:

A Planning Application For:
1095 E. El Camino Real
Sunnyvale, CA

The **SOBRATO** organization

DATE	DESCRIPTION
03.15.13	PLANNING SUBMITTAL
05.15.13	PLANNING SUBMITTAL
07.19.13	PRELIMINARY - SCHEMATIC TENANT COORDINATION
09.24.13	4TH SUBMITTAL - OWNER COORD.

EXTERIOR ELEVATIONS

A3.01

PROJECT NO: 133383

P:\2013 Jobs\133383.000-1095 W El Camino\PA\133383-PA_A301.dwg - Sep 24, 2013, 11:12am - cathrig

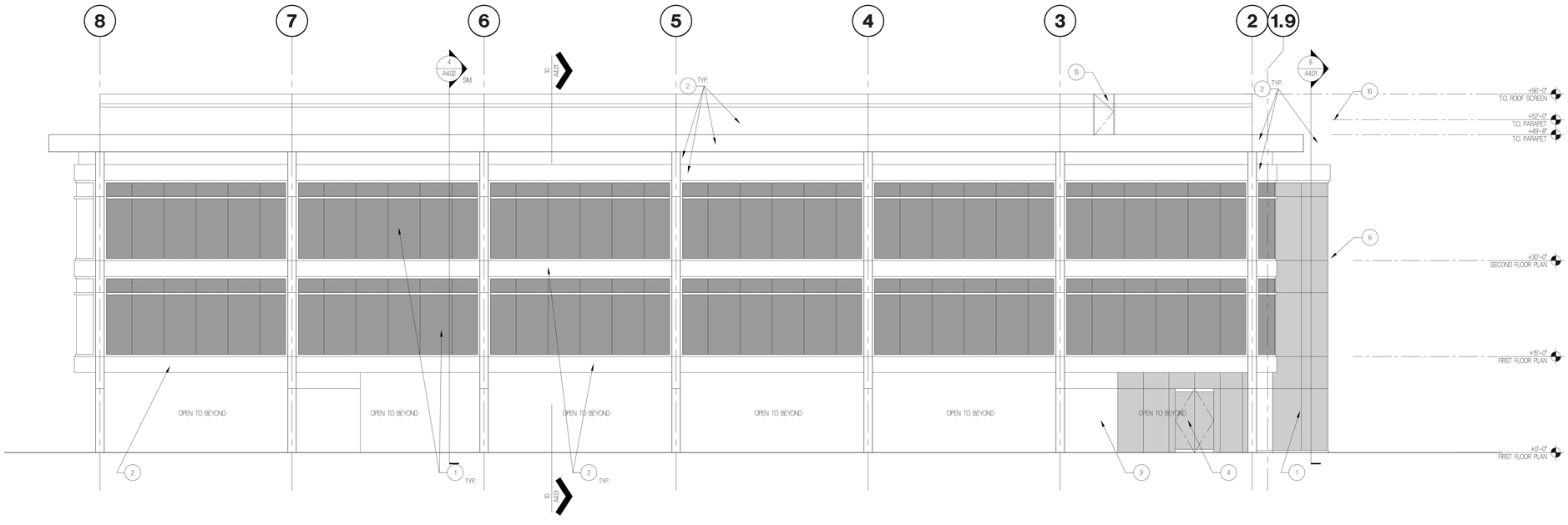

1 NORTH ELEVATION

SCALE: 1/4" = 1'-0"

KEY NOTES

1. CLEAR ANODIZED ALUMINUM FRAMING GLAZING, VERTICAL MULLIONS TO BE BUTT GLAZED. PERIMETER, JAMB AND HORIZONTAL MULLIONS ARE TO BE 4"
2. COMPOSITE METAL PANELS ON METAL STUD FRAMING
3. COLUMN COVER
4. HERCULITE ENTRY DOORS
5. CLEAR ANODIZED ALUMINUM ENTRY DOORS
6. FINISH T.B.D. ON METAL STUD FRAMING
7. NOT USED
8. NOT USED
9. CLEAR ANODIZED ALUMINUM FRAMING CLEAR GLAZING, VERTICAL AND HORIZONTAL MULLIONS TO BE BUTT GLAZED. PERIMETER MULLIONS TO BE 4" AND 4" HORIZONTAL AS SHOWN
10. PREFINISHED ALUMINUM COPING
11. PVC HEIGHT RESTRICTION BAR
12. NOT USED
13. ACCESS PANEL AT ROOF SCREEN

FINISHES

CLEAR GLAZING:		SMOKEY GREY GLAZING:	
T VIRACON LOW E GLASS VE1-2M		T VIRACON LOW E GLASS VE1-45	
VLT	70%	VLT	55%
ULTRAVIOLET	10%	ULTRAVIOLET	10%
ROUT	1%	ROUT	7%
U-VALUES:		U-VALUES:	
WINTER	.29	WINTER	.30
SUMMER	.26	SUMMER	.26
SC	.44	SC	.34
SHGC	.38	SHGC	.29
LSG	1.84	LSG	1.34

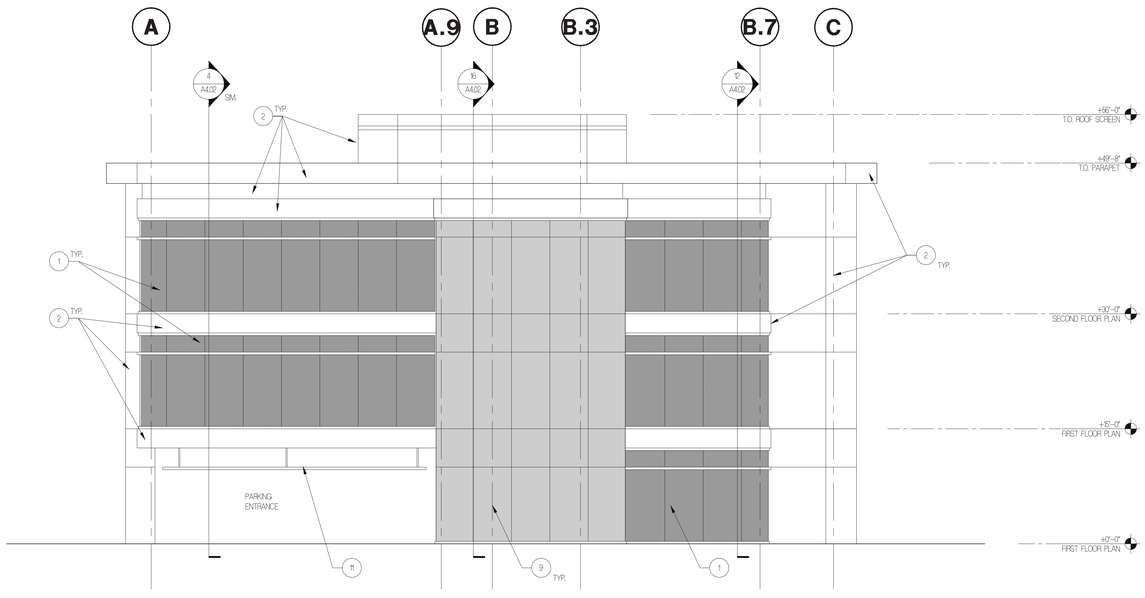

2 WEST ELEVATION

SCALE: 1/4" = 1'-0"

ARC TEC
ARCHITECTURAL TECHNOLOGIES
www.arctecinc.com
Arizona
2960 East Northern Avenue, Building C
Phoenix, Arizona 85028
P 602.953.2355 F 602.953.2988
California
99 Almaden Boulevard, Suite 840
San Jose, California 95113
P 408.496.0676 F 408.496.1121

The "user(s)" in possession of this documentation acknowledge(s) that ARC TEC's and ARC TEC consultants' drawings, specifications, reports, electronic data and other documentation are instruments of service. ARC TEC and ARC TEC consultants shall be deemed the author and owner of such documentation. The "user(s)" in possession of this documentation shall not sue or authorize any other person to use ARC TEC's or ARC TEC consultants' instruments of service for any purpose not agreed to in writing by ARC TEC and at the user(s) sole risk and without liability to ARC TEC and ARC TEC's consultants. The user(s) possessing this documentation shall indemnify and hold harmless ARC TEC and ARC TEC's consultants and agents and employees from and against all claims, damages losses and expenses, including but not limited to attorneys' fees, arising out of unauthorized reuse of ARC TEC or ARC TEC's consultants instruments of service.
Written dimensions on this drawing shall have precedence over any scaled dimension. DO NOT SCALE THIS DRAWING for accurate dimensions and notify ARC TEC of any discrepancies.

© Copyright ARC TEC, Inc. 2013

In Association with:

A Planning Application For:
1095 E. El Camino Real
Sunnyvale, CA

The **SOBRATO** organization

DATE	DESCRIPTION
03.15.13	PLANNING SUBMITTAL
05.15.13	PLANNING SUBMITTAL
07.19.13	PRELIMINARY - SOMEWHAT TENANT COORDINATION
09.24.13	4TH SUBMITTAL - OWNER COORD.

EXTERIOR ELEVATIONS

A3.02

PROJECT NO: 133383

P:\2013 Jobs\133383-1095 W El Camino\PA\133383-PA_A202.dwg - Wed, Feb 26, 2014 - 11:27am - cathrig

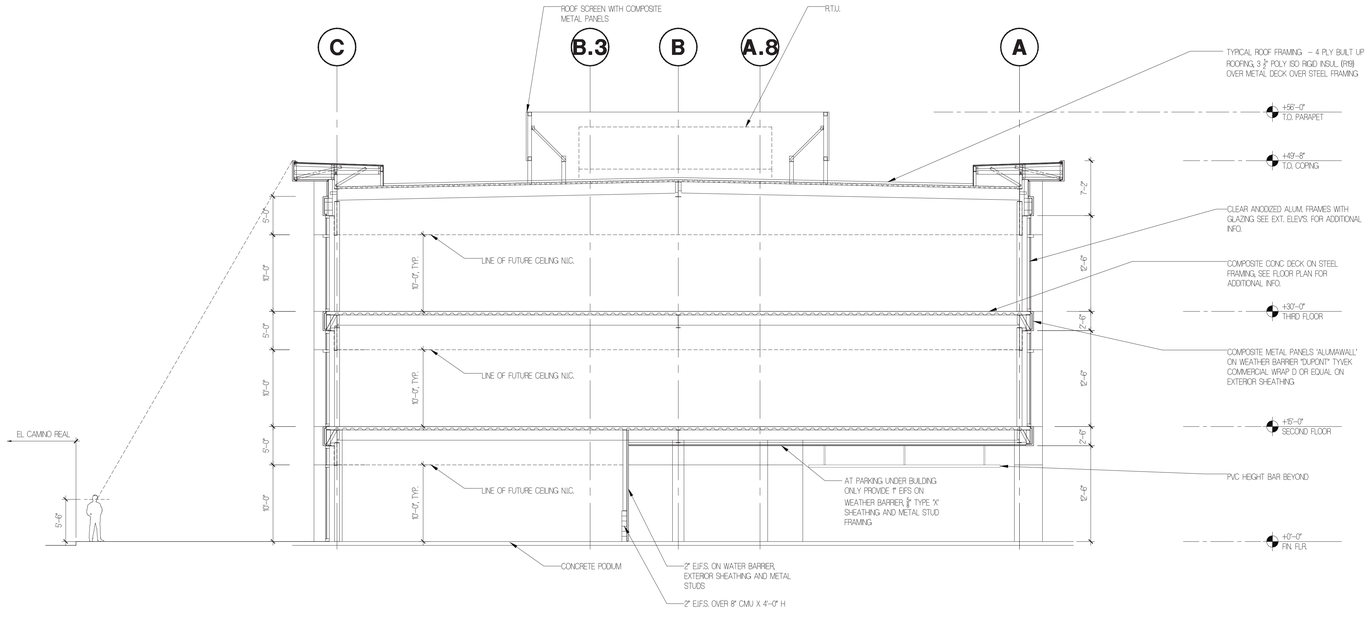

10 TRANSVERSE SECTION

SCALE: 1/8" = 1'-0"

11 FIN COLUMN

SCALE: 1 1/2" = 1'-0"

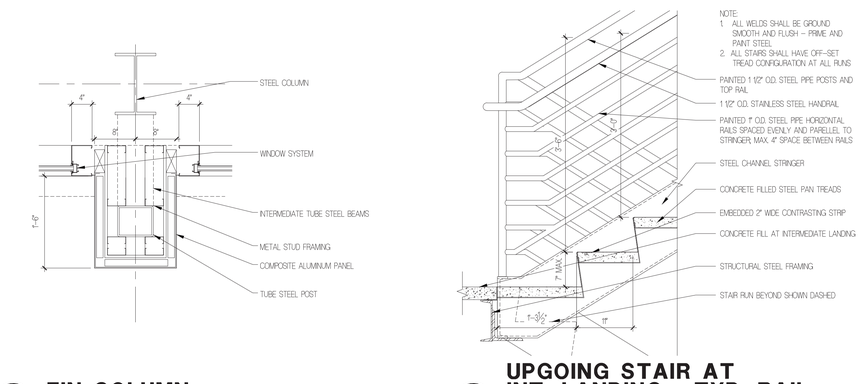

7 UPGOING STAIR AT INT. LANDING - TYP. RAIL

SCALE: 1"=1'-0"

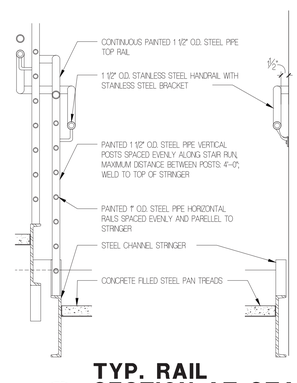

3 TYP. RAIL SECTION AT STAIR

SCALE: 1" = 1'-0"

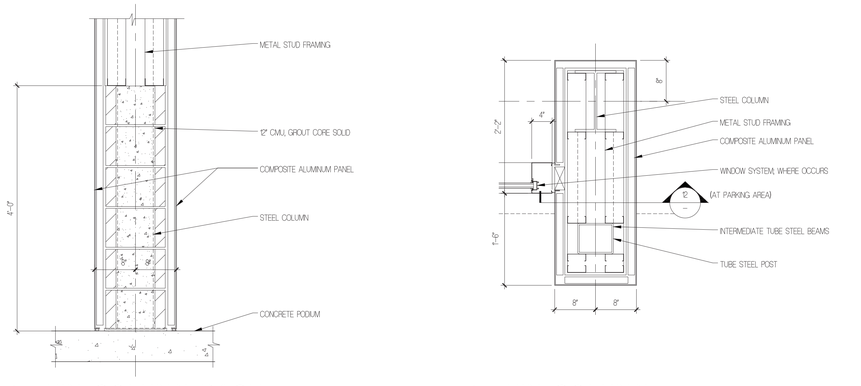

12 FIN COLUMN BASE

SCALE: 1 1/2" = 1'-0"

8 FIN COLUMN

SCALE: 1 1/2" = 1'-0"

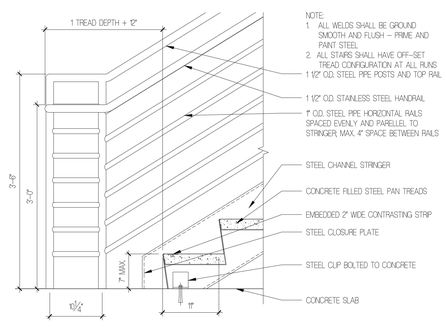

4 BOTTOM OF STAIR TYP. RAIL

SCALE: 1" = 1'-0"

ARC TEC
ARCHITECTURAL TECHNOLOGIES
www.arctecinc.com
Arizona
2960 East Northern Avenue, Building C
Phoenix, Arizona 85028
P 602.953.2355 F 602.953.2988
California
99 Almaden Boulevard, Suite 840
San Jose, California 95113
P 408.496.0676 F 408.496.1121

The "user(s)" in possession of this documentation acknowledge(s) that ARC TEC's and ARC TEC consultants' drawings, specifications, reports, electronic data and other documentation are instruments of service. ARC TEC and ARC TEC consultants shall be deemed the author and owner of such documentation. The "user(s)" in possession of this documentation shall not sue or authorize any other person to use ARC TEC's or ARC TEC consultants' instruments of service for any purpose not agreed to in writing by ARC TEC and at the user(s) sole risk and without liability to ARC TEC and ARC TEC's consultants. The user(s) possessing this documentation shall indemnify and hold harmless ARC TEC and ARC TEC's consultants and agents and employees from and against all claims, damages losses and expenses, including but not limited to attorneys' fees, arising out of unauthorized reuse of ARC TEC or ARC TEC's consultants instruments of service.
Written dimensions on this drawing shall have precedence over any scaled dimension. DO NOT SCALE THIS DRAWING for accurate dimensions and notify ARC TEC of any discrepancies.

© Copyright ARC TEC, Inc. 2013

In Association with:

A Planning Application For:
1095 E. El Camino Real
Sunnyvale, CA

The **SOBRATO** organization

DATE	DESCRIPTION
03.15.13	PLANNING SUBMITTAL
05.15.13	PLANNING SUBMITTAL
07.19.13	PRELIMINARY - SCHEMATIC TENANT COORDINATION
09.24.13	4TH SUBMITTAL - OWNER COORD.

BUILDING SECTION AND DETAILS

A4.01

PROJECT NO: 133383

ATTACHMENT F
PAGE 63 of 76

P:\2013 Jobs\133383.SOB.1095 W El Camino\ARC\133383_ARC.dwg - Aug 26, 2013, 11:27am - jeffrig

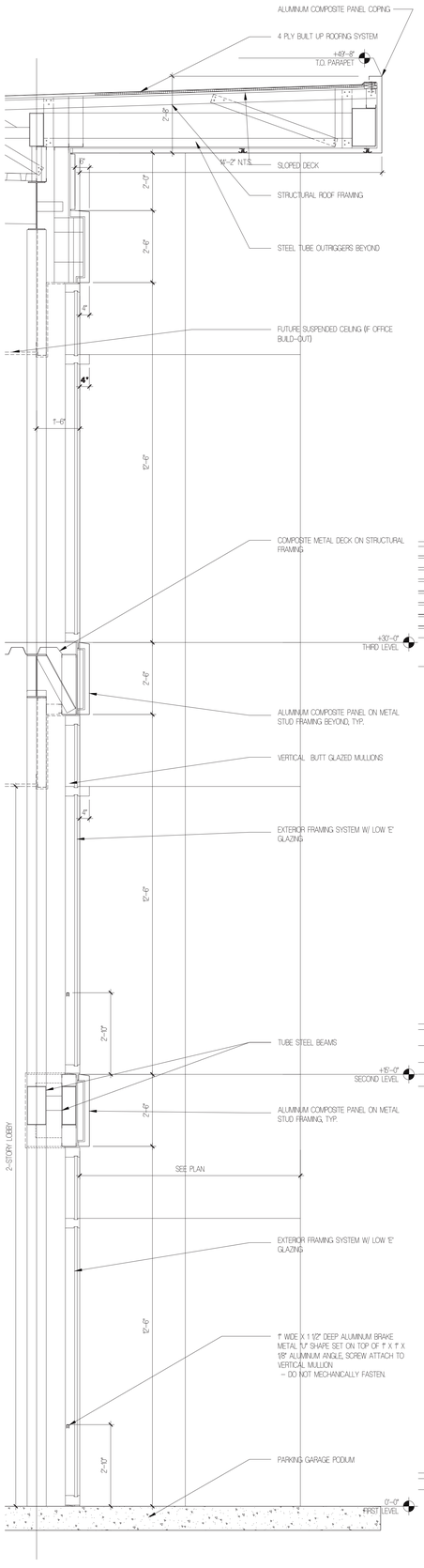

20 **WALL SECTION**
SCALE: 1/2" = 1'-0"

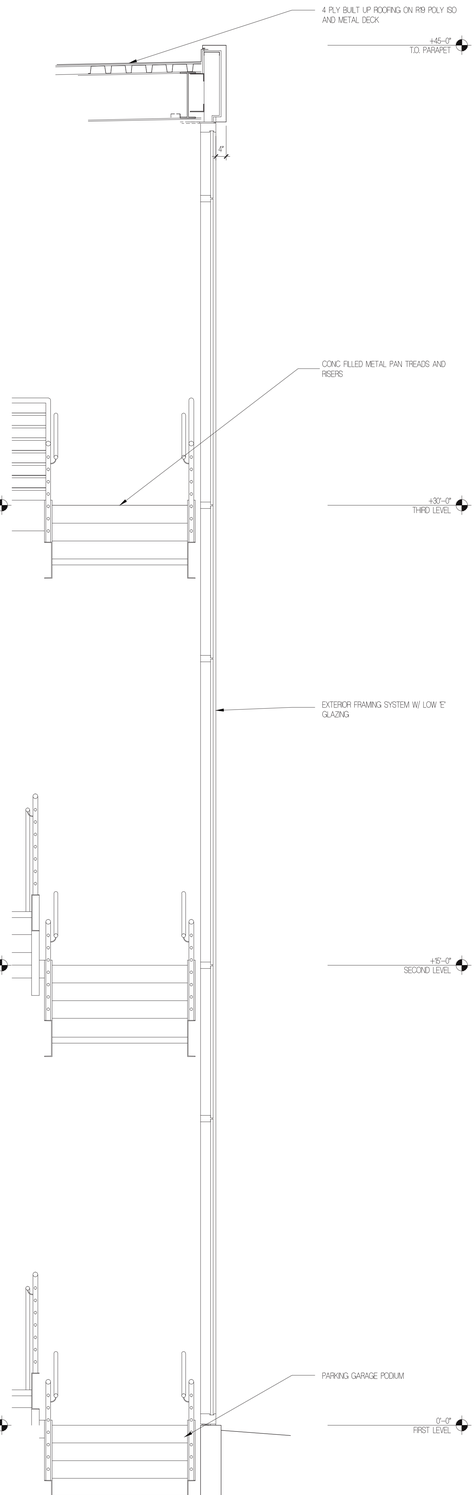

16 **WALL SECTION - STAIR**
SCALE: 1/2" = 1'-0"

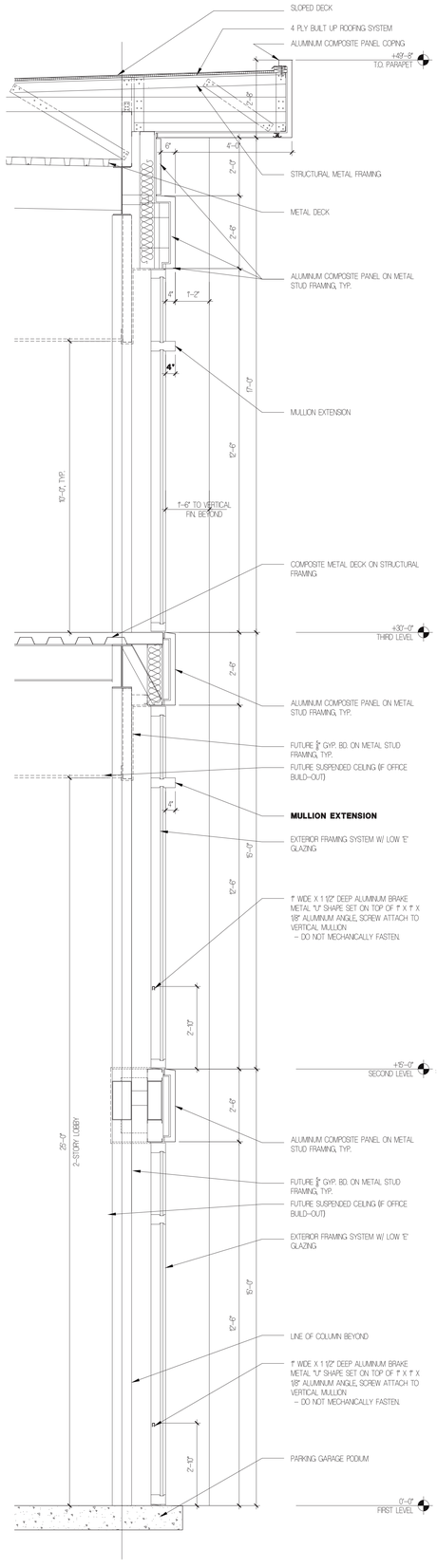

12 **WALL SECTION**
SCALE: 1/2" = 1'-0"

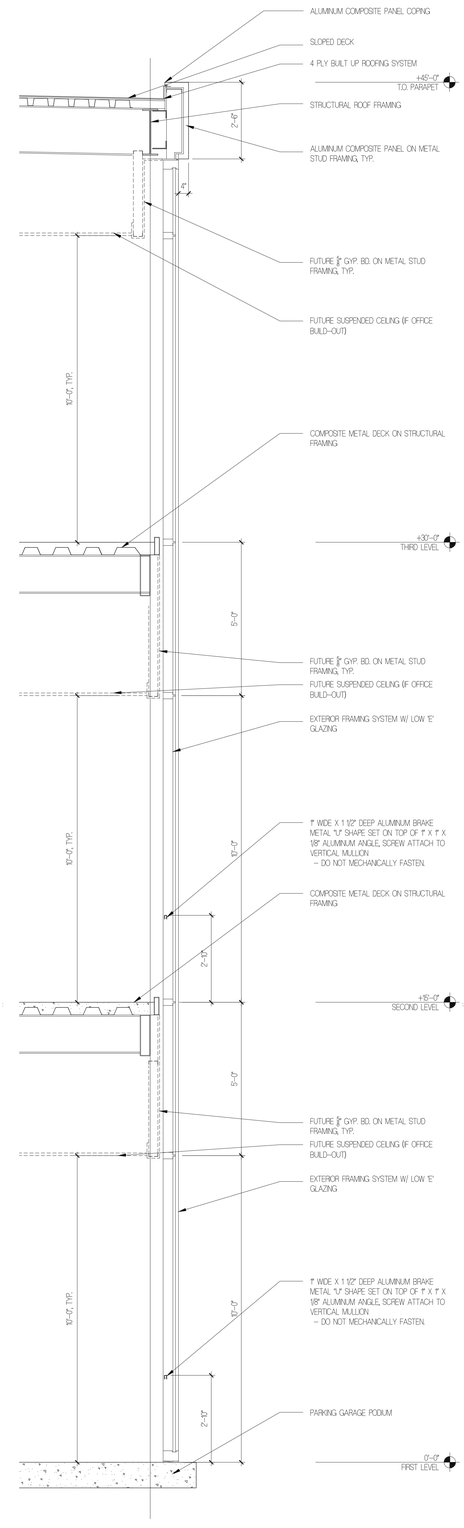

8 **WALL SECTION**
SCALE: 1/2" = 1'-0"

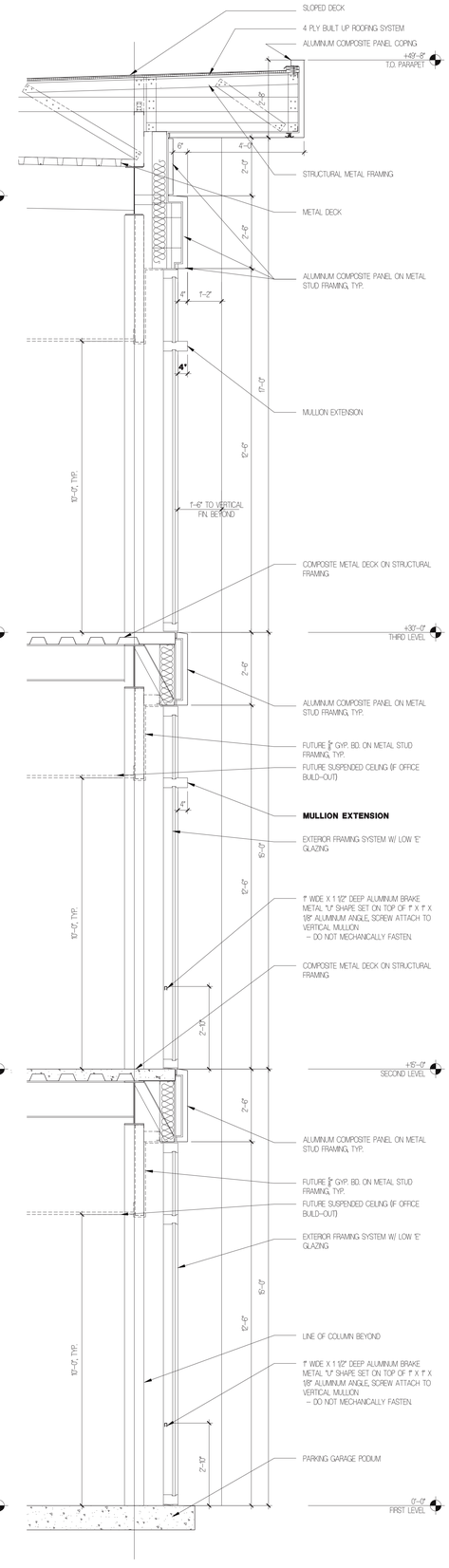

4 **WALL SECTION**
SCALE: 1/2" = 1'-0"

ARC TEC
ARCHITECTURAL TECHNOLOGIES
www.arctecinc.com
Arizona
2960 East Northern Avenue, Building C
Phoenix, Arizona 85028
P 602.953.2355 F 602.953.2988
California
99 Almaden Boulevard, Suite 840
San Jose, California 95113
P 408.496.0676 F 408.496.1121

The "user(s)" in possession of this documentation acknowledge(s) that ARC TEC's and ARC TEC consultants' drawings, specifications, reports, electronic data and other documentation are instruments of service. ARC TEC and ARC TEC consultants shall be deemed the author and owner of such documentation. The "user(s)" in possession of this documentation shall not sue or authorize any other person to use ARC TEC's or ARC TEC consultants' instruments of service for any purpose not agreed to in writing by ARC TEC and at the user(s) sole risk and without liability to ARC TEC and ARC TEC's consultants. The user(s) possessing this documentation shall indemnify and hold harmless ARC TEC and ARC TEC's consultants and agents and employees from and against all claims, damages losses and expenses, including but not limited to attorneys' fees, arising out of unauthorized reuse of ARC TEC or ARC TEC's consultants instruments of service.
Written dimensions on this drawing shall have precedence over any scaled dimension. DO NOT SCALE THIS DRAWING for accurate dimensions and notify ARC TEC of any discrepancies.

© Copyright ARC TEC, Inc. 2013

In Association with:

A Planning Application For:
1095 E. El Camino Real
Sunnyvale, CA

The **SOBRATO** organization

DATE	DESCRIPTION
03.15.13	PLANNING SUBMITTAL
05.15.13	PLANNING SUBMITTAL
07.19.13	PRELIMINARY - SCHEMATIC, TENANT COORDINATION
09.24.13	4TH SUBMITTAL - OWNER COORD.

WALL SECTIONS

A4.02

PROJECT NO: 133383

VESTING TENTATIVE MAP

A ONE LOT SUBDIVISION
FOR CONDOMINIUM PURPOSES
1095 WEST EL CAMINO REAL

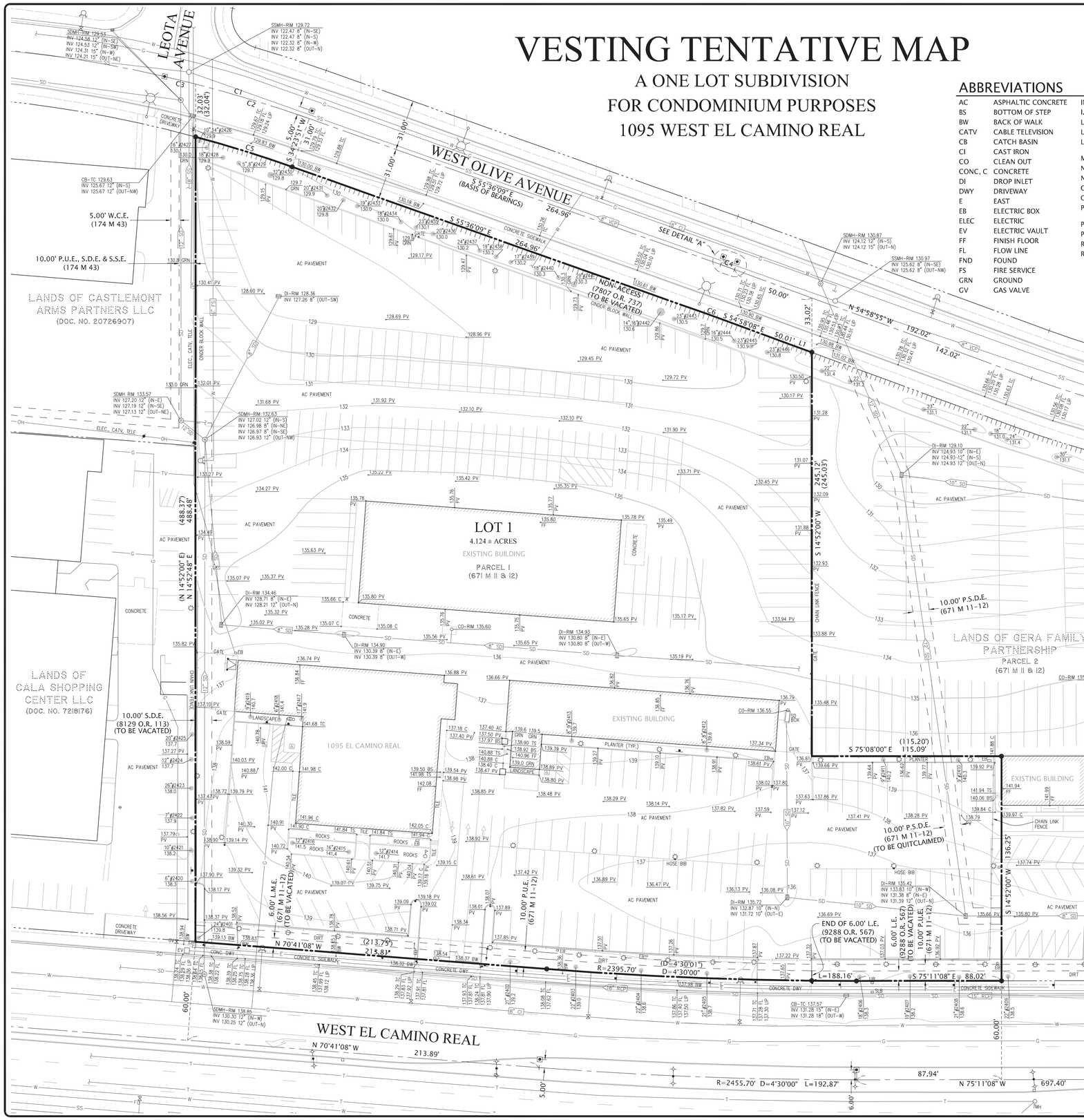

SHEET INDEX

EXISTING CONDITIONS	1
PROPOSED CONDITIONS	2
GRADING SECTIONS	3

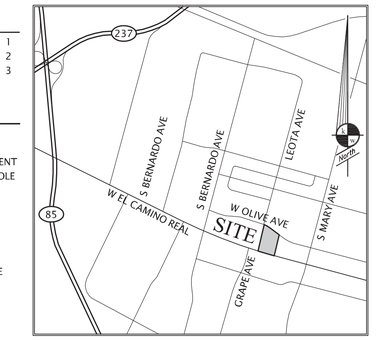

VICINITY MAP
NOT TO SCALE

ABBREVIATIONS

AC	ASPHALTIC CONCRETE	INV	INVERT ELEVATION	S	SOUTH
BS	BOTTOM OF STEP	I.P.	IRON PIPE	SD	STORM DRAIN
BW	BACK OF WALK	L.E.	LANDSCAPE EASEMENT	S.D.E.	STORM DRAIN EASEMENT
CATV	CABLE TELEVISION	LIP	LIP OF GUTTER	SDMH	STORM DRAIN MANHOLE
CB	CATCH BASIN	L.M.E.	LANDSCAPE MAINTENANCE EASEMENT	SLB	STREET LIGHT BOX
CI	CAST IRON	MON	MONUMENT	SS	SANITARY SEWER
CO	CLEAN OUT	N	NORTH	SSMH	SANITARY SEWER MANHOLE
CONC, C	CONCRETE	NO.	NUMBER	TC	TOP OF CURB
DI	DROP INLET	OH	OVERHEAD	TELE	TELEPHONE
DWY	DRIVEWAY	O.R.	OFFICIAL RECORD	TMH	TELEPHONE MANHOLE
E	EAST	P.S.D.E.	PRIVATE STORM DRAIN EASEMENT	TS	TOP OF STEP
EB	ELECTRIC BOX	P.U.E.	PUBLIC UTILITY EASEMENT	TYP.	TYPICAL
ELEC	ELECTRIC	PV	PAVEMENT	UB	UTILITY BOX
EV	ELECTRIC VAULT	RCP	REINFORCED CONCRETE PIPE	VCP	VITRIFIED CLAY PIPE
FF	FINISH FLOOR	RIM	RIM ELEVATION	W	WEST
FL	FLOW LINE			W/	WITH
FND	FOUND				
FS	FIRE SERVICE				
GRN	GROUND				
GV	GAS VALVE				

LEGEND

PROPERTY LINE
ADJACENT PROPERTY LINE
CENTERLINE
NON-ACCESS
EASEMENT
BUILDING LINE
BUILDING OVERHANG
FOUND MONUMENT AS NOTED
FOUND IRON PIPE OR AS NOTED
LIGHT
STREET LIGHT
TRANSFORMER
FIRE HYDRANT
STORM DRAIN MANHOLE
MANHOLE
CLEAN OUT
GAS METER
UTILITY POLE W/ GUY WIRE
VALVE
CATCH BASIN / DROP INLET
WATER METER
BACK FLOW PREVENTER
UTILITY BOX (SIZE VARIES)
SIGN
BOLLARD
FLAG POLE
TREE W/ SIZE AND ELEVATION (10" / 100.0 / 100.00)
SPOT ELEVATION
CONTOUR
INDEX CONTOUR (15)
CURB
CURB & GUTTER
CONCRETE
FENCE
RETAINING WALL
EDGE OF PAVEMENT
SANITARY SEWER (SS)
STORM DRAIN (SD)
WATER (W)
GAS (G)
UNDERGROUND ELECTRIC (E)
TELEPHONE (T)
OVERHEAD (OH)
FIBER OPTIC CABLE (FO)
CABLE TV (TV)
RECORD INFORMATION ( )

NOTES

1. RECORD OWNERS: SOBRATO INTERESTS 2
   10600 N. DE ANZA BOULEVARD, SUITE 200
   CUPERTINO, CA 95014
   PHONE: (408) 446-0700
   CONTACT: TIM STEELE
2. SUBDIVIDER: THE SOBRATO ORGANIZATION
   10600 N. DE ANZA BOULEVARD, SUITE 200
   CUPERTINO, CA 95014
   PHONE: (408) 446-0700
   CONTACT: TIM STEELE
3. MAP PREPARED BY: KIER & WRIGHT CIVIL ENGINEERS & SURVEYORS, INC.
   3350 SCOTT BOULEVARD, BUILDING 22
   SANTA CLARA, CA 95054
   PHONE: (408) 727-6665
   CONTACT: RYAN M. AMAYA, LS 8134
4. A.P.N.'S 161-41-008
5. EXISTING USE: COMMERCIAL
6. PROPOSED USE: MIXED USE
7. EXISTING ZONING: C2-ECR, HIGHWAY BUSINESS-EL CAMINO REAL
8. PROPOSED ZONING: NO CHANGE
9. GENERAL PLAN: HIGHWAY COMMERCIAL, SPECIFIC PLAN
10. PROPOSED NUMBER OF LOTS: 1
11. TOTAL ACREAGE: 4.124 ± ACRES
12. MAXIMUM UNITS:
    MIXED-USE PROJECT WITH 156 RESIDENTIAL CONDOMINIUMS IN A FOUR-STORY BUILDING AND 1 COMMERCIAL PARCEL INCLUDING A THREE-STORY OFFICE BUILDING.
13. ALL DISTANCES ARE APPROXIMATE.
14. NO NEW STREET NAMES PROPOSED.
15. THIS TENTATIVE MAP WAS PREPARED FROM INFORMATION FURNISHED IN A PRELIMINARY TITLE REPORT PREPARED BY FIRST AMERICAN TITLE INSURANCE COMPANY ORDER NUMBER NCS-582612-SC, DATED DECEMBER 11, 2012.
16. FLOOD ZONE NOTE:
    THE SUBJECT PROPERTY IS SHOWN ON THE FEDERAL EMERGENCY MANAGEMENT AGENCY FLOOD INSURANCE RATE MAP, COMMUNITY PANEL NUMBER 060352 0206 H, DATED MAY 18, 2009 AS BEING LOCATED IN FLOOD ZONE "X";

    AREAS OF 0.2% ANNUAL CHANCE FLOOD; AREAS OF 1% ANNUAL CHANCE FLOOD WITH AVERAGE DEPTHS OF LESS THAN 1 FOOT OR WITH DRAINAGE AREAS LESS THAN 1 SQUARE MILE; AND AREAS PROTECTED BY LEVEES FROM 1% ANNUAL CHANCE FLOOD.
17. BENCHMARK :
    BM-71; FOUND BRASS DISK ON TOP OF CURB NEXT TO A WHEEL CHAIR RAMP AT THE NORTHEAST CURB RETURN, INTERSECTION OF EL CAMINO REAL AND MARY AVENUE.
    ELEVATION: 133.13 (NGVD 29 DATUM)
18. BASIS OF BEARINGS:
    THE BEARING OF SOUTH 55°36'09" EAST TAKEN ON THE CENTERLINE OF WEST OLIVE AVENUE AS SHOWN ON THAT CERTAIN PARCEL MAP FILED FOR RECORD ON NOVEMBER 3, 1995 IN BOOK 671 OF MAPS AT PAGE 11 & 12, SANTA CLARA COUNTY RECORDS, WAS TAKEN AS THE BASIS OF ALL BEARINGS SHOWN HEREON.

LINE TABLE

LINE	BEARING	DISTANCE
L1	S 54°58'55" E	11.38'

CURVE TABLE

CURVE	RADIUS	DELTA	LENGTH
C1	800.00'	6°32'50"	91.42'
C2	800.00'	5°09'49" (5°09'44")	72.10' (72.08')
C3	800.00'	1°23'05"	19.33'
C4	800.00'	0°38'00" (0°38'01")	8.85' (8.84')
C5	769.00'	4°34'26" (4°34'11")	61.39' (61.33')
C6	769.00'	0°38'01"	8.50'

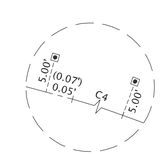

DETAIL "A"
NOT TO SCALE

EXISTING CONDITIONS

No.	REVISION	BY
A	REVISED PER CITY COMMENTS - 10/31/13	EK

KIER & WRIGHT
CIVIL ENGINEERS & SURVEYORS, INC.
3350 Scott Boulevard, Building 22 • (408) 727 6665
Santa Clara, California 95054 • (408) 727 5641

VESTING TENTATIVE MAP
FOR: THE SOBRATO ORGANIZATION
1095 WEST EL CAMINO REAL
SUNNYVALE CALIFORNIA

ATTACHMENT F
PAGE 65 of 76

DATE	JUNE, 2013
SCALE	1" = 30'
DESIGNER	RMA
DRAFTER	EK
JOB	A06046-4
SHEET	1 OF 3 SHEETS

USER: ekamikawa I:\PROJECTS\A06046-4\DWG\PLANNING\TMAP\C-TMAP-SHEET 1.dwg OCTOBER 31, 2013 2:55 PM