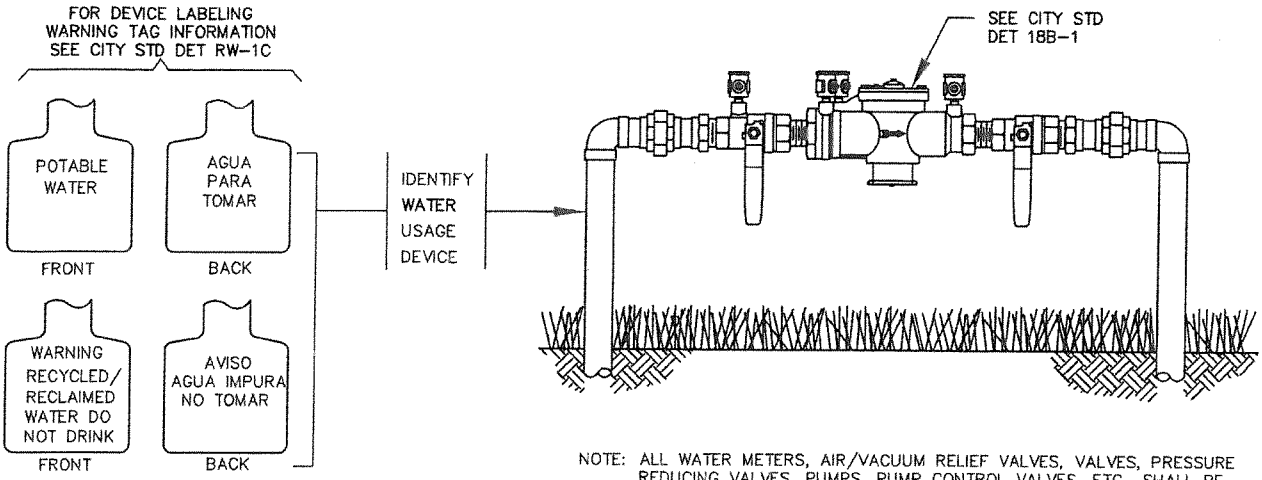

NOTE: ALL WATER METERS, AIR/VACUUM RELIEF VALVES, VALVES, PRESSURE REDUCING VALVES, PUMPS, PUMP CONTROL VALVES, ETC., SHALL BE TAGGED OR LABELED INDICATING WHETHER THE DEVICES ARE ON RECYCLED WATER OR POTABLE WATER SYSTEM.

WATER CONTROL DEVICE DETAIL

NOT TO SCALE

IRRIGATION VALVE BOX NOTES:

1. FOR NEW INSTALLATIONS, INSTALL CARSON PURPLE IRRIGATION VALVE BOXES (OR EQUAL) THAT ARE USED FOR RECYCLED WATER APPLICATIONS. BOXES SHALL BE IMPRINTED WITH THE INFORMATION THAT IS SHOWN ON THE VALVE BOX NAMEPLATE. SEE RIGHT --->

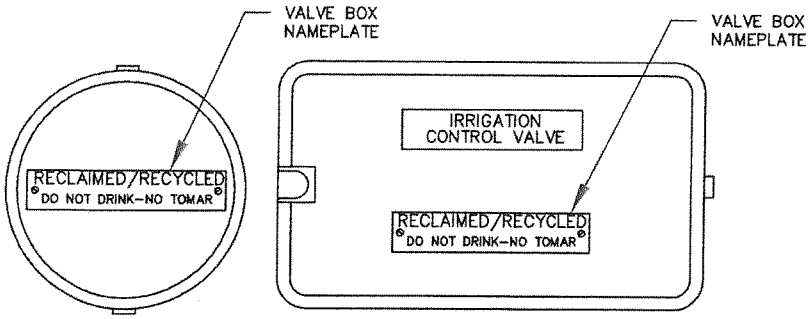

VALVE BOX NAMEPLATE INFO: T. CHRISTY ENTERPRISES, INC. CATALOG P/S: 3800 (OR APPROVED EQUAL).

IRRIGATION BOX COVERS/LIDS DETAIL

NOT TO SCALE

RECYCLED WATER LABELS - 1	APPROVED BY:	
	DATE : DEC 2014 REVISED : –	DWG. **RW-1A**

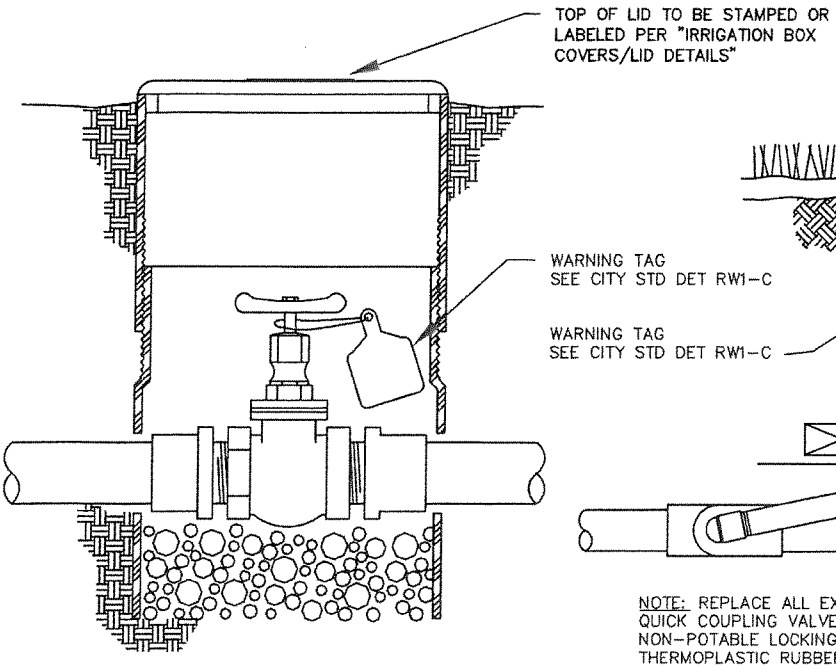

GATE VALVE DETAIL

NOT TO SCALE

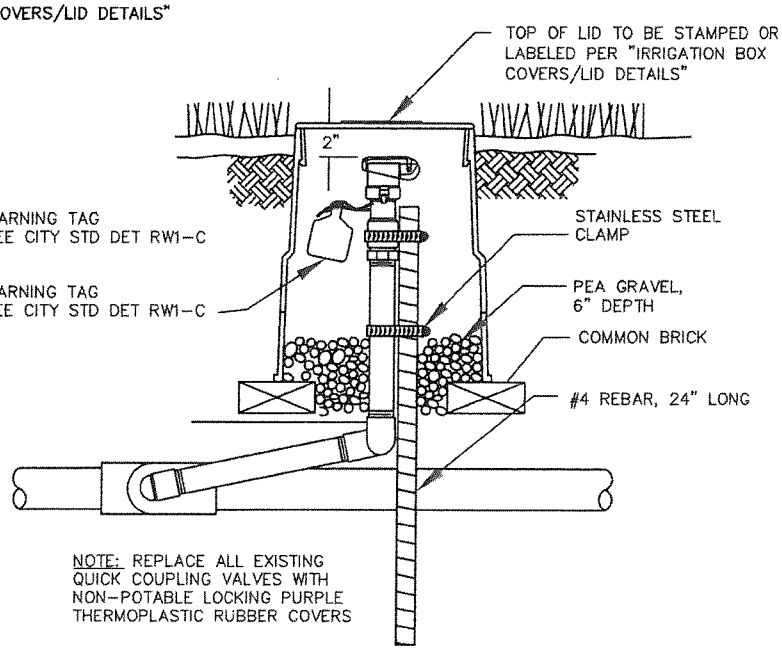

QUICK COUPLING VALVE DETAIL

NOT TO SCALE

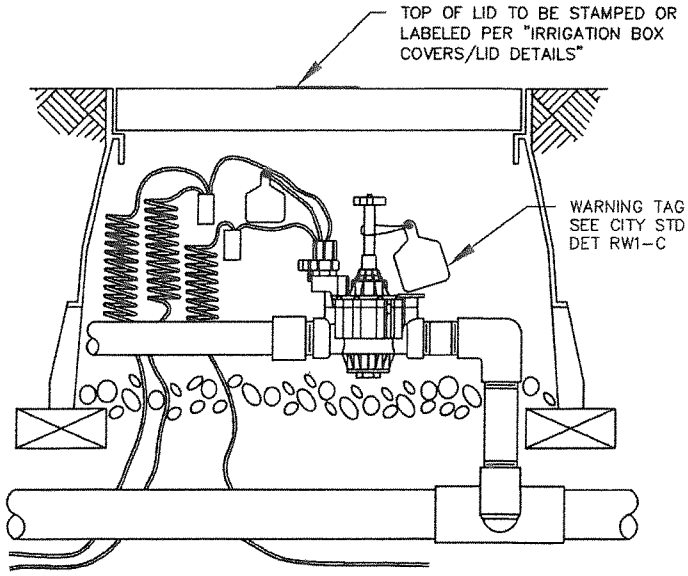

REMOTE CONTROL VALVE DETAIL

NOT TO SCALE

RECYCLED WATER LABELS - 2	APPROVED BY:	
	DATE : DEC 2014 **REVISED : -**	DWG. **RW-1B**

RECYCLED WATER

RECYCLED WATER COLOR: PURPLE

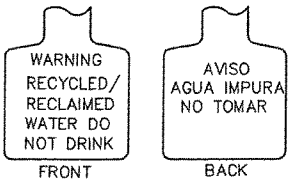

SAMPLE WARNING TAG. BACKGROUND PURPLE (PANTONE 512) WITH BLACK LETTERING.

NOTE: T CHRISTY ENTERPRISES INC.
P/N: ID-MAX-P2-RC006 (OR APPROVED EQUAL)

POTABLE WATER

DRINKING WATER COLOR: BLUE

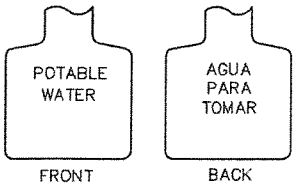

NOTE: T CHRISTY ENTERPRISES INC.
P/N: ID-MAX-B1-PW014 (OR APPROVED EQUAL)

WARNING TAG INFORMATION

NOT TO SCALE

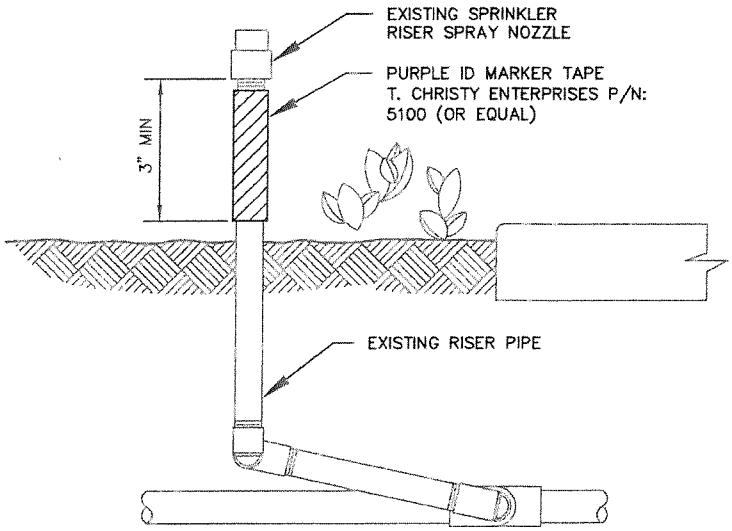

RECYCLED WATER RISER MARKER DETAIL

NOT TO SCALE

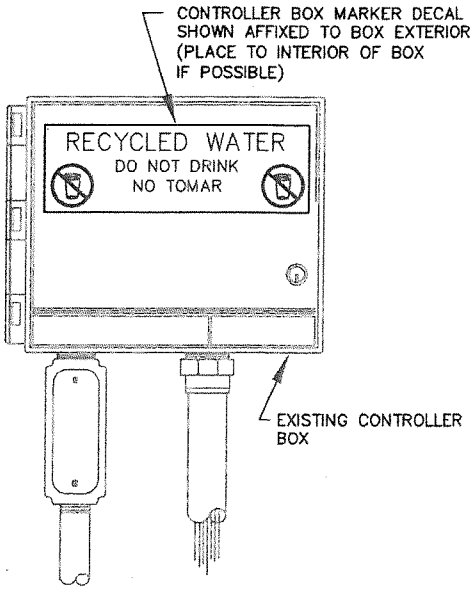

NOTE: T CHRISTY ENTERPRISES, INC.
CATALOG P/N: 4100 (OR APPROVED EQUAL)

CONTROLLER BOX MARKER DETAIL

NOT TO SCALE

RECYCLED WATER LABELS - 3	APPROVED BY:	
	DATE : DEC 2014 **REVISED : –**	DWG. **RW-1C**

SITUATION

CRITERIA

PARALLEL

CASE 1

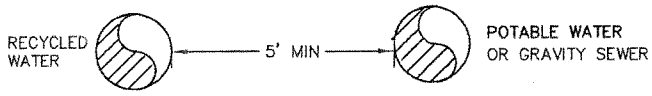

* NO JOINT CONTROL FOR STEEL, DIP, AND PVC

CROSSING #1

CASE 2A
SEE RW-2B

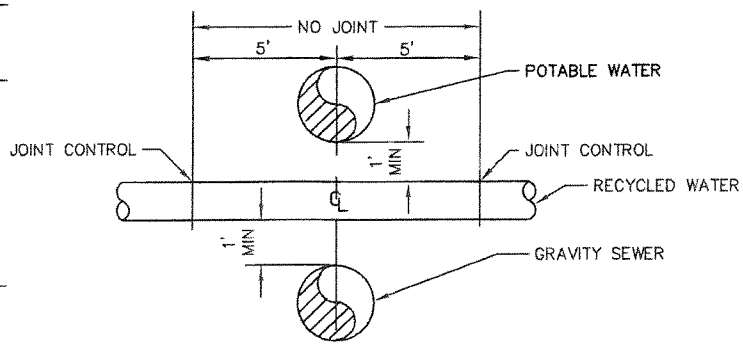

* JOINT CONTROL FOR STEEL, DIP, AND PVC
* RECYCLED WATER PIPELINE SHOULD BE BELOW POTABLE PIPELINES AND ABOVE STORM AND SANITARY SEWER PIPELINES.

CROSSING #2

CASE 2B
SEE RW-2B

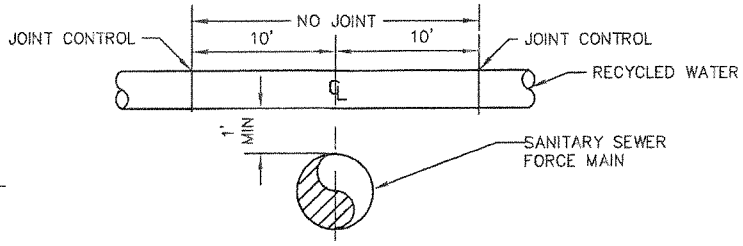

* NO PVC
* STEEL WITH DOUBLE WELDED JOINTS
* DIP WITH MECHANICAL RESTRAINT JOINTS
* LOCATE JOINTS MIN. 10' FROM THE CROSSING

CROSSING #3

CASE 2C
SEE RW-2B

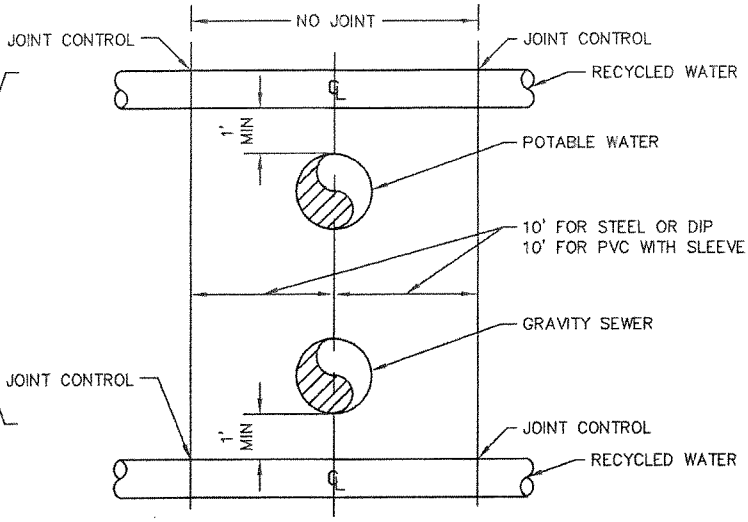

* STEEL WITH DOUBLE WELDED JOINTS
* DIP WITH MECHANICAL RESTRAINT JOINTS
* LOCATE JOINTS MIN. 10' FROM THE CROSSING (STEEL & DIP)
* PVC PIPE WITH JOINT RESTRAINT AND REQUIRED CONTINUOUSLY SLEEVED FOR 20' FROM THE CROSSING

PIPE CLEARANCE REQUIREMENT DETAILS

NOT TO SCALE

RECYCLED WATER SEPARATION REQUIREMENTS - 1	APPROVED BY:	
	DATE : DEC 2014 REVISED : –	DWG. **RW-2A**

BASIC SEPARATION STANDARDS:

CASE 1. PARALLEL CONSTRUCTION

WHEN RECYCLED WATER MAINS ARE AT LEAST 5 FEET (MEASURED FROM EDGE OF PIPE-TO-EDGE OF PIPE) FROM POTABLE WATER AND/OR SANITARY SEWER MAINS OR STORM DRAINS, RECYCLED WATER MAIN CAN BE INSTALLED WITH STEEL PIPE (SP), DUCTILE IRON (DIP), AND PLASTIC PIPE (PVC) WITHOUT JOINT CONTROL. WHEN LOCATED NEAR A SEWER FORCE MAIN, RECYCLED WATER MAIN IS TO BE CONSTRUCTED MAINTAINING THE 10 FEET MINIMUM SEPARATION REQUIREMENT AND ONLY SP AND DIP ARE ACCEPTABLE MATERIALS (SEE PARALLEL DETAIL ON CITY STD DETAIL RW-2A).

CASE 2. CROSSING CONSTRUCTION

2A. (SEE CROSSING #1 DETAIL ON CITY STD DETAIL RW-2A) AT CROSSING WHERE RECYCLED WATER MAINS ARE TO BE CONSTRUCTED. MAINTAIN 1 FOOT MINIMUM VERTICAL CLEARANCE (MEASURED FROM EDGE-OF-PIPE TO EDGE-OF-PIPE) FROM ANY UNDERGROUND UTILITIES, INCLUDING POTABLE WATER LINES, SANITARY SEWERS, STORM DRAINS, GAS LINES, ELECTRICAL DUCTBANKS, ETC. WHEN RECYCLED WATER MAINS ARE 1 FOOT BELOW THE POTABLE WATER MAINS AND/OR 1 FOOT ABOVE THE SANITARY SEWER MAINS, THE PIPE JOINTS MUST BE LOCATED AT LEAST 5 FEET FROM THE EXISTING PIPE (MEASURED FROM CENTERLINE OF EXISTING PIPE TO THE JOINT). SP, DIP, AND PVC ARE ALL ACCEPTABLE PIPE MATERIALS.

2B. (SEE CROSSING #2 DETAIL ON CITY STD DETAIL RW-2A) WHEN CROSSING A SANITARY SEWER FORCE MAIN, THE RECYCLED WATER MAIN MUST BE LOCATED AT LEAST 1 FOOT ABOVE THE EXISTING FORCE MAIN. ONLY SP WITH DOUBLE WELDED JOINTS AND DIP WITH MECHANICALLY RESTRAINED JOINTS ARE ACCEPTABLE. RECYCLED WATER PIPE JOINTS MUST BE LOCATED AT LEAST 10 FEET FROM THE CENTERLINE OF EXISTING SANITARY SEWERS FORCE MAIN.

2C. (SEE CROSSING #3 DETAIL ON CITY STD DETAIL RW-2A) WHEN THE RECYCLED WATER MAINS ARE 1 FEET ABOVE THE POTABLE WATER LINES AND/OR 1 FOOT BELOW THE SANITARY SEWER MAINS, SP SHALL BE CONSTRUCTED WITH DOUBLE WELDED JOINTS, DIP USED SHALL HAVE MECHANICAL RESTRAINED JOINTS. BOTH SP AND DIP JOINTS MUST BE LOCATED AT LEAST 10 FEET FROM THE CENTERLINE OF EXISTING SANITARY SEWERS AND/OR EXISTING WATER LINES. IF PVC IS USED FOR RECYCLED WATER PIPELINE AT CROSSING, IN ADDITION TO THE JOINT THRUST RESTRAINT DEVICES, A CONTINUOUS SLEEVE FOR A DISTANCE OF 10 FEET ON EITHER SIDE OF CROSSING SHALL BE INSTALLED.

GENERAL NOTES

1. ALL SP USED FOR PIPING SHALL MEET A MINIMUM INTERNAL PRESSURE OF 200 PSI. NO MINIMUM PIPE WALL THICKNESS REQUIRED. (PIPE WALL THICKNESS SHALL BE CHOSEN BASED ON THE INTERNAL PRESSURES AND EXTERNAL LOADS EXERTED ON THE PIPE, THE MOST CONSERVATIVE DESIGN FOR PIPE WALL THICKNESS MUST BE SPECIFIED).

2. DIP USED FOR PIPING, THE STANDARD PIPE WALL THICKNESS SHALL BE DETERMINED BY THE STANDARD PIPELINE DESIGN, THERE IS NO MINIMUM INTERNAL PRESSURE REQUIREMENT.

3. PVC USED FOR PIPING, A DIMENSION RATIO (DR) OF 14 AND PRESSURE CLASS OF 200 MUST BE SPECIFIED. ALSO REFER TO AWWA C900 REQUIREMENTS.

4. PROPER CORROSION PROTECTION TO PIPELINES IS REQUIRED WHICH INCLUDES BUT IS NOT LIMITED TO OUTSIDE COATING, INSIDE LINING, DIELECTRIC TREATMENT, AND OTHER CATHODIC PROTECTION.

5. ANY EXCEPTIONS TO THE REQUIREMENTS OF THIS DETAIL REQUIRE A SPECIAL REVIEW AND APPROVAL SHALL BE GRANTED BY THE CALIFORNIA DEPARTMENT OF PUBLIC HEALTH.

RECYCLED WATER SEPARATION REQUIREMENTS - 2	APPROVED BY:	
	DATE : DEC 2014 REVISED : -	DWG. **RW-2B**

IRRIGATION SYSTEM NOTES:

1. ALL WORK SHALL CONFORM TO EXISTING REGULATIONS INCLUDING, BUT NOT LIMITED TO:
   1.1. CITY OF SUNNYVALE RECYCLED WATER PROGRAM SITE DESIGN REQUIREMENTS (PROVIDED BY THE ENVIRONMENTAL SERVICES DEPARTMENT).
   1.2. CA DEPARTMENT OF PUBLIC HEALTH REGULATIONS, INCLUDING TITLES 17 AND 22.

2. CHANGES MADE TO THE APPROVED IRRIGATION PLANS SHALL BE SUBMITTED TO THE CITY CROSS CONNECTION SPECIALIST FOR REVIEW AND APPROVAL AT LEAST FOUR WEEKS PRIOR TO START OF CONSTRUCTION.

3. AT LEAST FIVE WORKING DAYS PRIOR TO START OF CONSTRUCTION, THE CONTRACTOR, CUSTOMER, AND CITY CROSS CONNECTION SPECIALIST SHALL HOLD A PRE-CONSTRUCTION MEETING.

4. CONTRACTOR SHALL NOTIFY CITY OF SUNNYVALE, ENVIRONMENTAL SERVICES DEPARTMENT – RECLAIMED WATER USE SECTION AT TELEPHONE NUMBER (408) 730-7900 AND CUSTOMER A MINIMUM OF AT LEAST 2 WEEKS BEFORE WORK BEGINS. THE CONTRACTOR SHALL ALSO NOTIFY ENVIRONMENTAL SERVICES AND CUSTOMER AGAIN AT LEAST 48 HOURS IN WRI5RING BEFORE STARTING ANY ONSITE WORK. CITY INSPECTOR MUST INSPECT AND/OR VERIFY:
   4.1. PRESENCE OF BACKFLOW PREVENTION AT ALL POTABLE POINTS OF CONNECTION.
   4.2. NEW UNDERGROUND PIPING (LABELING, CLEARANCES, BURIAL DEPTH, SLEEVING).
   4.3. PRESSURE TEST.
   4.4. INSTALLATION OF SIGNS, TAGS, LABELS, AND CONTROLLER DECALS.
   4.5. SITE PASSED A CROSS-CONNECTION TEST PERFORMED BY A CERTIFIED AWWA CROSS-CONNECTION SPECIALIST.
   4.6. NEW METER INSTALLATION.
   4.7. COVERAGE TEST.

5. AT NO TIME SHALL CROSS-CONNECTION FROM POTABLE WATER TO RECYCLED WATER BE PERMITTED.

6. ALL NEW ON-SITE BURIED RECYCLED WATER PIPING SHALL BE IDENTIFIED BY THE FOLLOWING METHODS:
   6.1 USING PURPLE-COLORED PVC PIPE WITH CONTINUOUS WORDING "CAUTION – RECYCLED WATER" PRINTED ON OPPOSITE SIDES OF THE PIPE. PIPE SHALL BE LAID WITH WORDING FACING UPWARDS.
   6.2 WARNING TAPE WITH A MINIMUM WIDTH OF 3 INCHES READING "CAUTION – RECYCLED WATER" (IN BLACK OR WHITE LETTERING ON PURPLE BACKGROUND) SHALL RUN CONTINUOUSLY ON TOP OF PIPING AND SHALL BE ATTACHED TO PIPING WITH PLASTIC TAPE BANDED AROUND THE WARNING TAPE AND THE PIPE EVERY 5 FEET ON CENTER.

7. CONSTANT-PRESSURE MAINLINE PIPING 2 INCHES AND SMALLER SHALL BE PVC PIPE; CONSTANT PRESSURE MAINLINE PIPING 2 ½ INCHES AND LARGER SHALL BE CLASS 315; AND INTERMITTENT-PRESSURE LATERAL PIPING SHALL BE CLASS 200 OR SCHEDULE 40. COPPER PIPE SHALL BE TYPE "K".

8. ALL ON-SITE RECYCLED WATER PIPING SHALL BE BURIED TO A MINIMUM DEPTH FROM FINISHED GRADE TO TOP OF PIPE (MINIMUM COVER) OF:

8.1. PRESSURIZED LINES OF 3 INCHES AND LARGER:	24 INCHES
8.2. PRESSURIZED LINES 2 ½ INCHES AND SMALLER:	18 INCHES
8.3. INTERMITTENT-PRESSURE LINES:	12 INCHES

9. ALL RECYCLED WATER PIPING, OTHER THAN PVC PIPING WITH SOLVENT WELDED JOINTS SHALL BE PROTECTED AGAINST MOVEMENT WITH THRUST BLOCKS OR RESTRAINED JOINTS OR OTHER APPROVED METHOD.

10. MAINTAIN A 5-FOOT HORIZONTAL SEPARATION BETWEEN PRESSURIZED RECYCLED WATER IRRIGATION PIPING AND POTABLE WATER PIPING. AT PIPE CROSSINGS, RECYCLED WATER IRRIGATION WATER PIPING MUST BE 12 INCHES BELOW POTABLE WATER LINES. IF RECYCLED WATER PIPING MUST CROSS OVER POTABLE WATER LINES, THE RECYCLED WATER PIPING SHALL BE AT LEAST 12 INCHES ABOVE THE POTABLE LINES AND SHALL BE INSTALLED IN A PVC SLEEVE WHICH EXTENDS A MINIMUM OF 10 FEET ON EITHER SIDE OF THE POTABLE WATER PIPING (SEE CITY STD DET RW-02A).

11. POTABLE WATER AND RECYCLED WATER PIPING SHALL NOT BE INSTALLED IN THE SAME TRENCH.

12. ALL RECYCLED WATER SYSTEM REMOTE CONTROL VALVES, QUICK COUPLING VALVES, GATE VALVES, BLOW OFF VALVES, STRAINERS, AND PRESSURE-REGULATING VALVES SHALL BE INSTALLED BELOW GRADE IN VALVE BOXES. VALVE BOXES SHALL BE LABELED PER CITY RW-1A.

13. NO HOSE BIBS SHALL BE ALLOWED ON THE RECYCLED WATER IRRIGATION SYSTEM. EXISTING HOSE BIBS TO BE CONNECTED TO RECYCLED WATER SHALL BE REPLACED WITH QUICK COUPLING VALVES. QUICK COUPLING VALVES SHALL BE PER CITY STANDARD DETAIL RW-1B AND LABELED PER CITY STD DET RW-1A.

14. LABEL ALL POTABLE WATER METERS AND ABOVE GROUND POTABLE WATER PIPES/DEVICES (BACKFLOW PREVENTERS, HOWE BIBS, ETC.) WITHIN OUR NEAR THE RECYCLED WATER USE AREA WITH TAGS OR LABELS READING "POTABLE WATER" IN BLACK LETTERS ON BLUE BACKGROUND, PER CITY STD DET RW-1A, RW-1B, AND RW-1C.

15. ALL RECYCLED WATER IRRIGATION SYSTEMS SHALL INCLUDE THE FOLLOWING:
   15.1. A WYE STRAINER (WITH A 20 MESH OR FINER SCREEN) INSTALLED AS CLOSE AS PRACTICAL TO THE RECYCLED WATER METER BOX.
   15.2. A PRESSURE REGULATING VALVE INSTALLED IMMEDIATELY DOWNSTREAM OF THE STRAINER IF BOOSTER PUMP STATION IS NOT PRESENT.
   15.3. THESE COMPONENTS SHALL BE INSTALLED WITH ISOLATION VALVES.

16. PLACE RECYCLED WATER ADVISORY SIGNS AT ENTRANCE TO THE RECYCLED WATER USE AREA IN A MANNER THAT DOES NOT OBSTRUCT THEM FROM VIEW.

17. THE CONTRACTOR SHALL PROVIDE THE ENGINEER AND UPDATE AS NECESSARY, A CONSTRUCTION SCHEDULE THAT SHOWS THE START OF EACH CONSTRUCTION ACTIVITY, INCLUDING REQUIRED TESTS, INSPECTIONS AND INITIATION OF RECYCLED WATER SERVICE.

18. THE CONTRACTOR IS RESPONSIBLE TO COORDINATE WITH UNDERGROUND SERVICE ALERT (800) 227-2600 AND PROPERTY OWNER TO LOCATE UTILITY CROSSINGS AND TO EXCAVATE WITH CAUTION TO AVOID UTILITY DAMAGE.

19. ALL UTILITIES AND IMPROVEMENTS THAT ARE DAMAGED DURING CONSTRUCTION SHALL BE COMPLETED RESTORED TO THE SATISFACTION OF THE ENGINEER.

20. ALL REFUSE AND OTHER DEMOLISHED WORK SHALL BECOME PROPERTY OF THE CONTRACTOR AND SHALL BE LEGALLY DISPOSED OF OFF-SITE. EXCEPTION IS ANY EXISTING IRRIGATION SYSTEM BACKFLOW PREVENTER DEVICE – REUSE BACKFLOW DEVICE IS POSSIBLE AND ON THE UNIVERSITY OF SOUTHERN CALIFORNIA (USC) APPROVAL LIST. OTHERWISE CONTACT CITY TO DETERMINE IF SITE OWNER WISHES TO SALVAGE THE DEVICE AND PROVIDE TO OWNER IF REQUESTED, OTHERWISE DISPOSE.

21. CONTRACTOR IS PROHIBITED FROM DISCHARGING POLLUTANTS (OILS, GARBAGE, CHEMICALS, SEDIMENTS, SOILS, ETC.) TO THE STORM DRAIN SYSTEM.

RECYCLED WATER DESIGN DRAWING GENERAL NOTES - 1	APPROVED BY:	
	DATE : DEC 2014 **REVISED : –**	DWG. **RW-3A**

IRRIGATION SYSTEM NOTES (CONTINUED FROM RW-3A):

22. PRIOR TO TURNING OFF ANY WATER METER OR OTHER UTILITY, THE CONTRACTOR SHALL COORDINATE WITH ENGINEER TO ESTABLISH WORKING HOURS, ACCESS, AND OTHER CONSTRAINTS FOR EACH SITE. THE CONTRACTOR SHALL NOTIFY CUSTOMER AND THE ENGINEER TWO WEEKS BEFORE THE PLANNED OUTAGE AND AT LEAST THREE DAYS IN ADVANCE OF THE ACTUAL OUTAGE.

23. PRIOR TO RECEIVING RECYCLED WATER, EACH SITE MUST BE PERMITTED BY CITY OF SUNNYVALE ENVIRONMENTAL SERVICES DEPARTMENT. A PERMIT WILL BE GRANTED AFTER:
    - 23.1. CONSTRUCTION HAS BEEN COMPLETED AND INSPECTED TO SHOW CONFORMANCE TO CALIFORNIA DEPARTMENT OF PUBLIC HEALTH (CDPH) APPROVED PLANS.
    - 23.2. SITE HAS PASSED REQUIRED CROSS-CONNECTION TEST PERFORMED BY A CERTIFIED AWWA CROSS-CONNECTION SPECIALIST.
    - 23.3. A FINAL ON-SITE INSPECTION HAS BEEN CONDUCTED TO CONFIRM THAT ALL REQUIREMENTS HAVE BEEN MET.
    - 23.4. THE OWNERS OR OWNER'S REPRESENTATIVE HAS COMPLETED CITY RECYCLED WATER SITE-SUPERVISORY TRAINING. FOR TRAINING CONTACT ENVIRONMENTAL SERVICES DEPARTMENT AT (408) 730-7900.

24. ALL RECYCLED WATER METERS WILL BE IN PLACE AND LOCKED OFF, OR WILL BE SET BY THE ENVIRONMENTAL SERVICES DEPARTMENT, BEFORE CONSTRUCTION IS COMPLETED. AFTER THE SITE PASSES A CROSS-CONNECTION TEST, THE RECYCLED WATER METER WILL BE UNLOCKED BY THE ENVIRONMENTAL SERVICES STAFF.

25. NO OVERSPRAY OR RUNOFF OF RECYCLED WATER SHALL BE ALLOWED ON ANY NON-APPROVED USE AREA. UPON RECEIVING RECYCLED WATER, THE ON-SITE SPRAY MIST OR RUNOFF SHALL NOT ENTER DWELLINGS OR DESIGNATED OUTDOOR EATING AREAS. DRINKING WATER FOUNTAINS BE PROTECTED AGAINST CONTACT WITH RECYCLED WATER SPRAY, MIST, OR RUNOFF.

26. CONTRACTOR SHALL SUBMIT RECORD DRAWINGS SHOWING AS-BUILT CONDITIONS OF IRRIGATION SYSTEM AND RELATED WORK TO THE ENVIRONMENTAL SERVICES DEPARTMENT – RECYCLED WATER SECTION WITHIN 30 DAYS OF SITE RECEIVING RECYCLED WATER.

27. NO IRRIGATION WITH DISINFECTED TERTIARY RECYCLED WATER SHALL TAKE PLACE WITHIN 50 FEET OF ANY DOMESTIC WATER SUPPLY WELL UNLESS ALL OF THE FOLLOWING CONDITIONS HAVE BEEN MET:
    - 27.1. A GEOLOGICAL INVESTIGATION DEMONSTRATES THAT AN AQUITARD EXISTS AT THE WELL BETWEEN THE UPPERMOST AQUIFER BEING DRAWN FROM AND THE GROUND SURFACE.
    - 27.2. THE WELL CONTAINS AN ANNULAR SEAL THAT EXTENDS FROM THE SURFACE INTO THE AQUITARD.
    - 27.3. THE WELL IS HOUSED TO PREVENT ANY RECYCLED WATER SPRAY FROM COMING INTO CONTACT WITH THE WELLHEAD FACILITIES.
    - 27.4. THE GROUND SURFACE IMMEDIATELY AROUND THE WELLHEAD IS CONTOURED TO ALLOW SURFACE WATER TO DRAIN AWAY FROM THE WELL.
    - 27.5. THE OWNER OF THE WELL APPROVES THE ELIMINATION OF THE BUFFER ZONE REQUIREMENT.

28. NO IMPOUNDMENT OF DISINFECTED TERTIARY RECYCLED WATER SHALL OCCUR WITHIN 100 FEET OF ANY DOMESTIC WATER SUPPLY WELL.

29. INSTALL BACKFLOW PREVENTER ASSEMBLY ON ALL POTABLE WATER AND FIRE SERVICES PER CITY STD DET 18B-1.

30. PRIOR TO ACTUAL SERVICE CONNECTION TO RECYCLED WATER SYSTEM, CONTRACTOR SHALL PROVIDE TEMPORARY PIPING TO POTABLE SYSTEM SO THAT CITY PERSONNEL MAY PERFORM CROSS-CONNECTION TEST. UPON SUCCESSFUL CROSS-CONNECTION TEST, CONTRACTOR SHALL REMOVE TEMPORARY PIPING AND PERFORM FINAL CONNECTION TO THE RECYCLED WATER METER.

CONTRACTOR SHALL RESTORE THE AREAS IMPACTED BY THE CONSTRUCTION TO THEIR ORIGINAL CONDITION UNLESS OTHERWISE NOTED.

32. ADD RECYCLED WATER DECAL STICKER TO THE EXTERIOR OF ALL IRRIGATION CONTROLLERS OPERATING IN THE RECYCLED WATER USE AREA.

RECYCLED WATER DESIGN DRAWING GENERAL NOTES - 2	APPROVED BY:	
	DATE : DEC 2014 REVISED : –	DWG. RW-3B

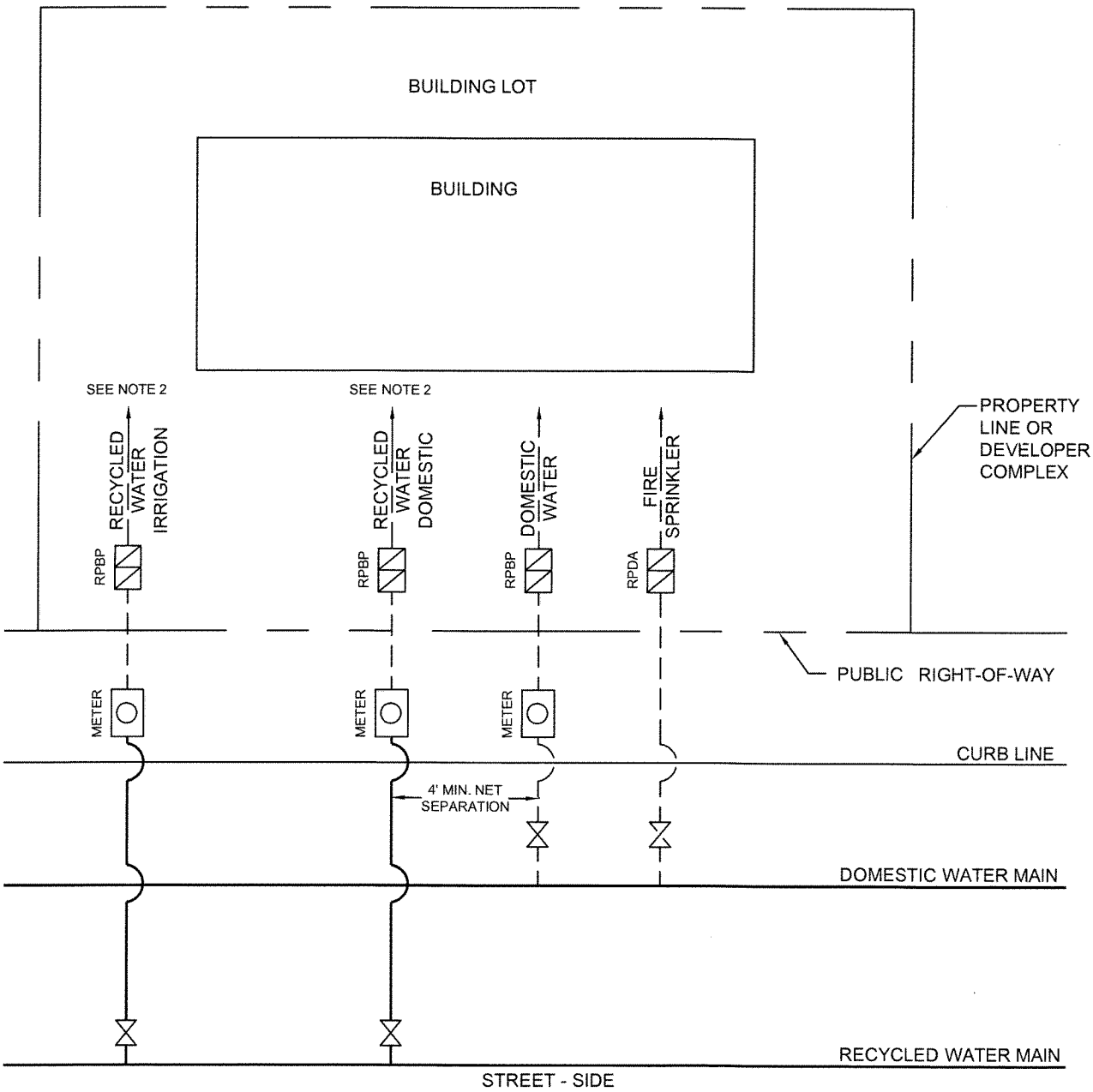

NOTE:

1. ALL BACKFLOW PREVENTERS MUST BE APPROVED PER CITY STANDARD DETAIL 20B OR 20B-1.
2. BACKFLOW PREVENTER FOR RECYCLED WATER SYSTEM MUST MEET PLUMBING CODE AND CALIFORNIA CODE OF REGULATION REQUIREMENTS.
3. METERS TO BE INSTALLED PER STANDARD DETAIL DRAWING 4B, 4B-1A AND RW-1A

ABBREVIATIONS:

RPBP	REDUCED PRESSURE BACKFLOW PREVENTER
RPDA	REDUCED PRESSURE DETECTOR ASSEMBLY

INSTALLATION OF RECYCLED WATER SERVICE LINES	APPROVED BY:	
	DATE: APRIL 2016	DWG. RW-4

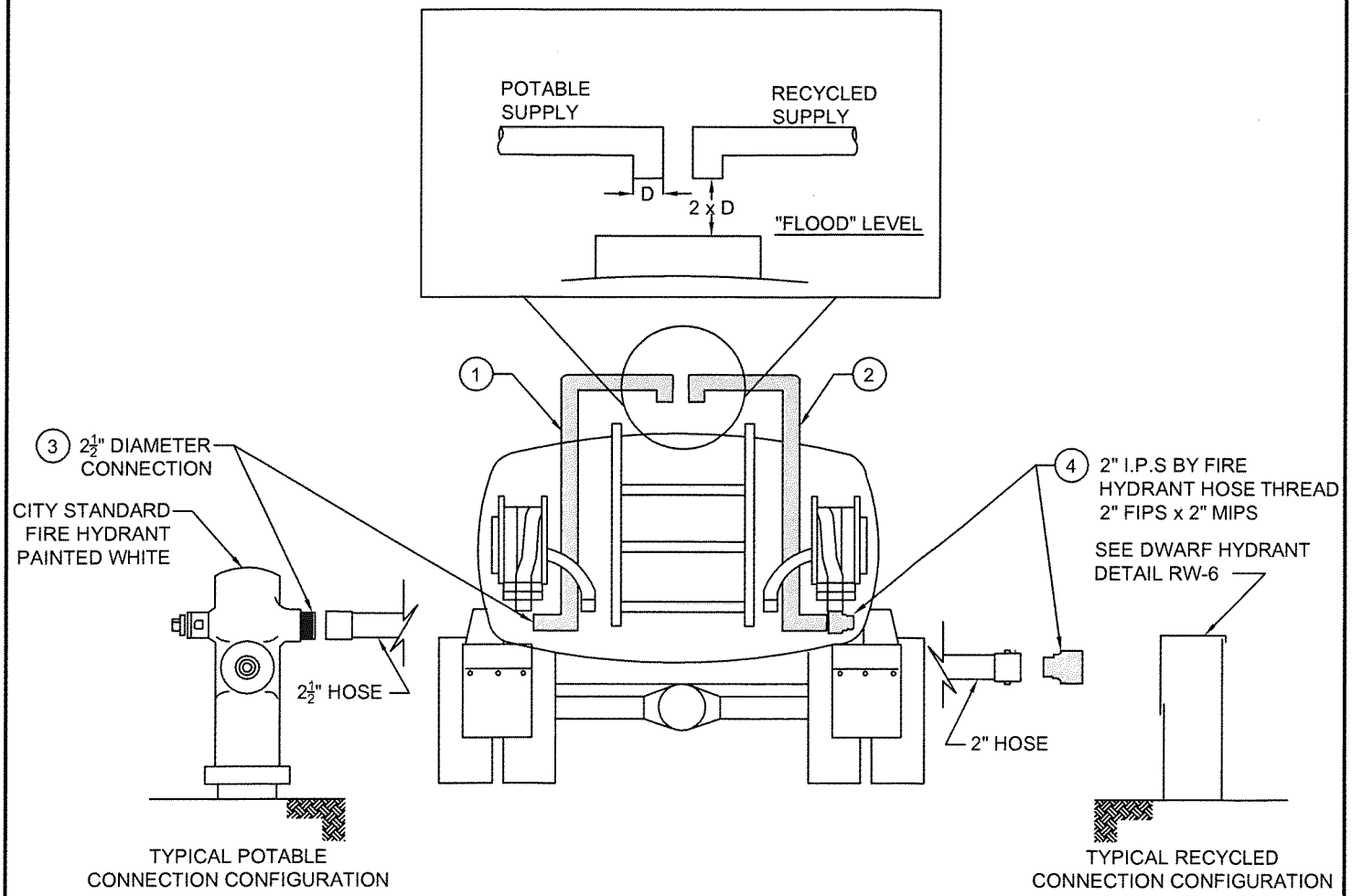

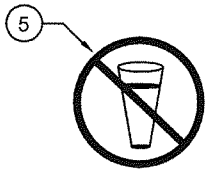

NOTES:

1. THE POTABLE SUPPLY PIPELINE ON TRUCK SHALL BE PAINTED BLUE WITH "POTABLE WATER" STENCILED ON THE PIPELINE.
2. THE RECYCLED SUPPLY PIPELINE ON TRUCK SHALL BE PAINTED PURPLE WITH "RECYCLED WATER" STENCILED ON THE PIPELINE.
3. THE POTABLE SUPPLY CONNECTION BETWEEN THE HOSE AND HYDRANT SHALL BE A STANDARD 2½" DIAMETER THREADED CONNECTION
4. THE RECYCLED SUPPLY CONNECTION BETWEEN THE HOSE AND HYDRANT SHALL BE A STANDARD 2" DIAMETER THREADED CONNECTION
5. SIGNAGE IS REQUIRED ON BOTH SIDES, WITH WORDING "RECYCLED WATER - DO NOT DRINK" AND THE INTERNATIONAL SYMBOL SHOWN.

TYPICAL TRUCK AND WATER SUPPLY SYSTEMS	APPROVED BY:	
	DATE : APRIL 2016	DWG. RW-5

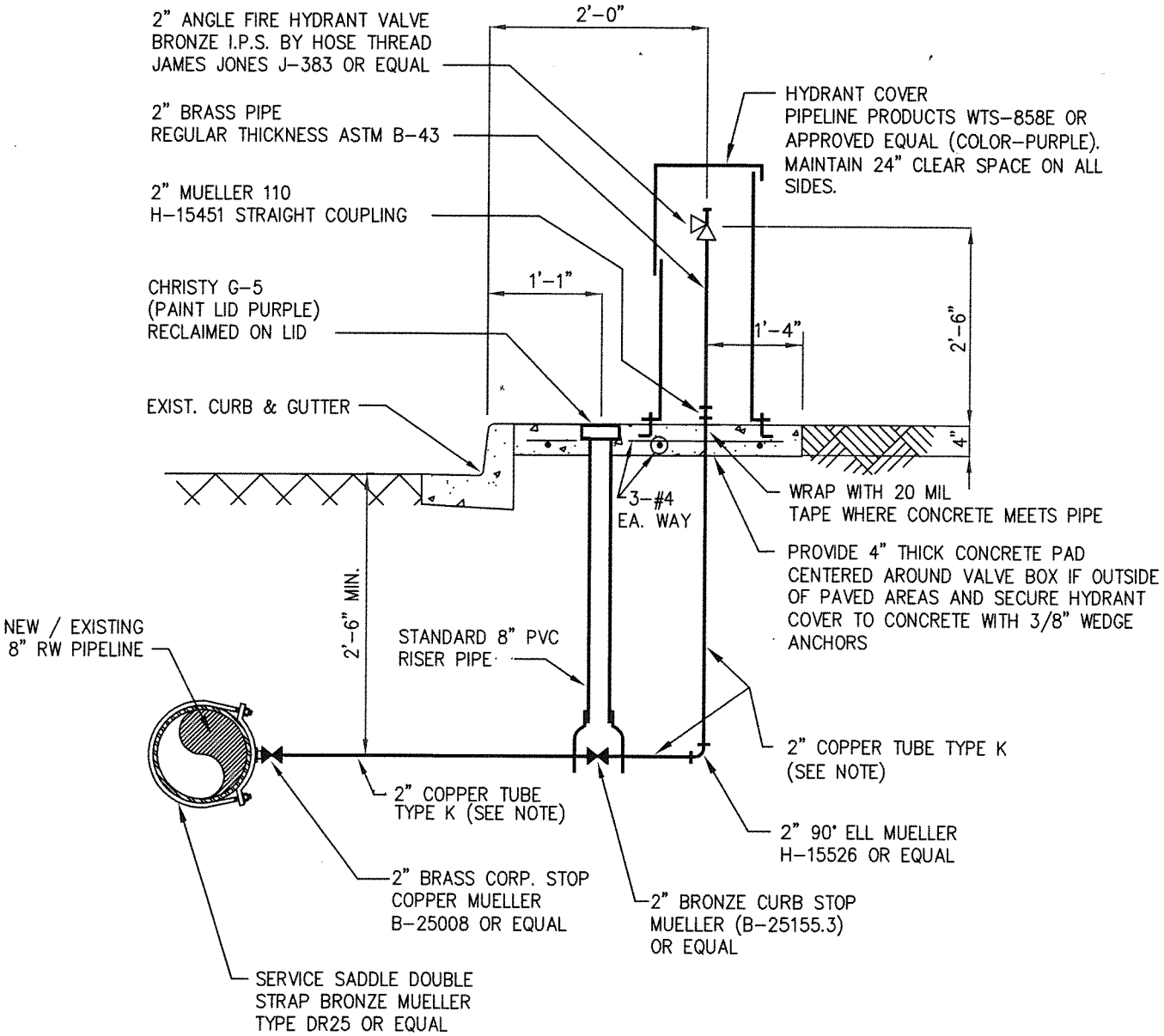

NOTE:

ALL BURIED COPPER TUBE TYPE K TO BE PRIMED AND WRAPPED WITH 20 MIL POLYETHYLENE OR PLASTIC SLEEVED AND TAPED.

DWARF HYDRANT DETAIL

NO SCALE

DWARF HYDRANT	APPROVED BY:	
	DATE : APRIL 2016 REVISED :	DWG. RW-6