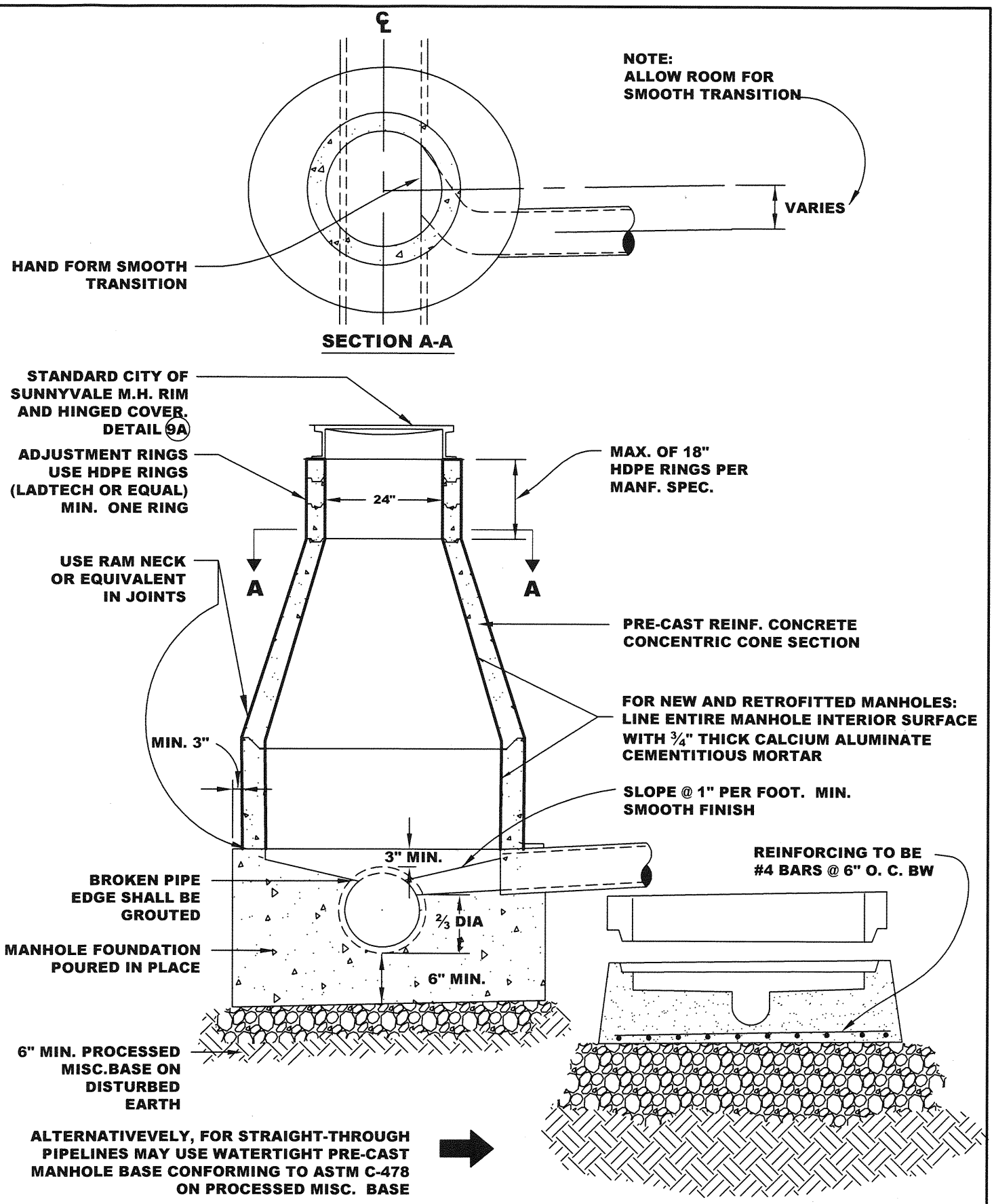

TYPE I - CONCENTRIC MANHOLE
8" TO 33" PIPE

APPROVED BY:

DATE : JUNE 30, 2006
REVISED : APRIL, 2013

DWG. 1A

2006 STANDARD DETAILS

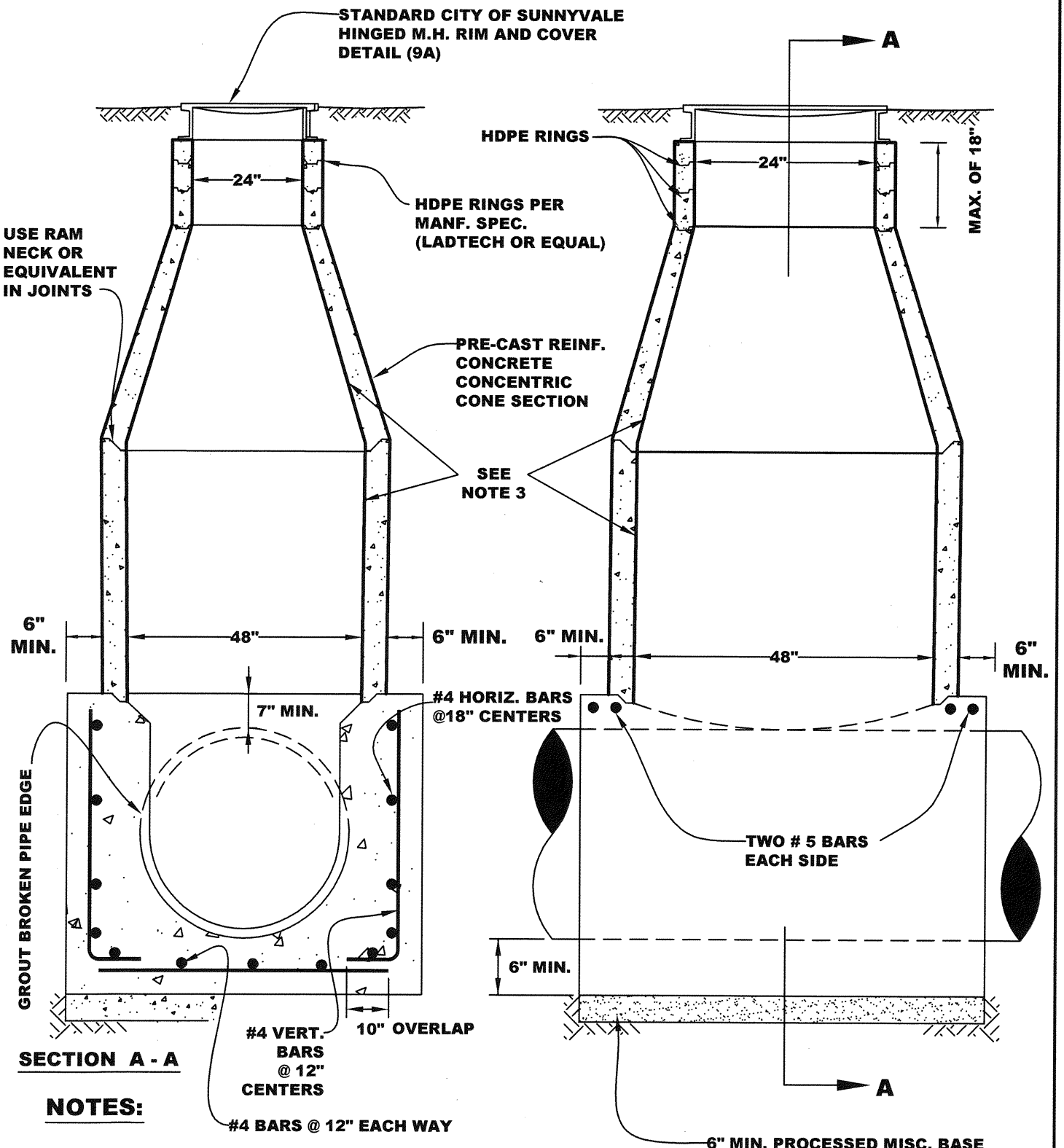

NOTES:

1. CENTER PIPE IN MANHOLE BASE
2. 3" MIN. COVER TO ALL REINFORCING STEEL
3. FOR NEW AND RETROFITTED MANHOLES: LINE ENTIRE MANHOLE INTERIOR SURFACE WITH ¾" THICK CALCIUM ALUMINATE CEMENTITIOUS MORTAR

TYPE II - CONCENTRIC MANHOLE
36" TO 48" PIPE

APPROVED BY:

DATE : JUNE 30, 2006
REVISED : APRIL, 2013

DWG. 2A

2006 STANDARD DETAILS

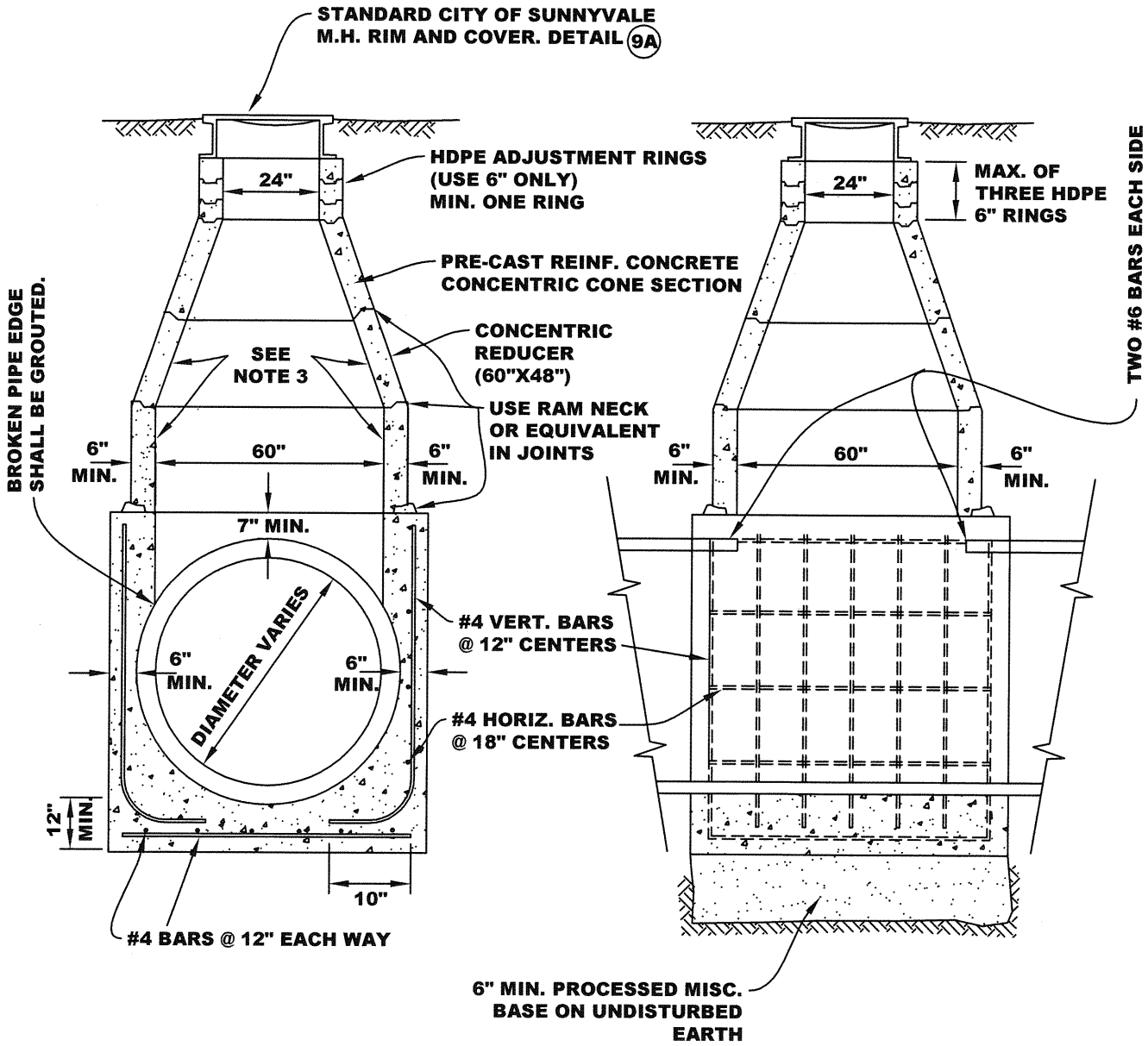

END VIEW **SIDE VIEW**

NOTES:

1. CENTER PIPE MANHOLE BASE
2. 3" MIN. COVER TO ALL REINFORCING STEEL
3. FOR NEW AND RETROFITTED MANHOLES: LINE ENTIRE MANHOLE INTERIOR SURFACE WITH ¾" THICK CALCIUM ALUMINATE CEMENTITIOUS MORTAR

TYPE III - CONCENTRIC MANHOLE 51" PIPE & LARGER	APPROVED BY:	
	DATE : JUNE 30, 2006 REVISED : APRIL, 2013	DWG. 3A

2006 STANDARD DETAILS

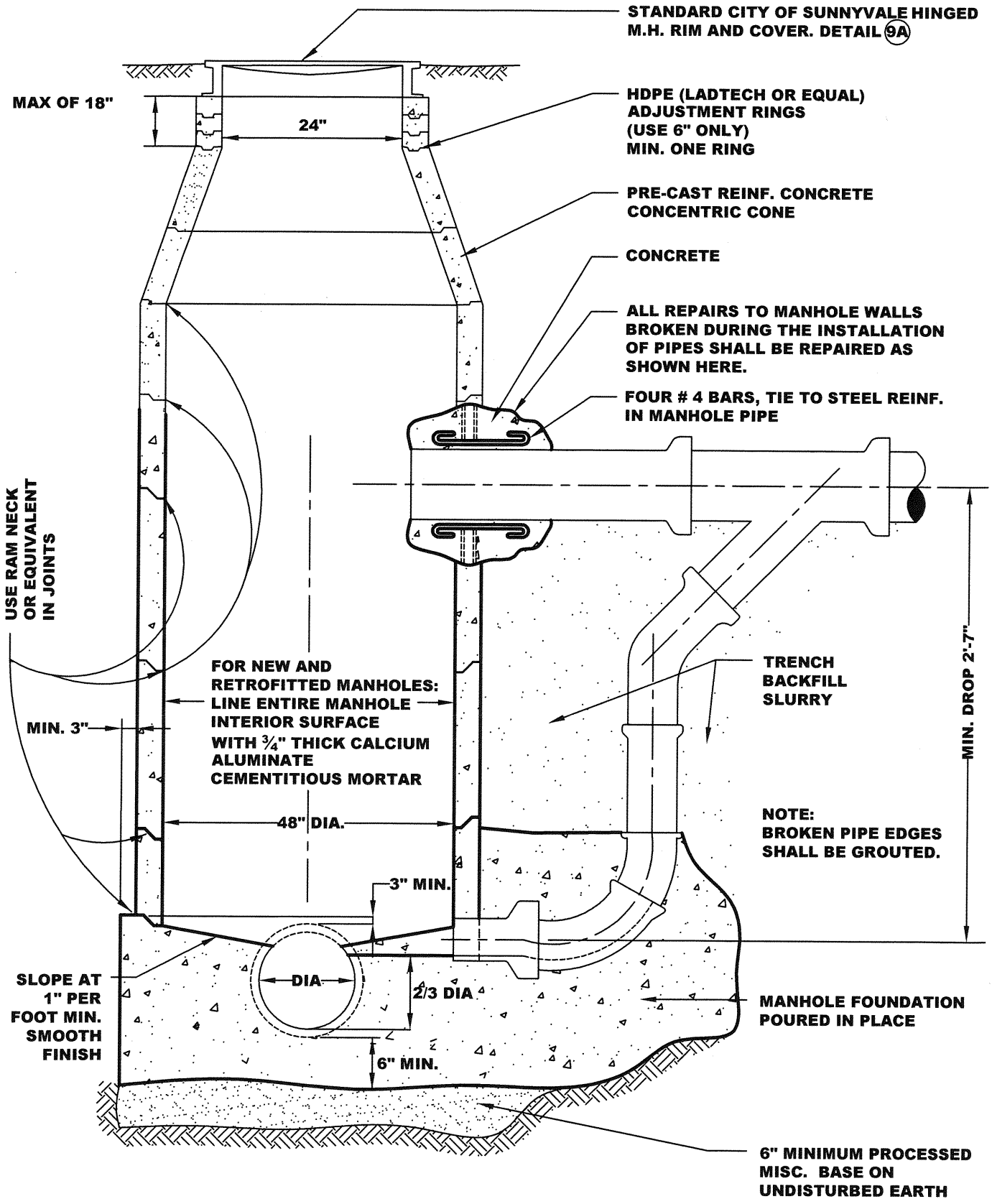

TYPE IV - CONCENTRIC DROP MANHOLE

APPROVED BY:

DATE : JUNE 30, 2006
REVISED : APRIL, 2013

DWG. 4A

2006 STANDARD DETAILS

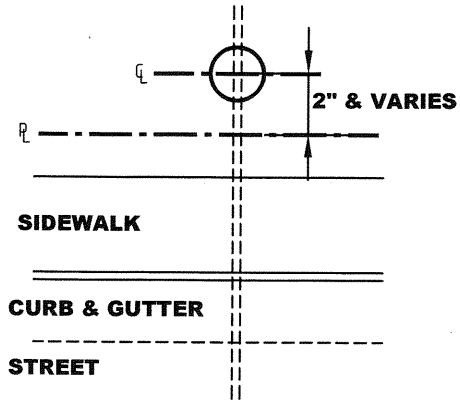

TYPICAL LOCATION

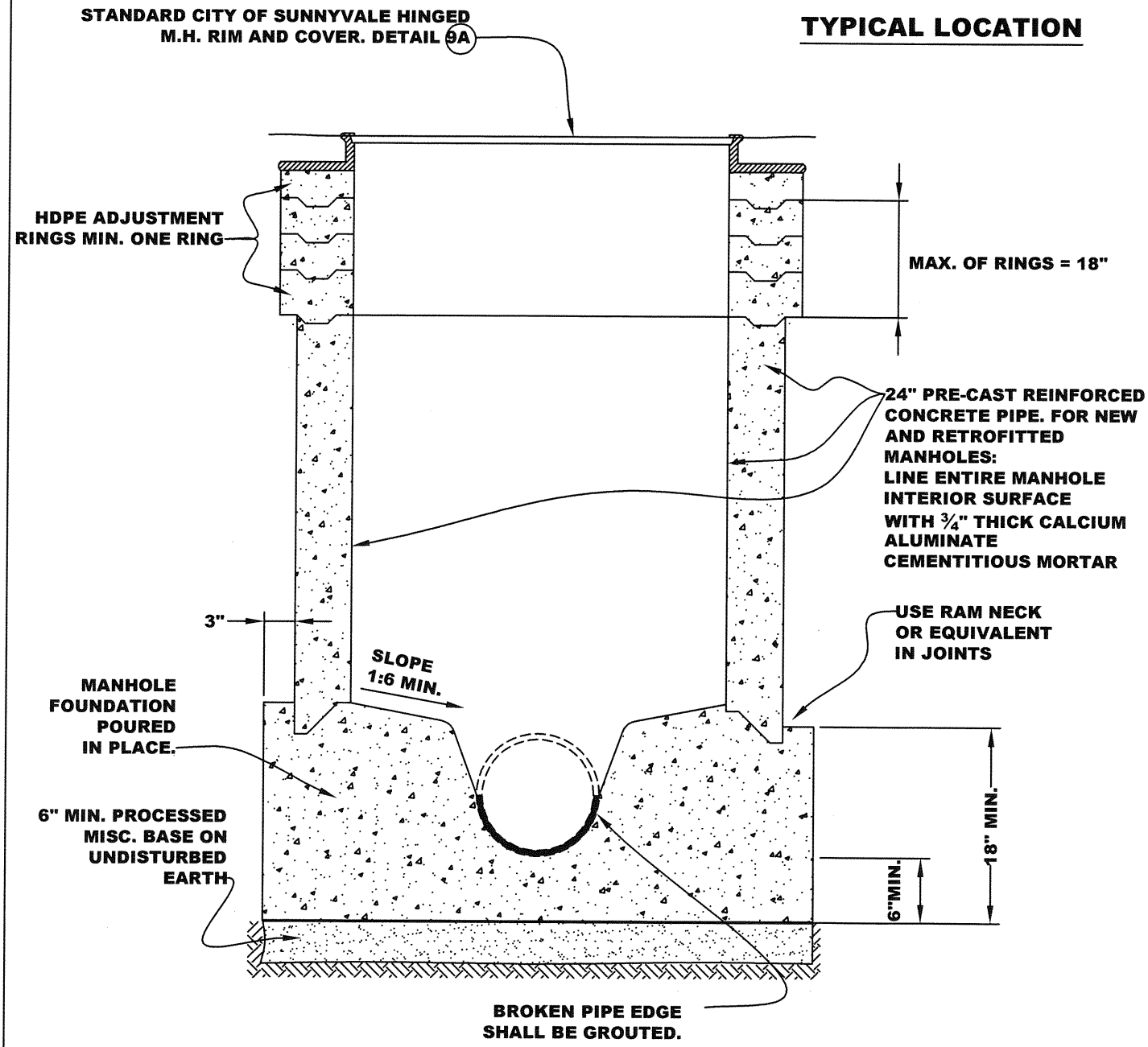

TYPE VI - INDUSTRIAL WASTE MANHOLE 4" TO 12" PIPE

APPROVED BY:

DATE : JUNE 30, 2006
REVISED : APRIL, 2013

DWG. 6A

2006 STANDARD DETAILS

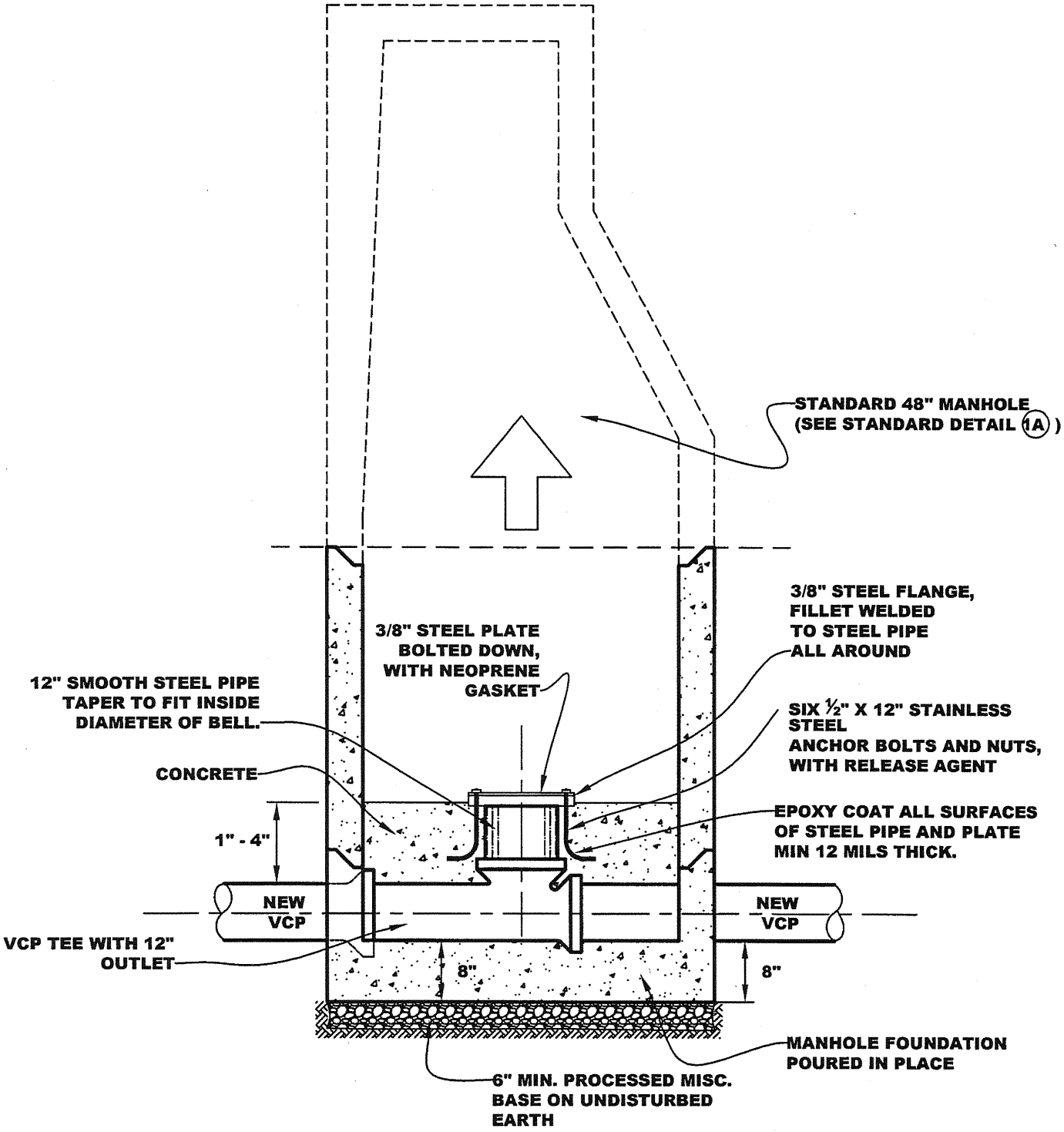

TYPE VII MANHOLE, PRESSURIZED (FOR NEW INSTALLATIONS)

APPROVED BY

DATE : JUNE 30, 2006

DWG. 7A

2006 STANDARD DETAILS

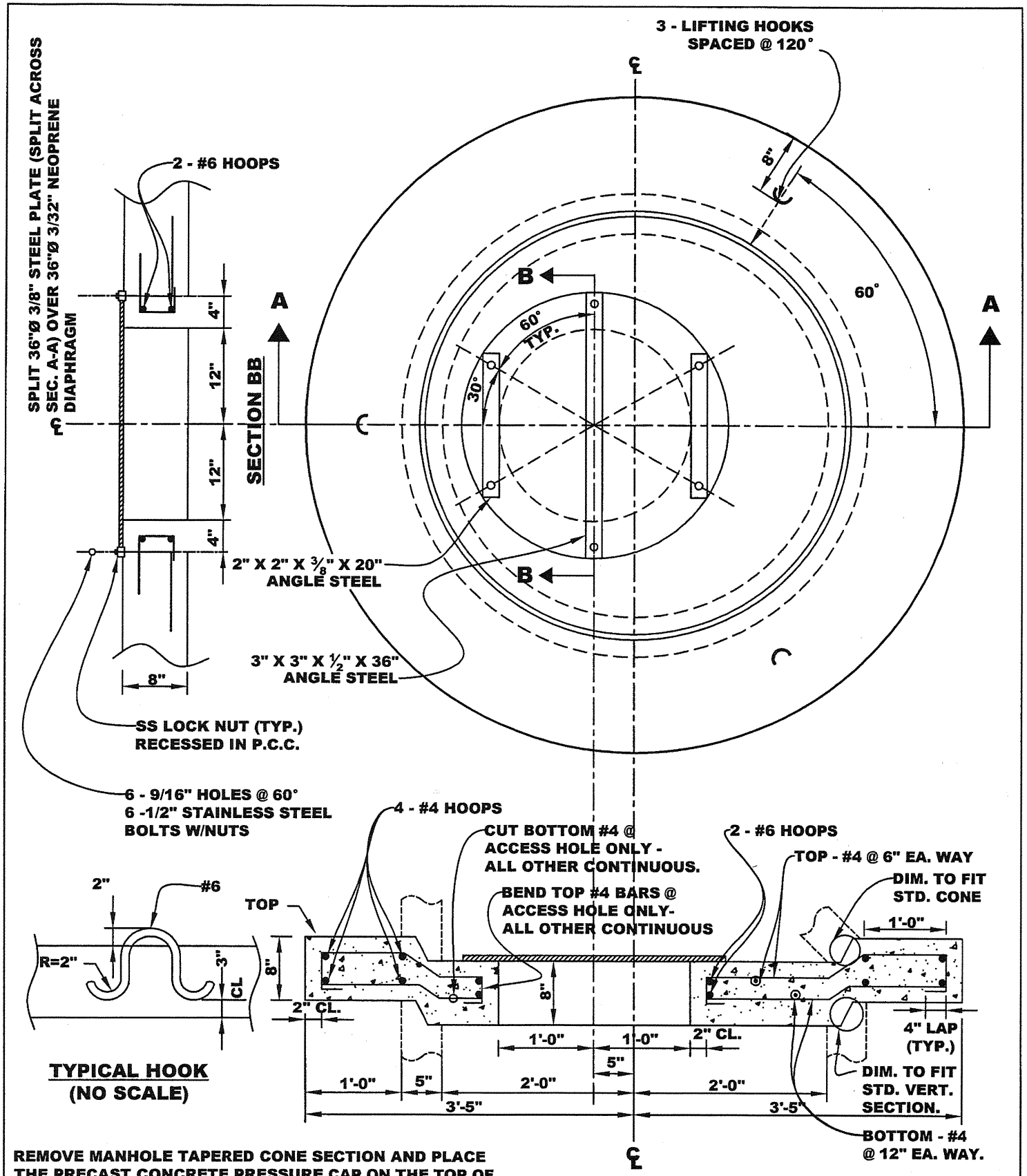

REMOVE MANHOLE TAPERED CONE SECTION AND PLACE THE PRECAST CONCRETE PRESSURE CAP ON THE TOP OF THE PARALLEL PIPE SECTION. REINSTALL THE TAPERED CONE SECTION AND RECONSTRUCT THE MANHOLE TOP.

TYPE VIII MANHOLE, PRESSURIZED (FOR EXISTING INSTALLATIONS)

APPROVED BY:

DATE : JUNE 30, 2006

DWG. 8A

2006 STANDARD DETAILS

ALL MATERIALS USED IN MANUFACTURING SHALL CONFORM TO ISO 1083.

COVER MARKINGS SHALL BE "SANITARY SEWER" FOR SANITARY SEWER MANHOLES OR "STORM DRAIN", "STORM SEWER", OR "STORM" FOR STORM DRAIN MANHOLES UNLESS OTHERWISE SPECIFIED.

CASTINGS SHALL BE DIPPED IN BLACK BITUMINOUS PAINT. MANUFACTURER SHALL CERTIFY THAT FRAME AND COVER MEET ALL LOAD REQUIREMENTS FOR H-20 HIGHWAY LOADING.

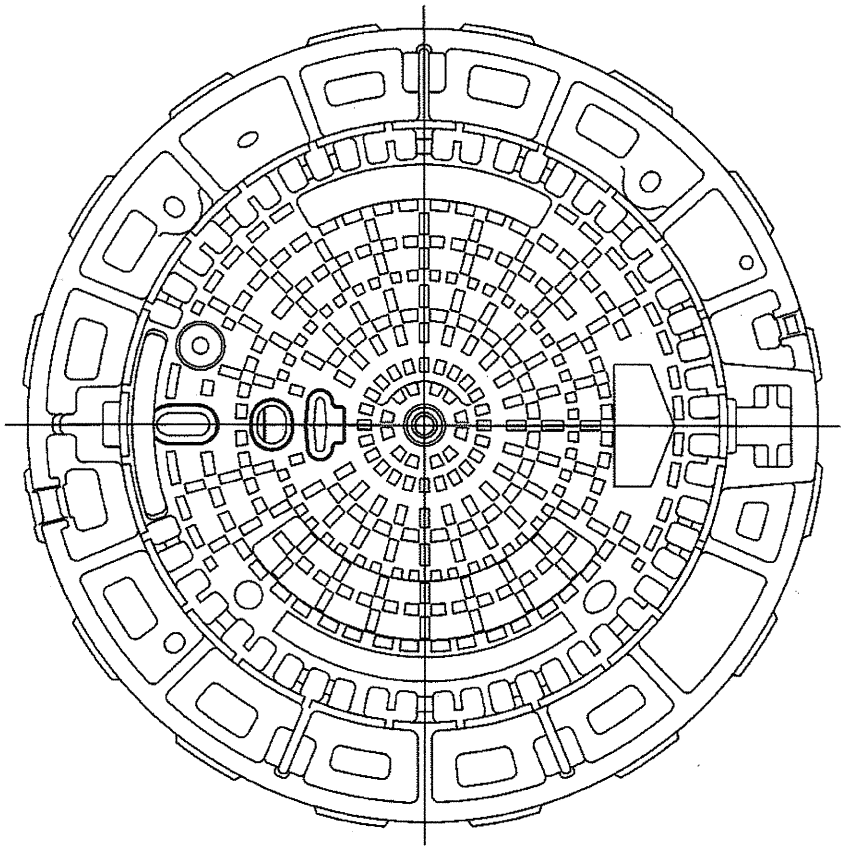

OPTIONAL LOCKING MECHANISM

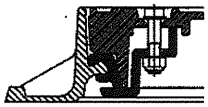

FRAME MARKING

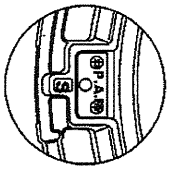

DETAIL A: LIFTING HOLES

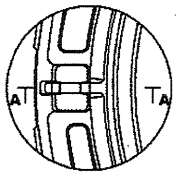

A-A

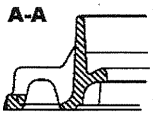

DIMENSIONS (INCHES)			WEIGHT (lbs)		REFERENCE
A	O	H	COVER AND FRAME	COVER ONLY	
33 1/2"	24	4	195	122	CDPA60EHSSE

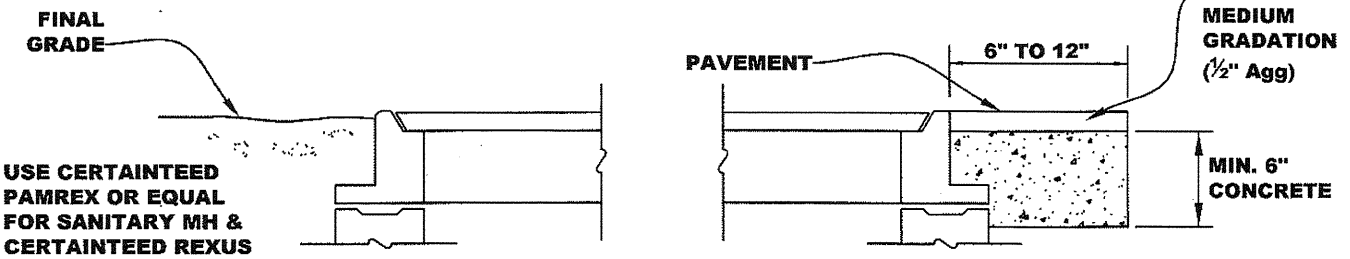

DETAIL FOR NON - PAVED SURFACE

DETAIL FOR PAVED SURFACE

HINGED MANHOLE RIM & COVER

APPROVED BY:

DATE : JUNE 30, 2006
REVISED : NOV, 2010

DWG. 9A

2006 STANDARD DETAILS

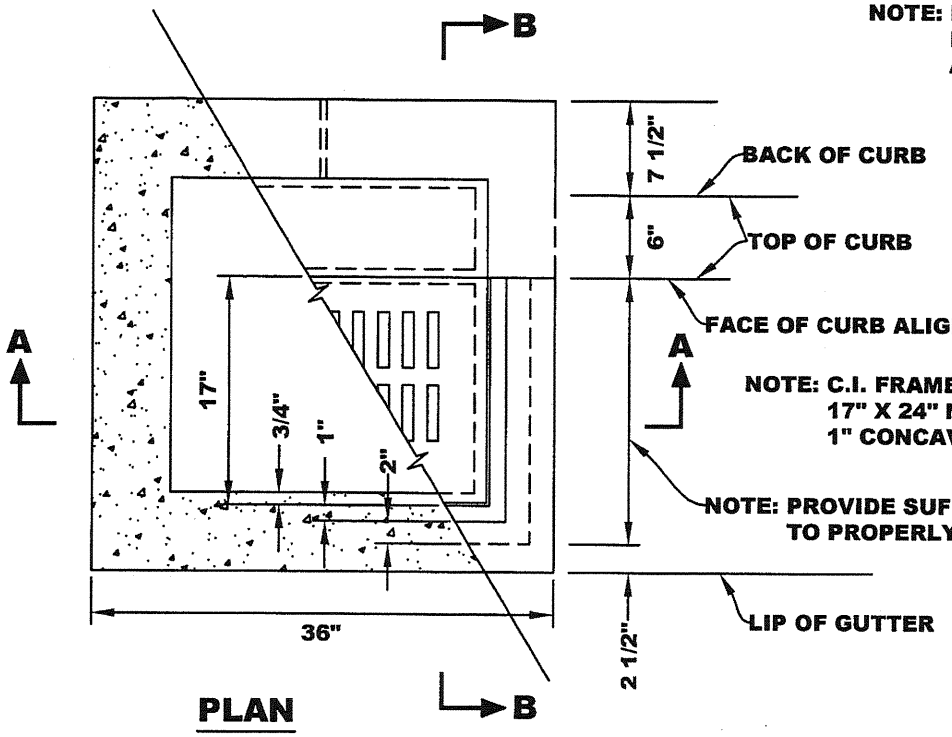

NOTE: INSTALL "NO DUMPING" MESSAGE ON TOP OF CURB AT CATCH BASIN

NOTE: C.I. FRAME AND BICYCLE PROOF GRATE 17" X 24" NOMINAL 1" CONCAVE GRATE*

NOTE: PROVIDE SUFFICIENT CLEARANCE TO PROPERLY SEAT GRATE

PLAN

* CALTRANS STANDARD PLAN D77-8 SHALL BE AN ACCEPTABLE ALTERNATIVE

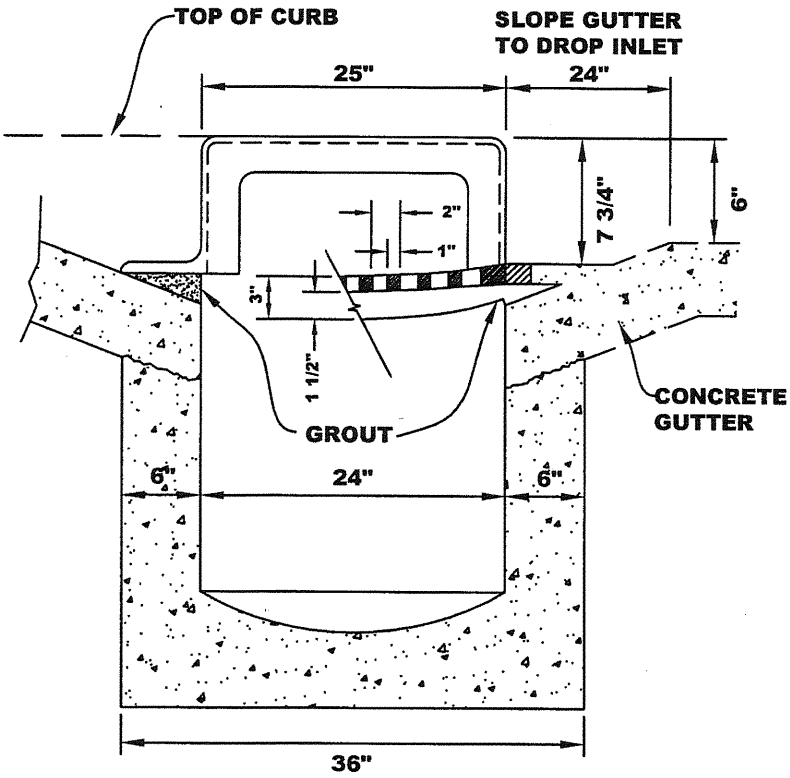

SECTION A-A

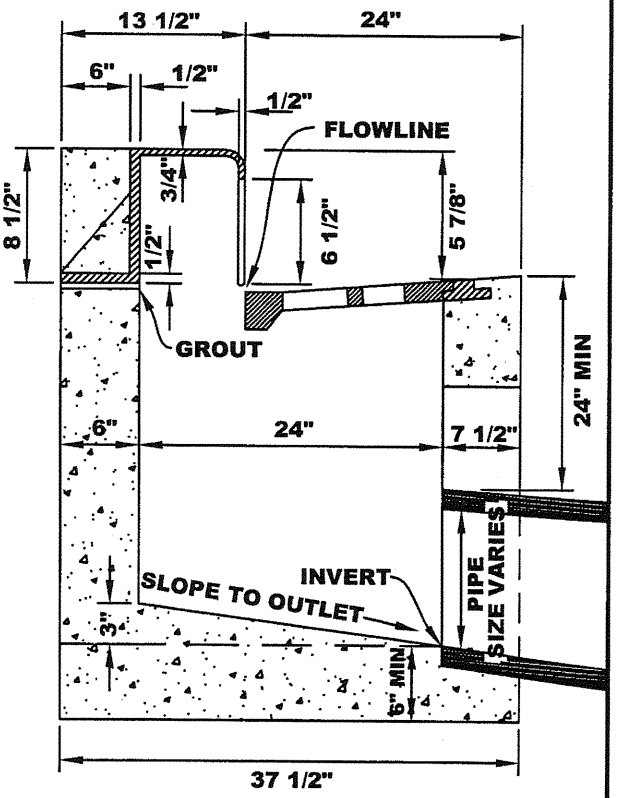

SECTION B-B

24" CURB DROP INLET	APPROVED BY:	
	DATE : JUNE 30, 2006	DWG. 10A

2006 STANDARD DETAILS

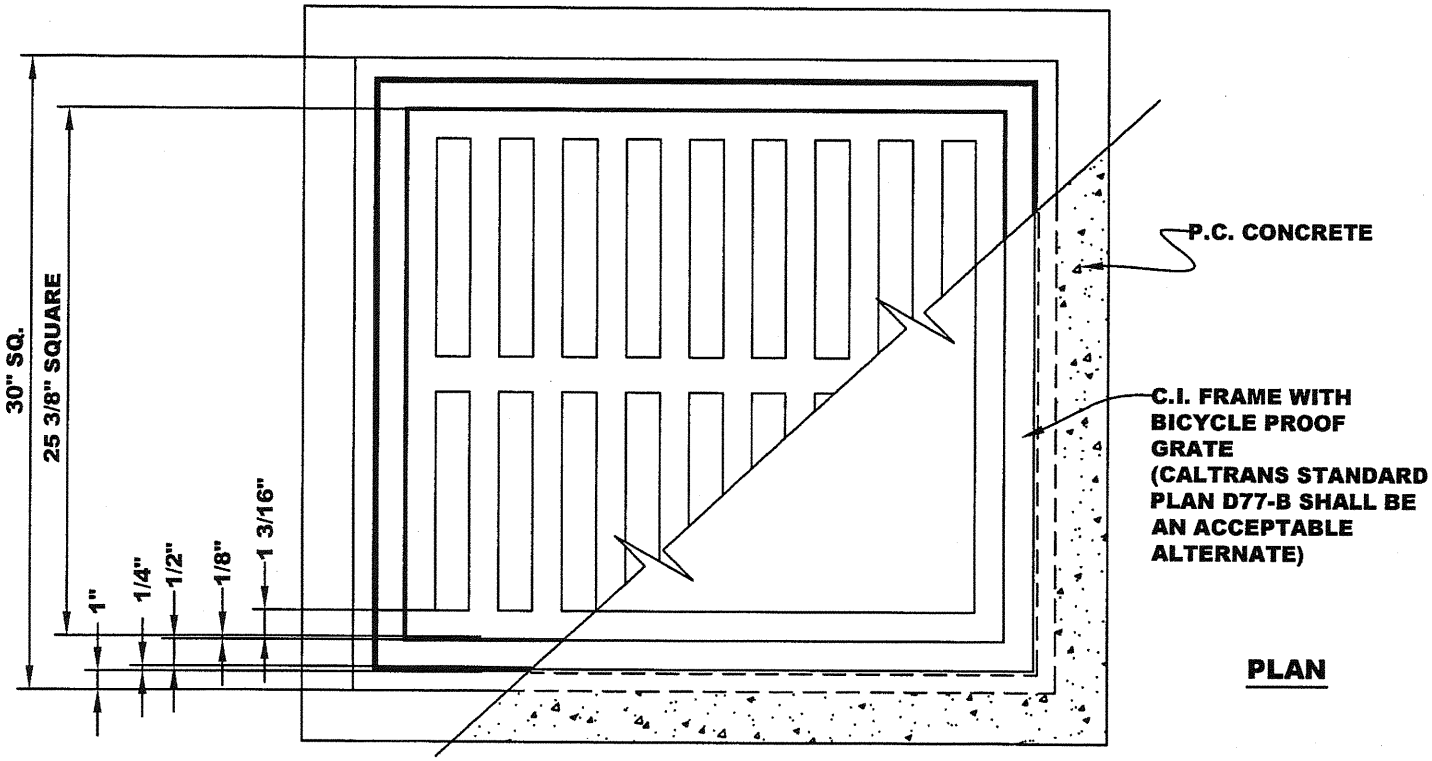

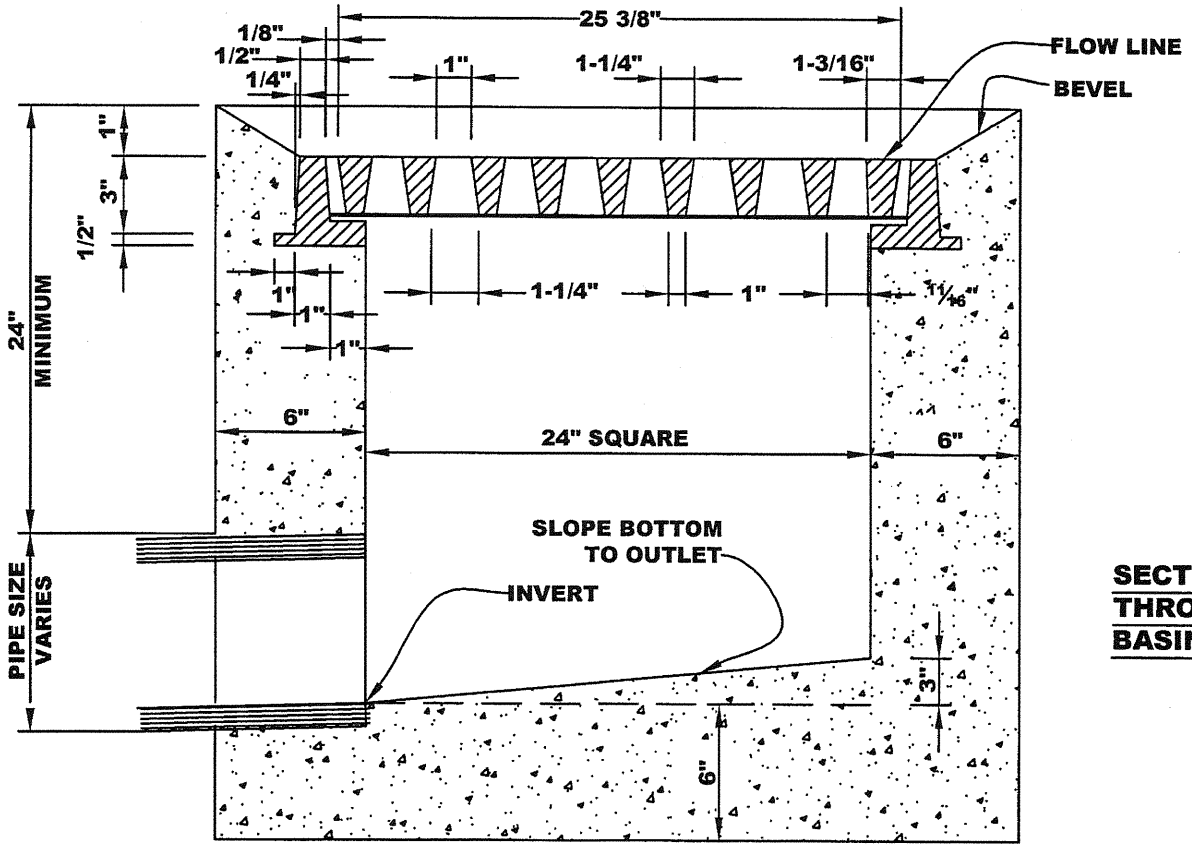

NOTE:
INSTALL "NO DUMPING" MESSAGE IMMEDIATELY ADJACENT TO DROP INLET

24" FLAT GRATE DROP INLET	APPROVED BY:	
	DATE : JUNE 30, 2006	DWG. 11A

2006 STANDARD DETAILS

GENERAL NOTES:

1. FRAME AND GRATING TO BE OF CAST IRON (PHOENIX P6002A OR EQUAL), OR HOT DIP GALVANIZED IN ACCORDANCE WITH ASTM A-123.
2. FRAME TO BE SET IN CEMENT MORTAR, GRATES SHALL BE BICYCLE PROOF. (CALTRANS STANDARD PLAN D77-B SHALL BE AN ACCEPTABLE ALTERNATE.
3. INSTALL "NO DUMPING" MESSAGE AT TOP OF CURB AT CATCH BASIN.

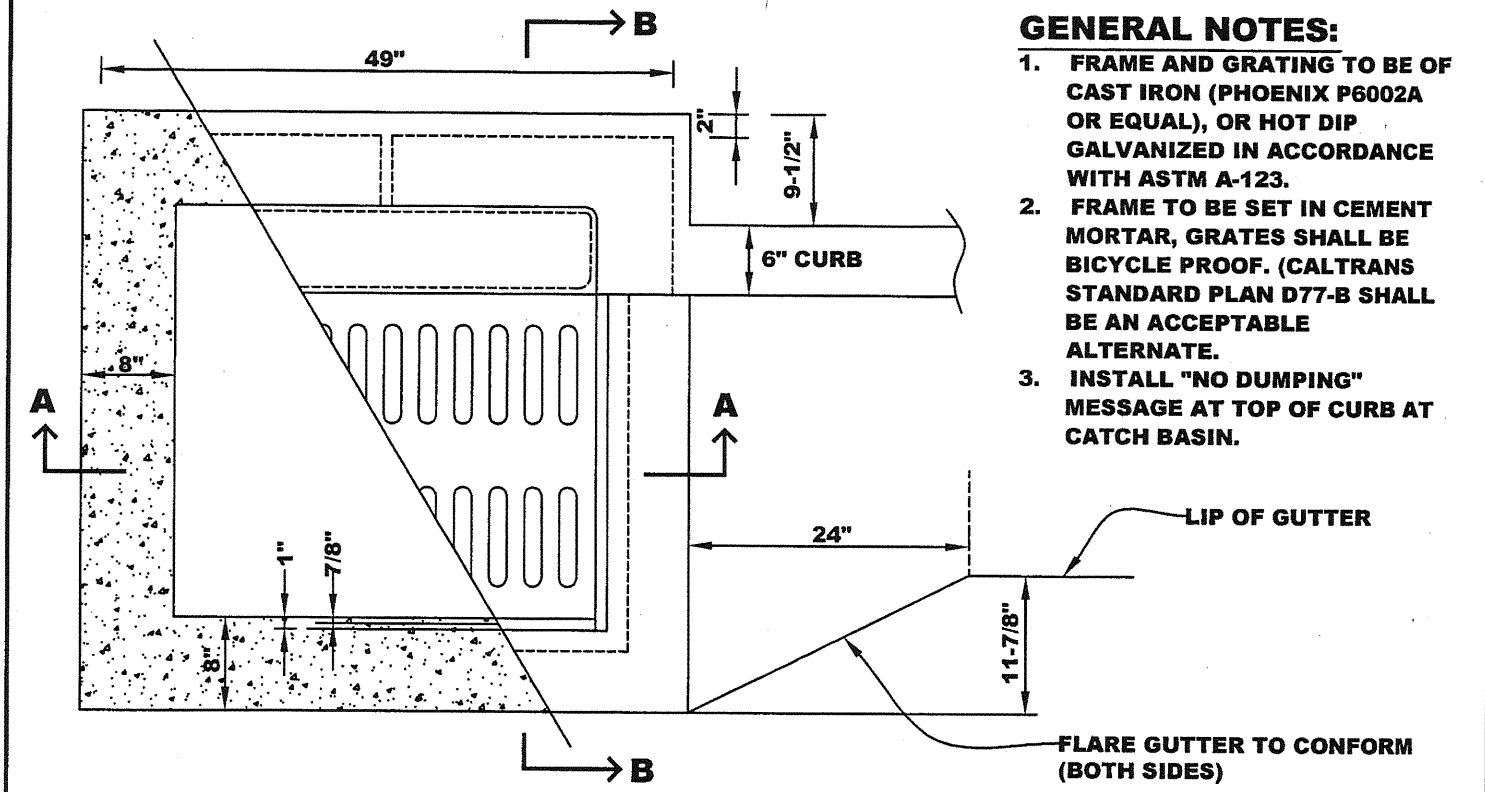

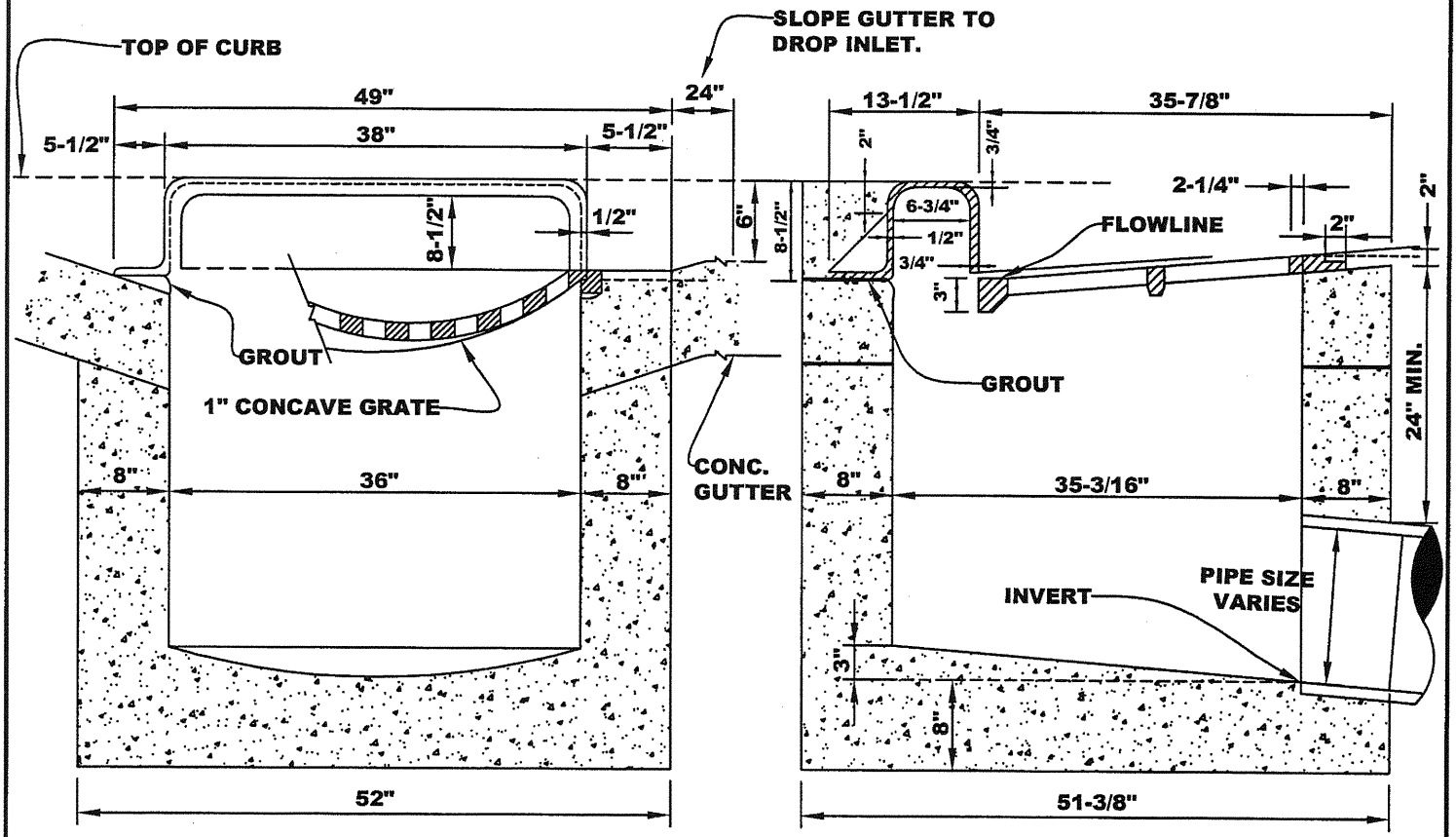

SECTION A - A

SECTION B - B

- ALL CASTING DIMENSIONS ARE APPROXIMATE

36" CURB DROP INLET	APPROVED BY:	
	DATE : JUNE 30, 2006	DWG. 12A

2006 STANDARD DETAILS

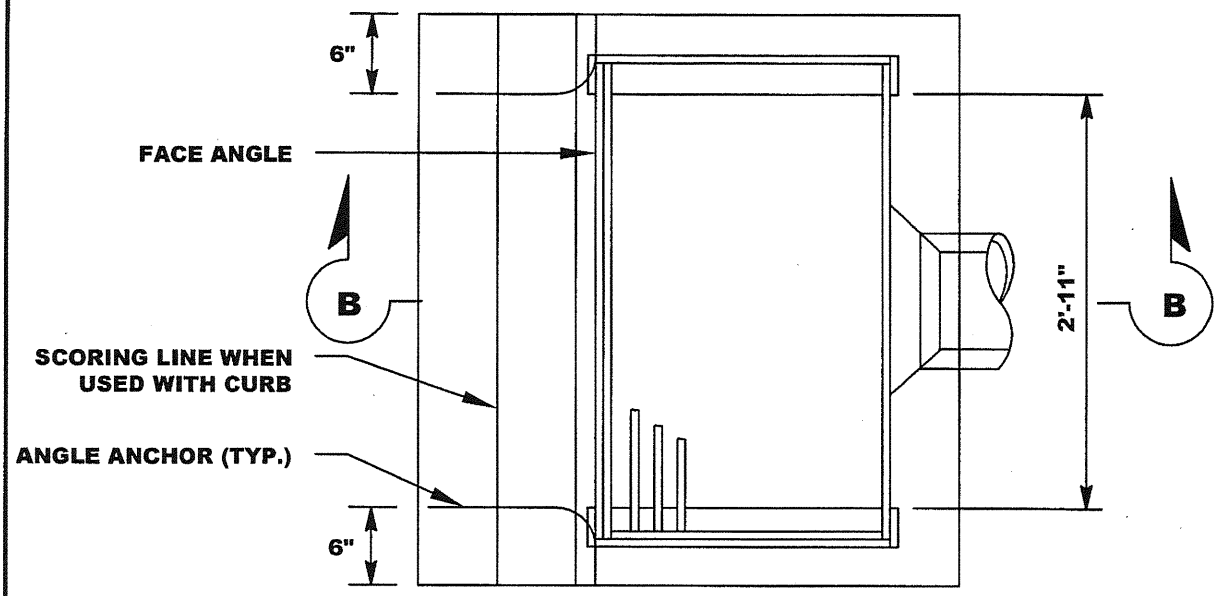

PLAN

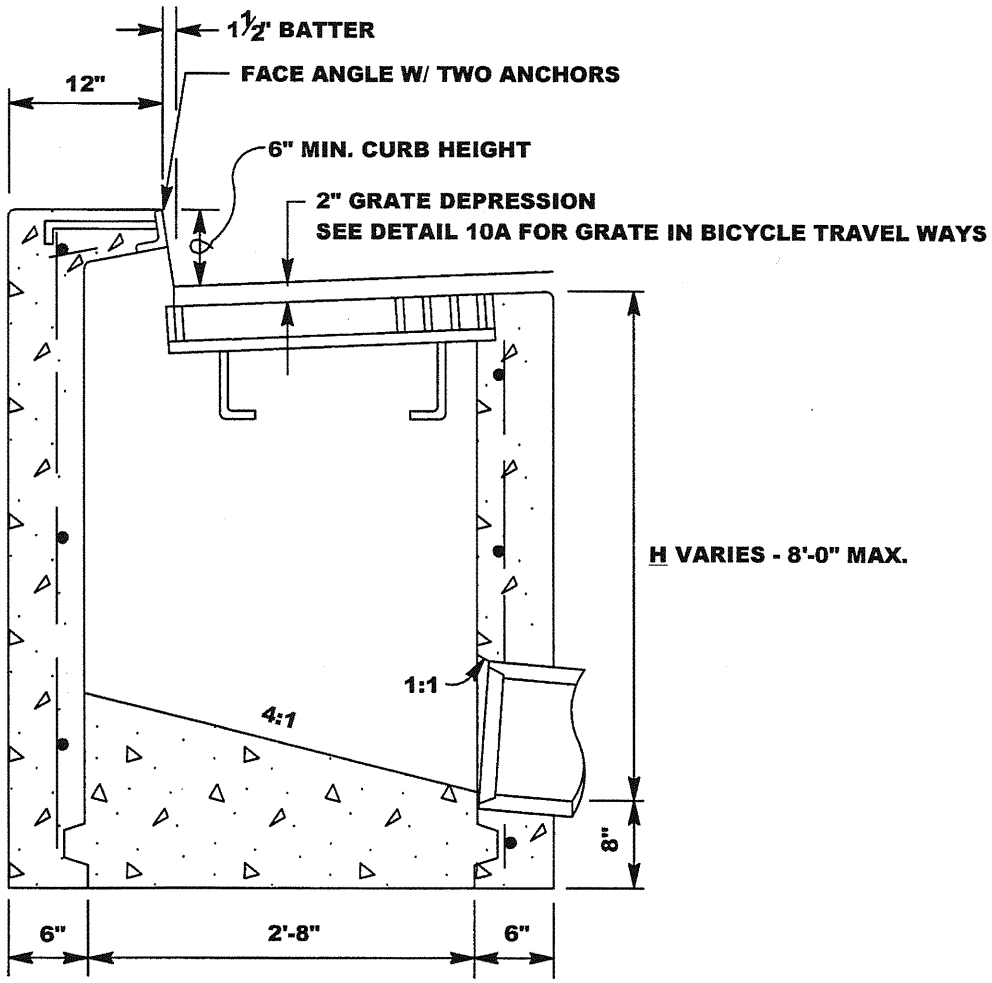

SECTION B-B

TYPE GO INLET	APPROVED BY:	
	DATE : JUNE 30, 2006	DWG. 13A

2006 STANDARD DETAILS

PER LATEST EDITION

OF

CALTRANS

STANDARD PLANS

D77B

TYPE 18-8C AND 24-10C GRATE (CAST NODULAR IRON)

2006 STANDARD DETAILS

BICYCLE PROOF GRATE DETAILS	Marvin A. Rose APPROVED BY:	
	DATE : JUNE 30, 2006 REVISED : JUNE, 2007	DWG. 13A-1

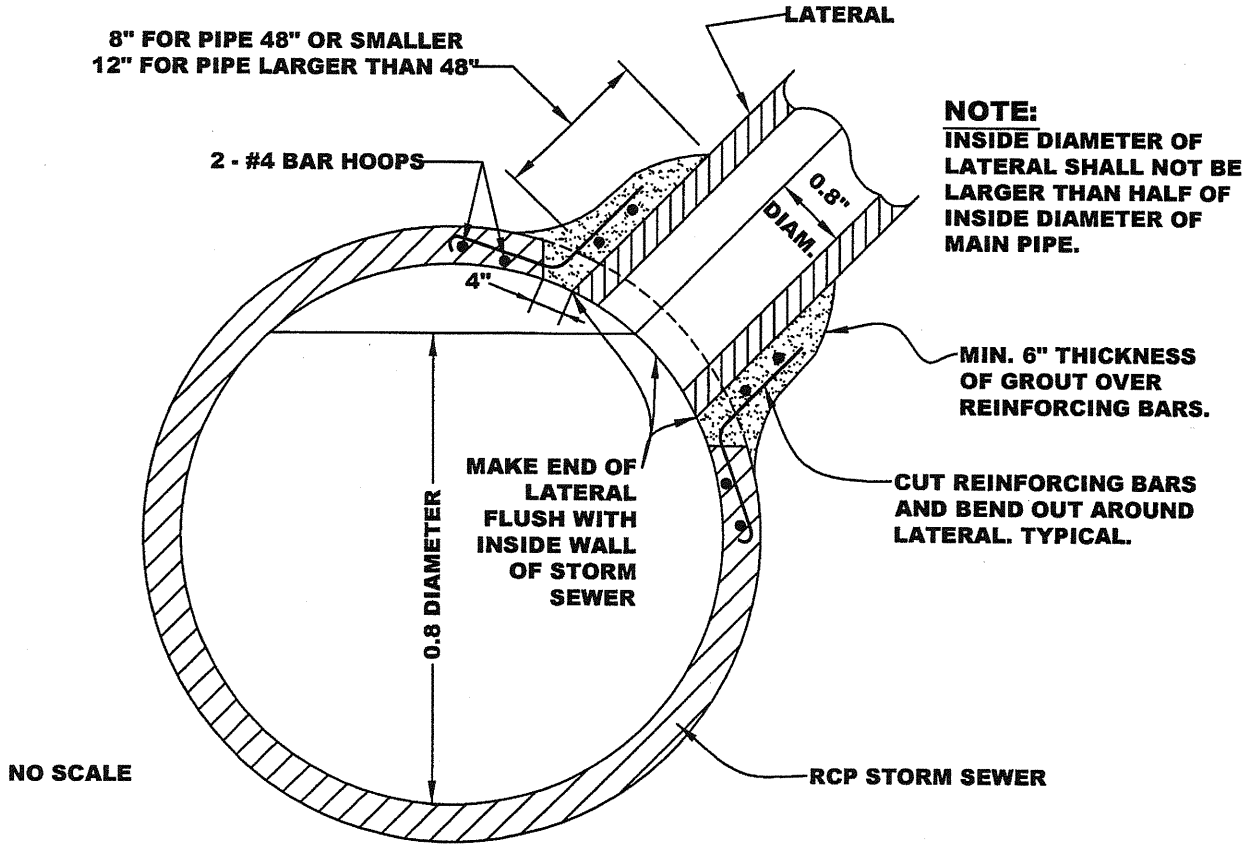

NOTE:
INSIDE DIAMETER OF LATERAL SHALL NOT BE LARGER THAN HALF OF INSIDE DIAMETER OF MAIN PIPE.

NO SCALE

CONNECTION TO REINFORCED CONCRETE PIPE

36" RCP AND LARGER

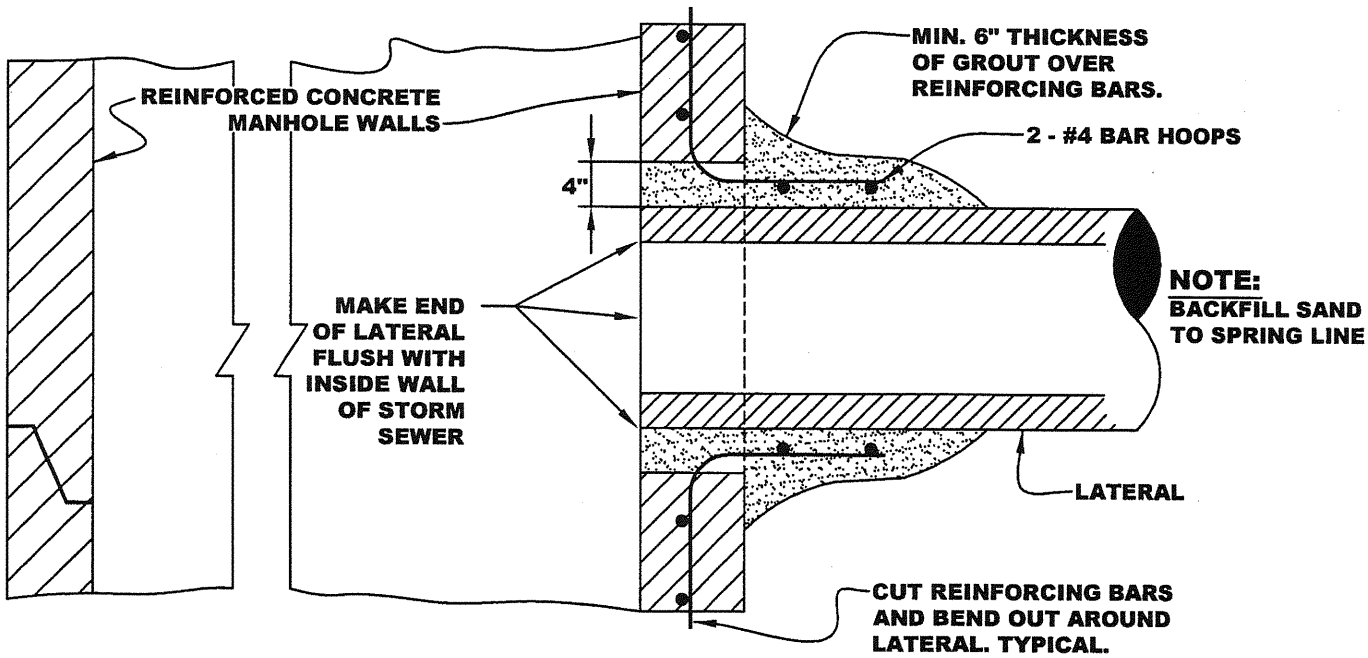

NOTE:
BACKFILL SAND TO SPRING LINE

STANDARD CONNECTION TO MANHOLE WALLS

NO SCALE

STANDARD CONNECTION TO MANHOLE WALLS, AND REINFORCED CONCRETE PIPE	APPROVED BY:	
	DATE : JUNE 30, 2006	DWG. 14A

2006 STANDARD DETAILS

ALTERNATE:

IN LIEU OF TAPPING SADDLE, IT IS PERMISSIBLE TO MAKE A DIRECT TAP TO MAIN USING "TAP-TITE" CONNECTION OR APPROVED EQUAL

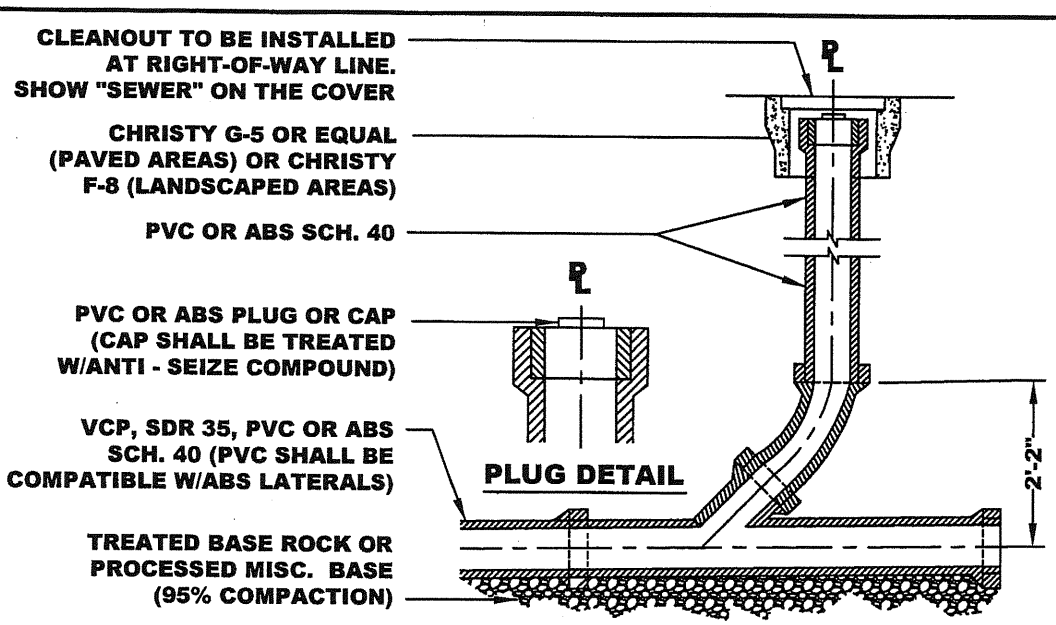

CLEANOUT
1"=2'-0"

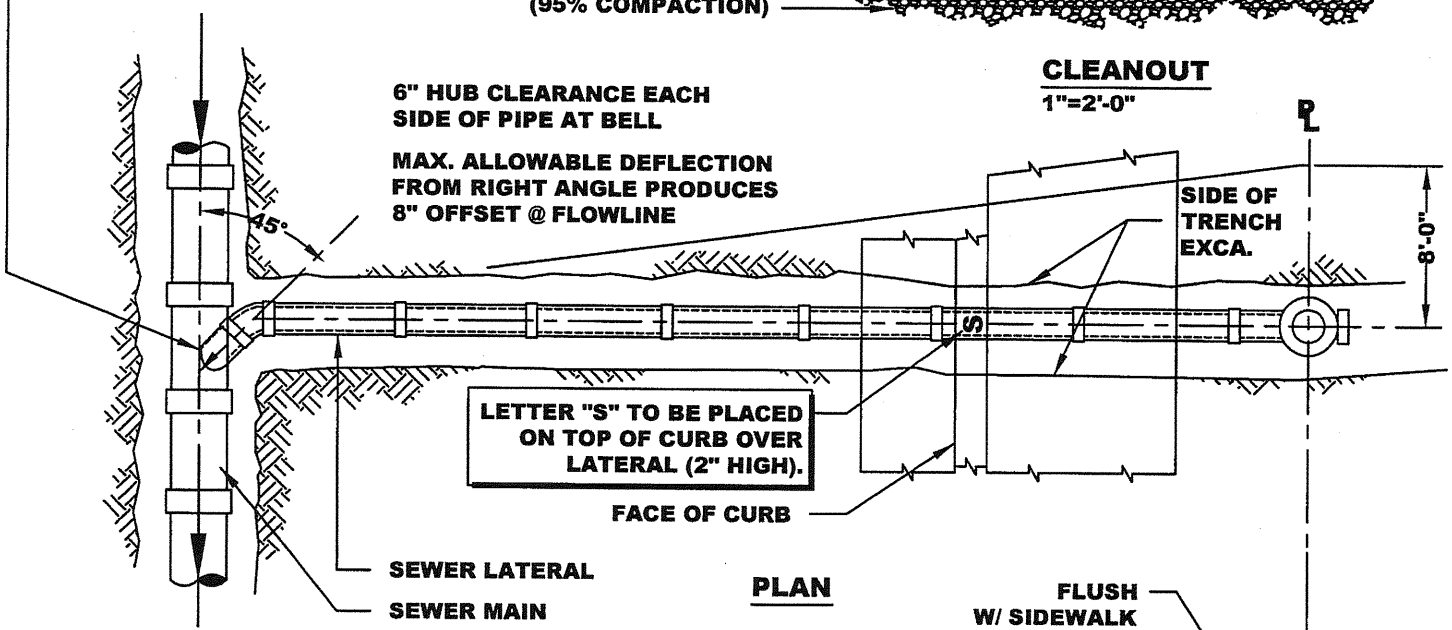

PLAN

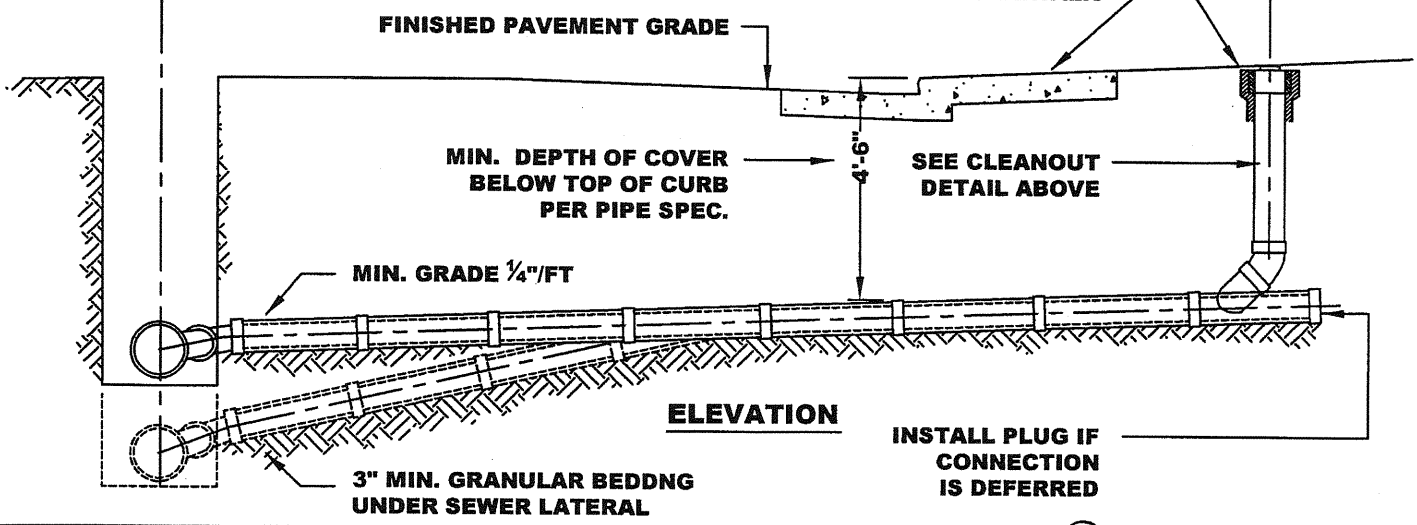

ELEVATION

SEWER LATERAL	APPROVED BY:	
	DATE : JUNE 30, 2006	DWG. 15A

2006 STANDARD DETAILS

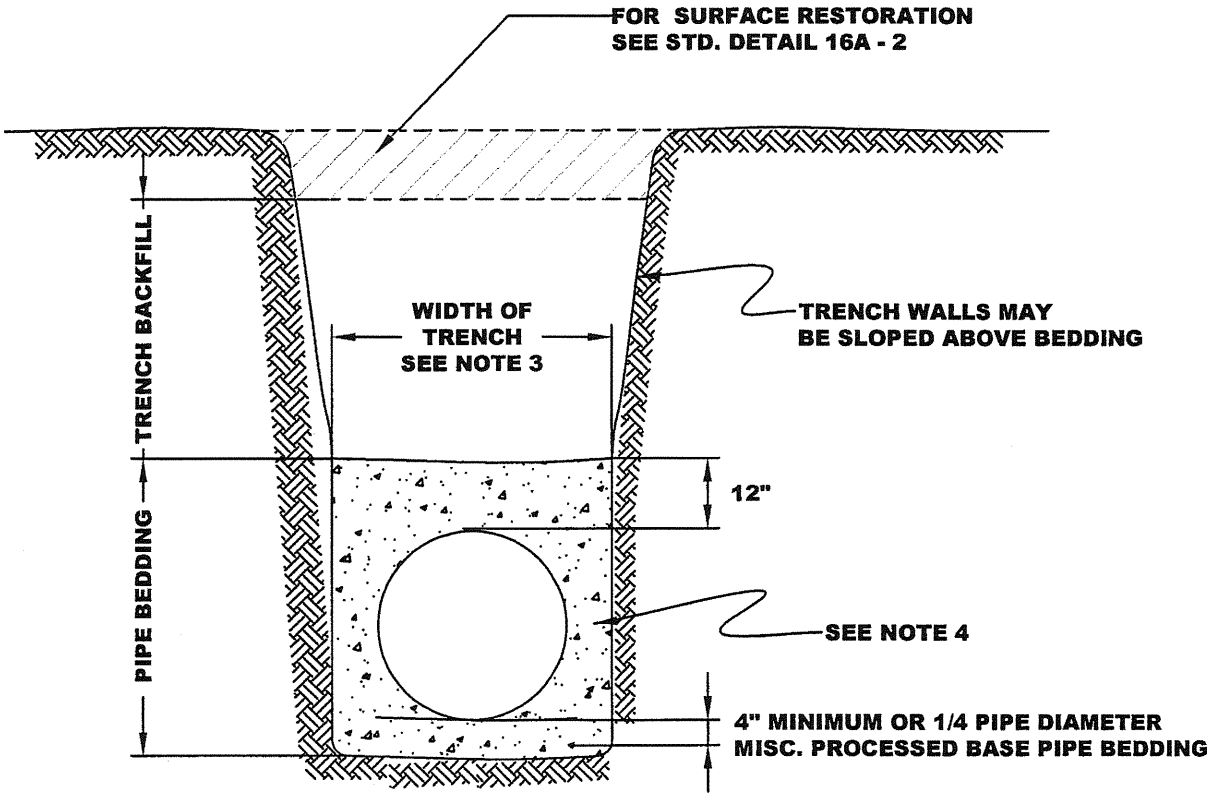

NOTES:

1. THIS DETAIL APPLIES TO ALL PIPES 6" NOM. DIAMETER AND GREATER.
2. TRENCH WIDTH SHALL BE NOT MORE THAN 18" WIDER THAN THE LARGEST OUTSIDE DIAMETER OF THE PIPE. THERE SHALL BE A MINIMUM OF 6" CLEARANCE ON EACH SIDE OF THE PIPE AT THE LARGEST OUTSIDE DIAMETER.
3. PIPE SHALL BE BEDDED FROM BELOW THE BOTTOM OF THE PIPE TO 12" ABOVE THE TOP OF THE PIPE.
4. BEDDING MATERIAL SHALL BE PROCESSED MISC. BASE BELOW THE PIPE, AND HAND EXCAVATABLE, CONTROLLED LOW STRENGTH MATERIAL (CLSM) FROM THE BOTTOM OF THE PIPE TO 12" ABOVE THE TOP OF THE PIPE.
5. CONTROLLED LOW STRENGTH MATERIAL SHALL HAVE A MINIMUM/MAXIMUM 28 DAY COMPRESSIVE STRENGTH OF 100 PSI / 200 PSI RESPECTIVELY.
6. TRENCH BACKFILL SHALL BE EITHER CLSM, OR PROCESSED MISC. BASE, AT THE CONTRACTOR'S OPTION. NATIVE MATERIAL, SAND OR "PEA GRAVEL" TYPE MATERIALS ARE NOT PERMITTED AS BACK FILL.
7. BACKFILL COMPACTION REQUIREMENTS FOR PROCESSED MISC. BASE TRENCH BACKFILL ARE:
   - A: 95% RELATIVE COMPACTION WITHIN STREET RIGHT - OF - WAY.
   - B: 90% RELATIVE COMPACTION OUTSIDE STREET RIGHT - OF - WAY.
   - C: COMPACTION BY WATER JETTING IS NOT PERMITTED.

TYPICAL TRENCH SECTION	APPROVED BY:	
	DATE : JUNE 30, 2006	DWG. 16A-1

2006 STANDARD DETAILS

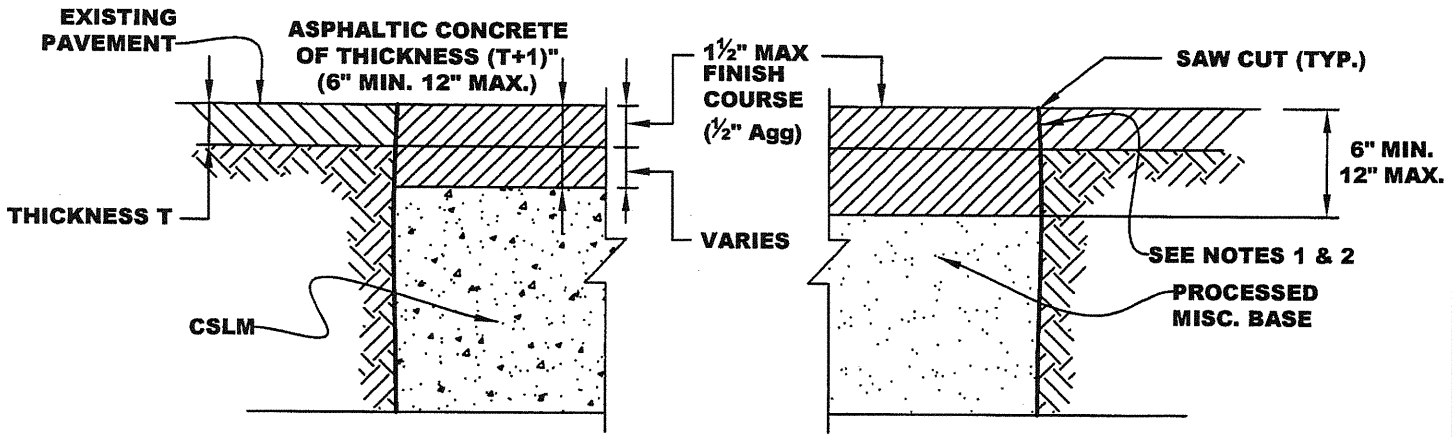

PERMANENT RESTORATION IN EXISTING PAVEMENT SURFACES (SEE NOTE 5)

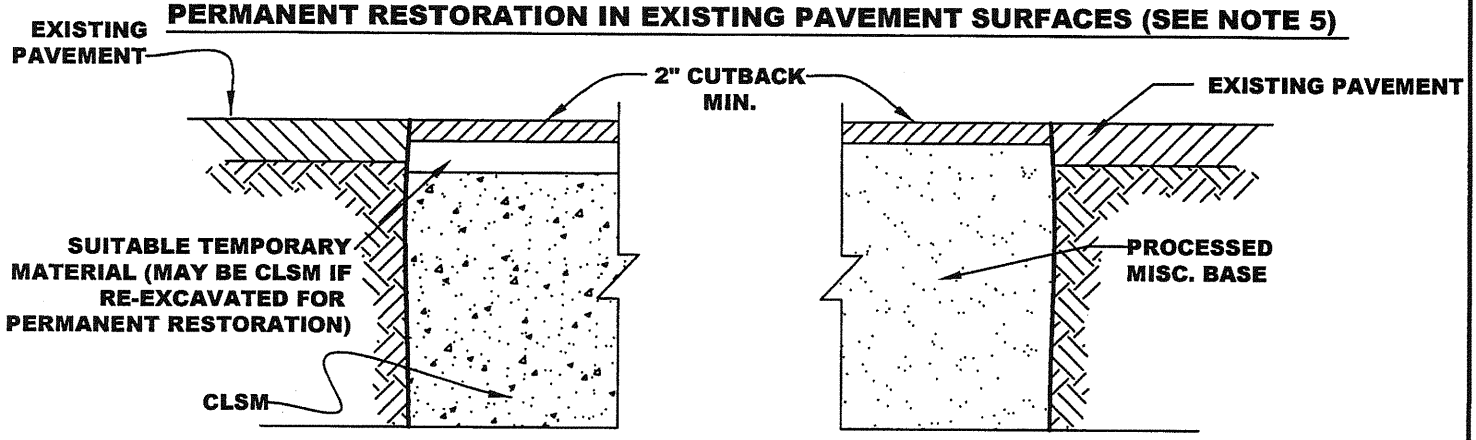

TEMPORARY RESTORATION IN EXISTING PAVEMENT SURFACES

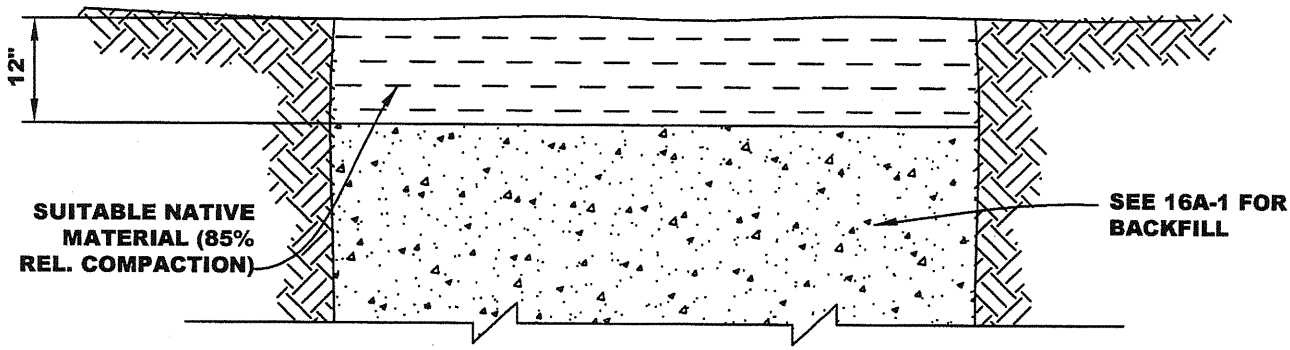

RESTORATION IN EXISTING NON-PAVED SURFACES

NOTES:

1. FOR EXISTING PAVEMENT, SAWCUT EDGE BEFORE EXCAVATION.
2. APPLY TACK COAT TO CUT EDGE OF EXISTING PAVEMENT.
3. FOR PAVED SURFACES FOR WHICH THE PERMANENT SURFACING CANNOT BE INSTALLED BEFORE RETURNING THE PAVEMENT TO USE BY THE PUBLIC, A TEMPORARY SURFACING OF 2" (MIN.) OF CUTBACK SHALL BE INSTALLED, FLUSH WITH THE ADJACENT PAVEMENT, UNTIL SUCH TIME AS THE PERMANENT SURFACING IS INSTALLED. TEMPORARY SURFACING SHALL BE CONSTRUCTED FLUSH WITH THE ADJACENT PAVEMENT AND SHALL BE MAINTAINED FLUSH.
4. TEMPORARY SURFACING SHALL NOT BE USED FOR MORE THAN TWO WEEKS.
5. STD. DETAIL 16A-3. MODIFIES THIS DETAIL IN SOME CASES.

TYPICAL TRENCH SURFACE RESTORATION 1 OF 2	APPROVED BY:	
	DATE : JUNE 30, 2006	DWG. 16A-2

2006 STANDARD DETAILS

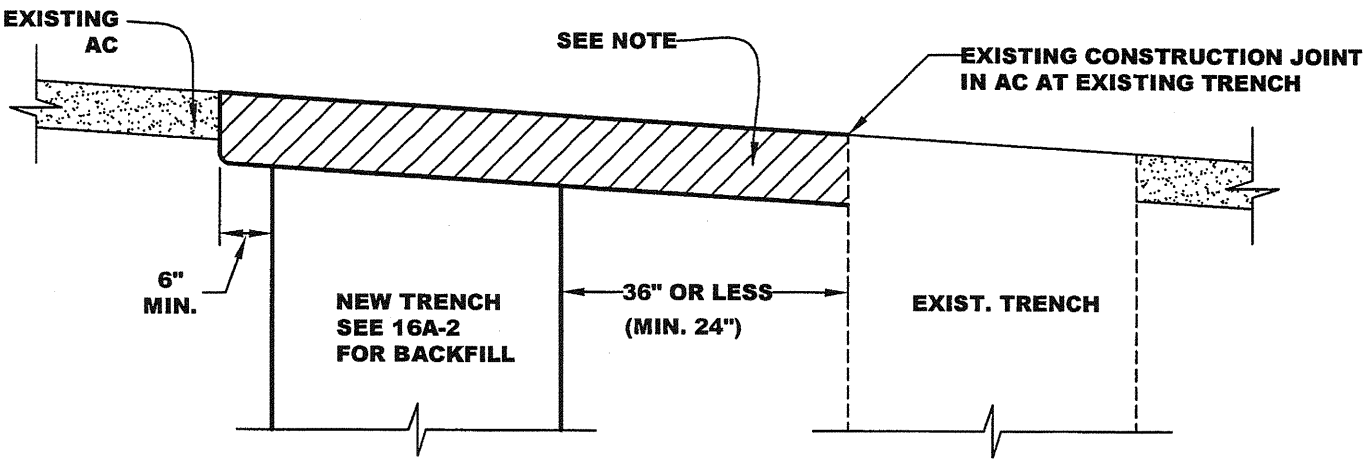

DETAIL 1 FOR TRENCH CONSTRUCTION 36" OR LESS FROM EXISTING TRENCH

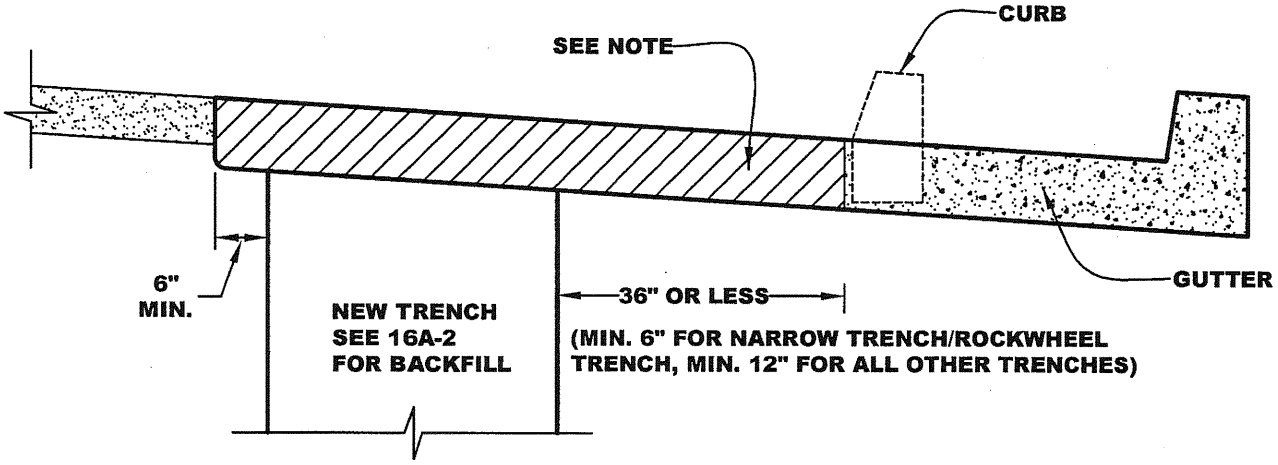

DETAIL 2 FOR TRENCH CONSTRUCTION W/IN 36" OF GUTTER (OR CURB)

NOTE: STD DETAILS 16A-2 & 16A-5 (FOR DIFFERENT TRENCH TYPES) SHOW RESTORED PAVEMENT DETAILS. THIS STD. DETAIL MODIFIES THE WIDTH OF THE PAVEMENT RESTORATION IN CERTAIN CASES

TYPICAL TRENCH SURFACE RESTORATION 2 OF 2	APPROVED BY:	
	DATE : JUNE 30, 2006	DWG. 16A-3

2006 STANDARD DETAILS

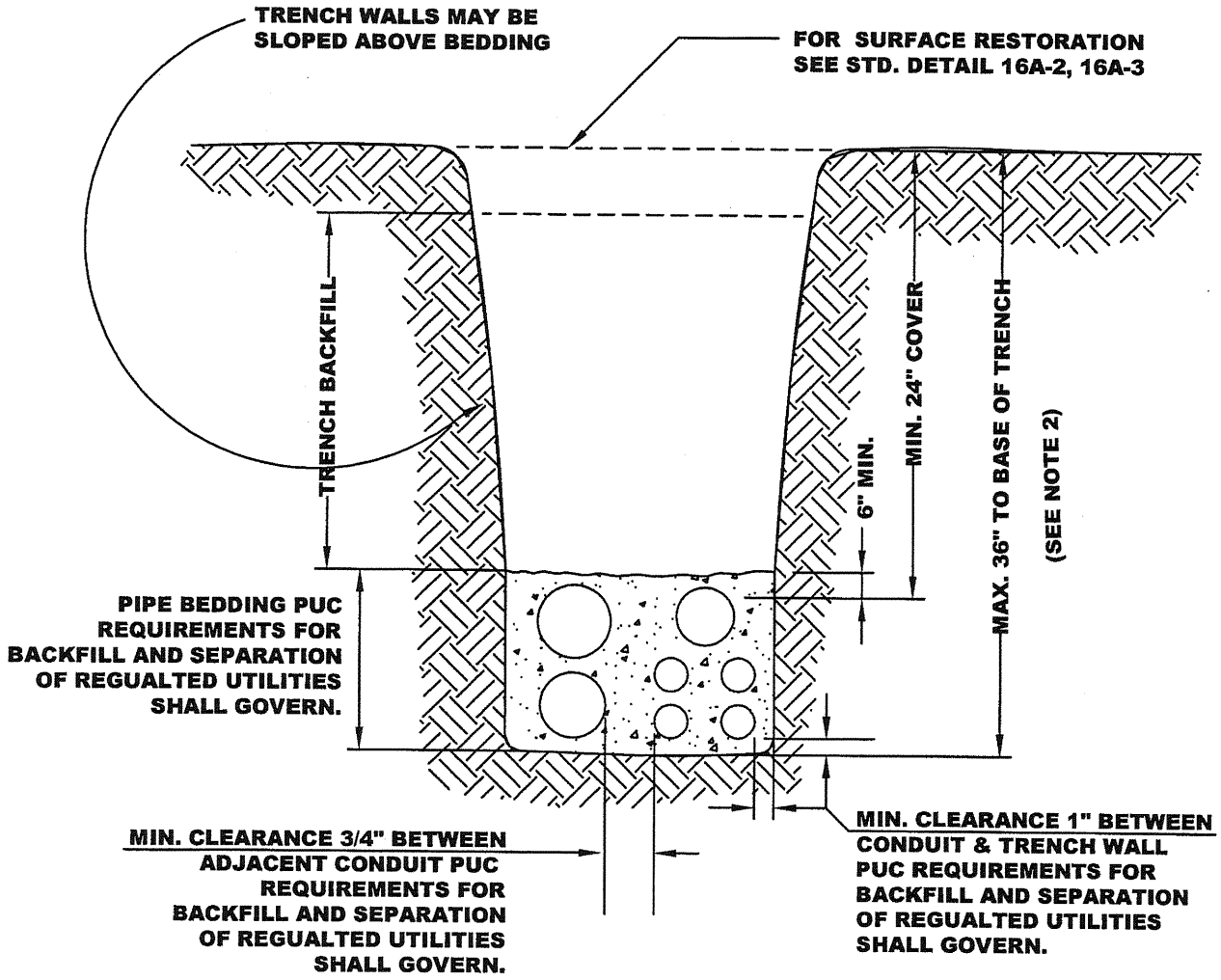

NOTES:

1. THIS DETAIL APPLIES FOR MULTIPLE UTILITY CONDUITS. (JOINT TRENCH)
2. FOR TRENCH DEPTHS GREATER THAN 36", OBTAIN CITY APPROVAL.
3. CONDUIT SHALL BE BEDDED FROM THE BOTTOM OF THE TRENCH TO 6" ABOVE THE UPPERMOST CONDUIT.
4. TRENCH BACKFILL SHALL BE PER 16A-2 OR EITHER CLSM OR PROCESSED MISC. BASE AT THE CONTRACTOR'S OPTION. NATIVE MATERIAL, SAND OR "PEA GRAVEL" TYPE MATERIALS ARE NOT PERMITTED AS BACKFILL.
5. COMPACTION REQUIREMENTS FOR PROCESSED MISC. BASE TRENCH ARE:
   A. 95% RELATIVE COMPACTION WITHIN STREET RIGHT - OF - WAY.
   B. 90% RELATIVE COMPACTION OUTSIDE STREET RIGHT - OF - WAY.

TYPICAL MULTIPLE UTILITY CONDUIT TRENCH SECTION	APPROVED BY:	
	DATE : JUNE 30, 2006	DWG. 16A-4

2006 STANDARD DETAILS

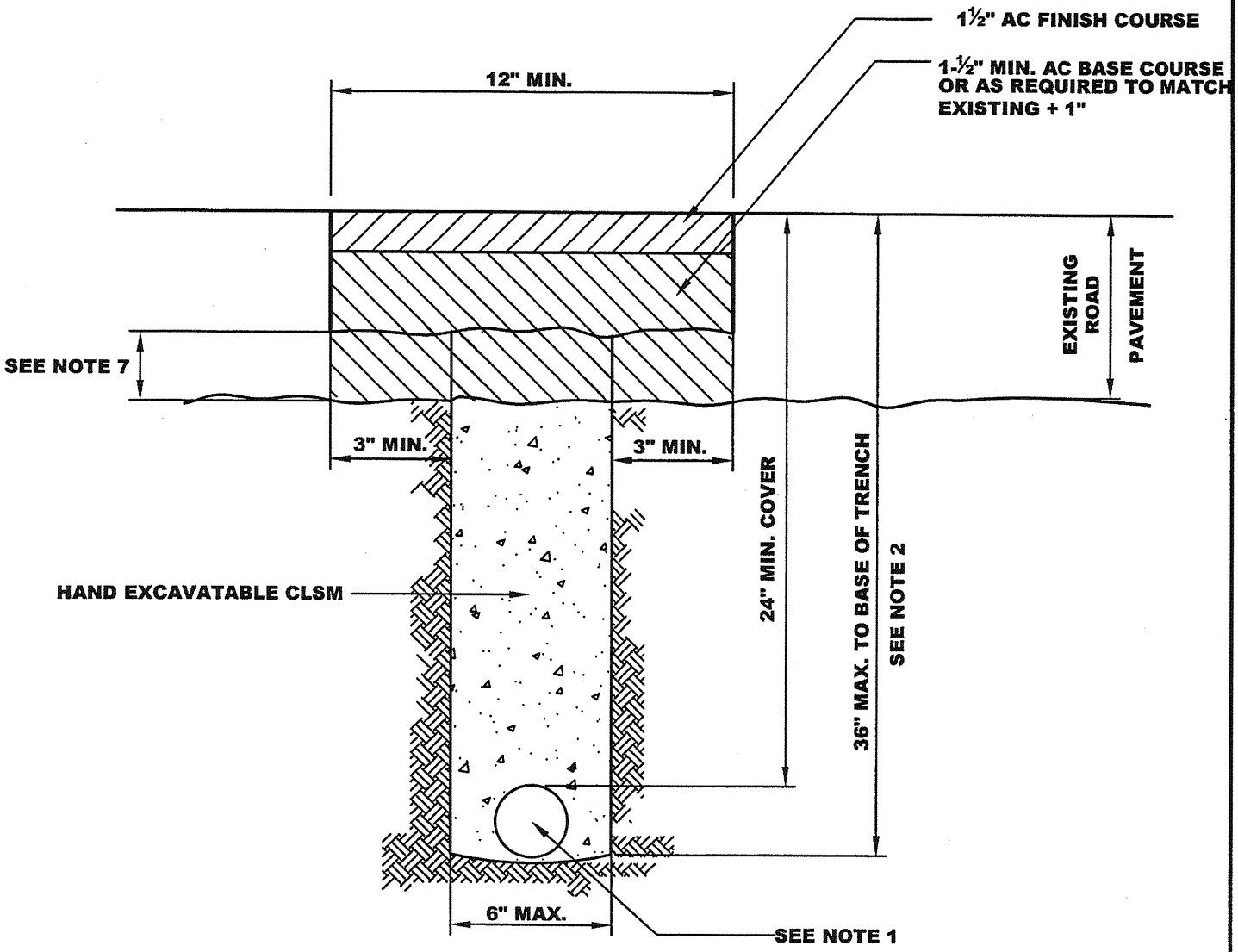

NOTES:

1. SINGLE OR MULTIPLE CONDUITS MAY BE USED. MINIMUM LATERAL CLEARANCE SHALL BE 1" BETWEEN CONDUITS OR CONDUITS/WALL OF TRENCH. MINIMUM VERTICAL CLEARANCE BETWEEN CONDUITS SHALL BE 3/4" . CONDUIT(S) MAY REST ON THE BOTTOM OF THE TRENCH.
2. FOR TRENCH DEPTHS GREATER THAN 36", OBTAIN CITY APPROVAL.
3. THE TRENCH SHALL BE BACKFILLED WITH HAND EXCAVATABLE CONTROLLED LOW STRENGTH MATERIAL (CLSM).
4. CLSM SHALL HAVE A MIN. / MAX. 28 DAY COMPRESSIVE STRENGTH OF 100 PSI / 200 PSI RESPECTIVELY.
5. 4" BASE ASPHALTIC CONCRETE SHALL BE 3/4" MAXIMUM (MEDIUM).
6. 1½" SURFACE ASPHALTIC CONCRETE SHALL BE 1/2" MAXIMUM (MEDIUM)
7. SEE STD. DETAIL 16A - 3 (SHEET 2 OF 2) WHICH MAY MODIFY THE PAVEMENT RESTORATION DETAIL, DEPENDING ON LOCATION OF THE TRENCH RELATIVE TO OTHER FEATURES.

TYPICAL NARROW TRENCH/ROCKWHEEL UTILITY CONDUIT TRENCH DETAIL	APPROVED BY:	
	DATE : JUNE 30, 2006	DWG. 16A-5

2006 STANDARD DETAILS

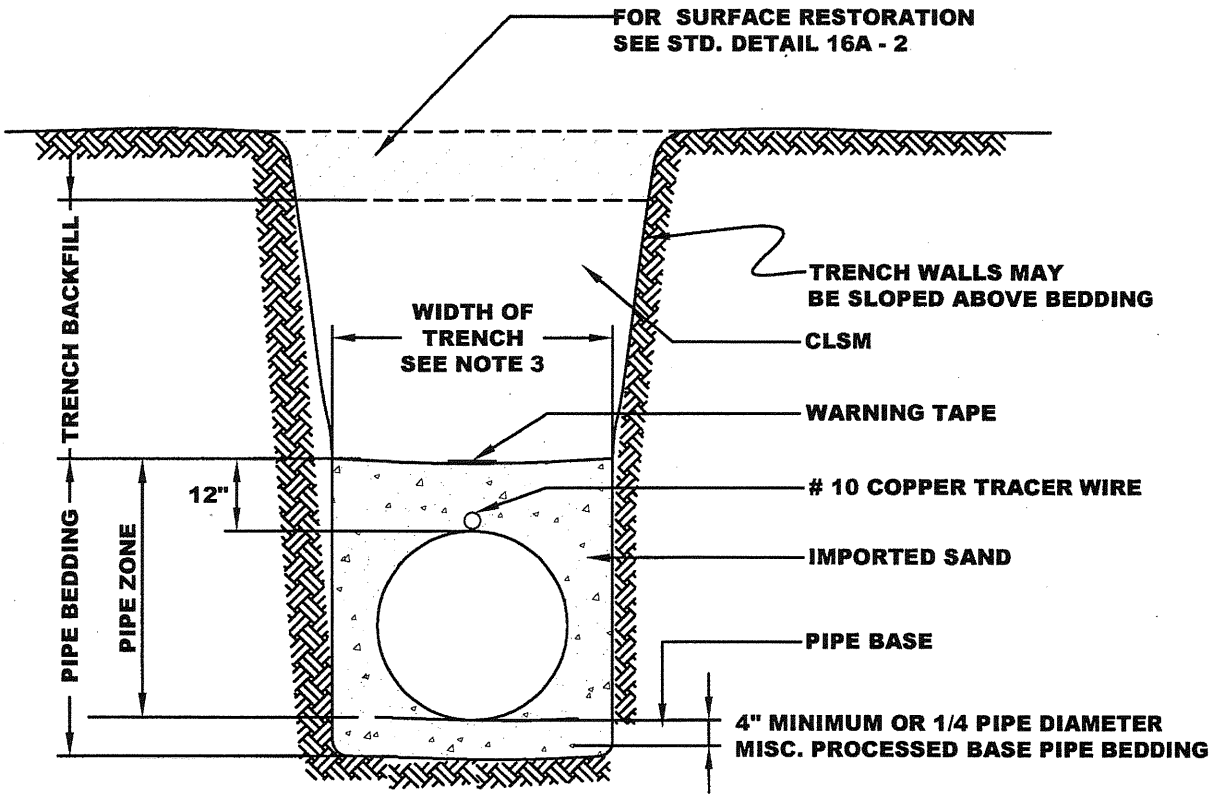

NOTES:

1. THIS DETAIL APPLIES TO ALL PIPES 6" NOM. DIAMETER AND GREATER.
2. TRENCH WIDTH SHALL BE NOT MORE THAN 18" WIDER THAN THE LARGEST OUTSIDE DIAMETER OF THE PIPE. THERE SHALL BE A MINIMUM OF 6" CLEARANCE ON EACH SIDE OF THE PIPE AT THE LARGEST OUTSIDE DIAMETER.
3. PIPE SHALL BE BEDDED FROM BELOW THE BOTTOM OF THE PIPE TO 12" ABOVE THE TOP OF THE PIPE.
4. BEDDING MATERIAL SHALL BE PROCESSED MISC. BASE BELOW THE PIPE.
5. CONTROLLED LOW STRENGTH MATERIAL SHALL HAVE A MINIMUM/MAXIMUM 28 DAY COMPRESSIVE STRENGTH OF 100 PSI / 200 PSI RESPECTIVELY.
6. TRENCH BACKFILL SHALL BE CLSM. NATIVE MATERIAL, SAND OR "PEA GRAVEL" TYPE MATERIALS ARE NOT PERMITTED AS BACK FILL.
7. BACKFILL COMPACTION REQUIREMENTS FOR PROCESSED MISC. BASE TRENCH BACKFILL ARE:
   - A: 95% RELATIVE COMPACTION WITHIN STREET RIGHT - OF - WAY.
   - B: 90% RELATIVE COMPACTION OUTSIDE STREET RIGHT - OF - WAY.
   - C: COMPACTION BY WATER JETTING IS NOT PERMITTED.

TYPICAL TRENCH SECTION (PVC WATER PIPES)	APPROVED BY:	
	DATE ADDED : SEPT, 2006	DWG. 16A-6

2006 STANDARD DETAILS