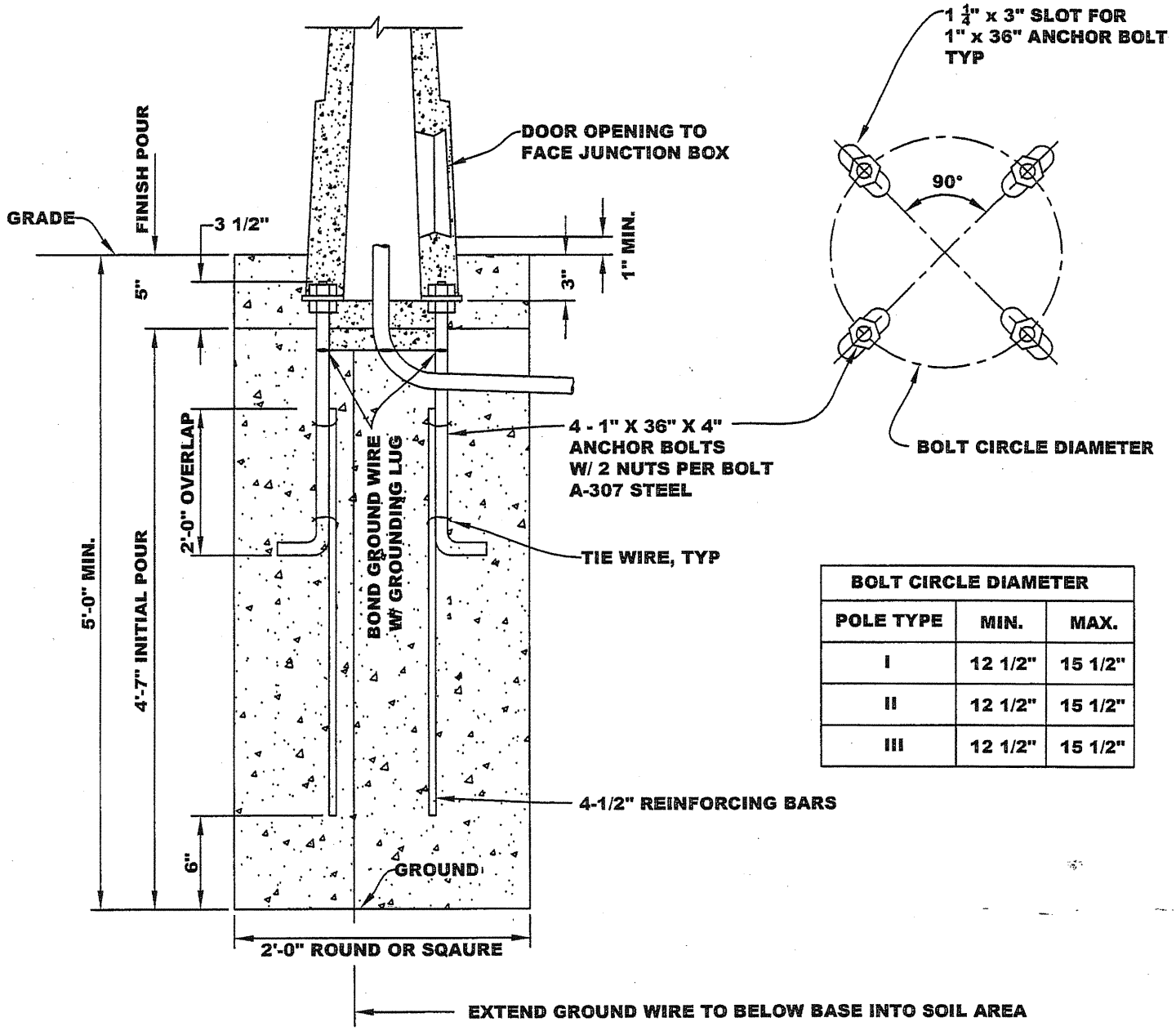

BOLT CIRCLE DIAMETER		
POLE TYPE	MIN.	MAX.
I	12 1/2"	15 1/2"
II	12 1/2"	15 1/2"
III	12 1/2"	15 1/2"

NOTES:

1. FINISH POUR SHALL BE MADE ONLY AFTER ELECTROLIER STANDARD HAS BEEN RAISED AND PLUMBED, LUMINAIRES LEVELED AND ALL WORK INSPECTED.

2. PCC FINISH SHALL BE TO GRADE AND SHALL NOT CREATE TRIPPING HAZARD (IN SIDEWALK AND SOIL INSTALLATIONS).

ELECTROLIER FOUNDATION

Marvin A. Rao
APPROVED BY:

DATE : JUNE 30, 2006
REVISED : JUNE, 2007

DWG. 1D-1

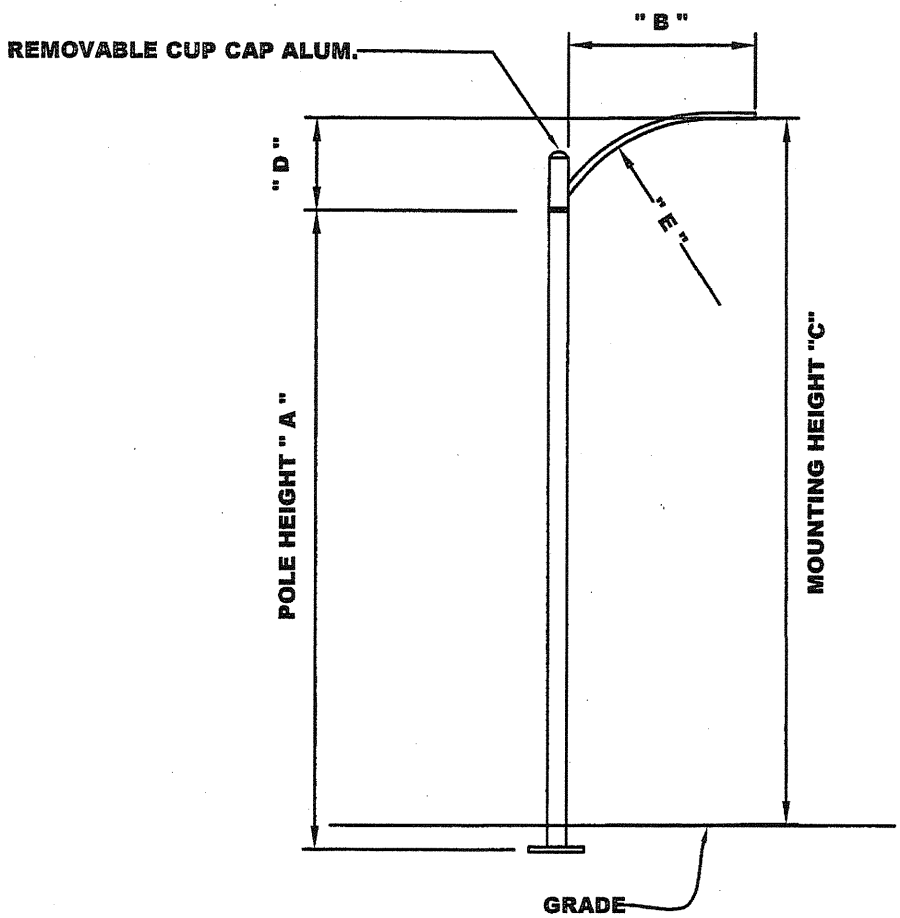

POLE TYPE		A	B	C	D	E
TYPE I	4' ARM	25' - 1"	4' - 0"	26' - 9"	1' - 11"	4' - 8 1/2"
	6' ARM	25' - 1"	6' - 0"	27' - 6"	2' - 8"	7' - 6 1/4"
	8' ARM	25' - 1"	8' - 0"	28' - 4"	3' - 6"	10' - 6"
TYPE II	4' ARM	26' - 7"	4' - 0"	28' - 3"	1' - 11"	4' - 8 1/2"
	6' ARM	26' - 7"	6' - 0"	29' - 0"	2' - 8"	7' - 6 1/4"
	8' ARM	26' - 7"	8' - 0"	29' - 10"	3' - 6"	10' - 6"
TYPE III	4' ARM	30' - 0"	4' - 0"	31' - 9"	1' - 11"	4' - 8 1/2"
	6' ARM	30' - 0"	6' - 0"	32' - 5"	2' - 8"	7' - 6 1/4"
	8' ARM	30' - 0"	8' - 0"	33' - 3"	3' - 6"	10' - 6"

ELECTROILER POLES

Marvin A. Rios
APPROVED BY:

DATE : JUNE 30, 2006
REVISED : JUNE, 2007

DWG. 1D-2

2006 STANDARD DETAILS

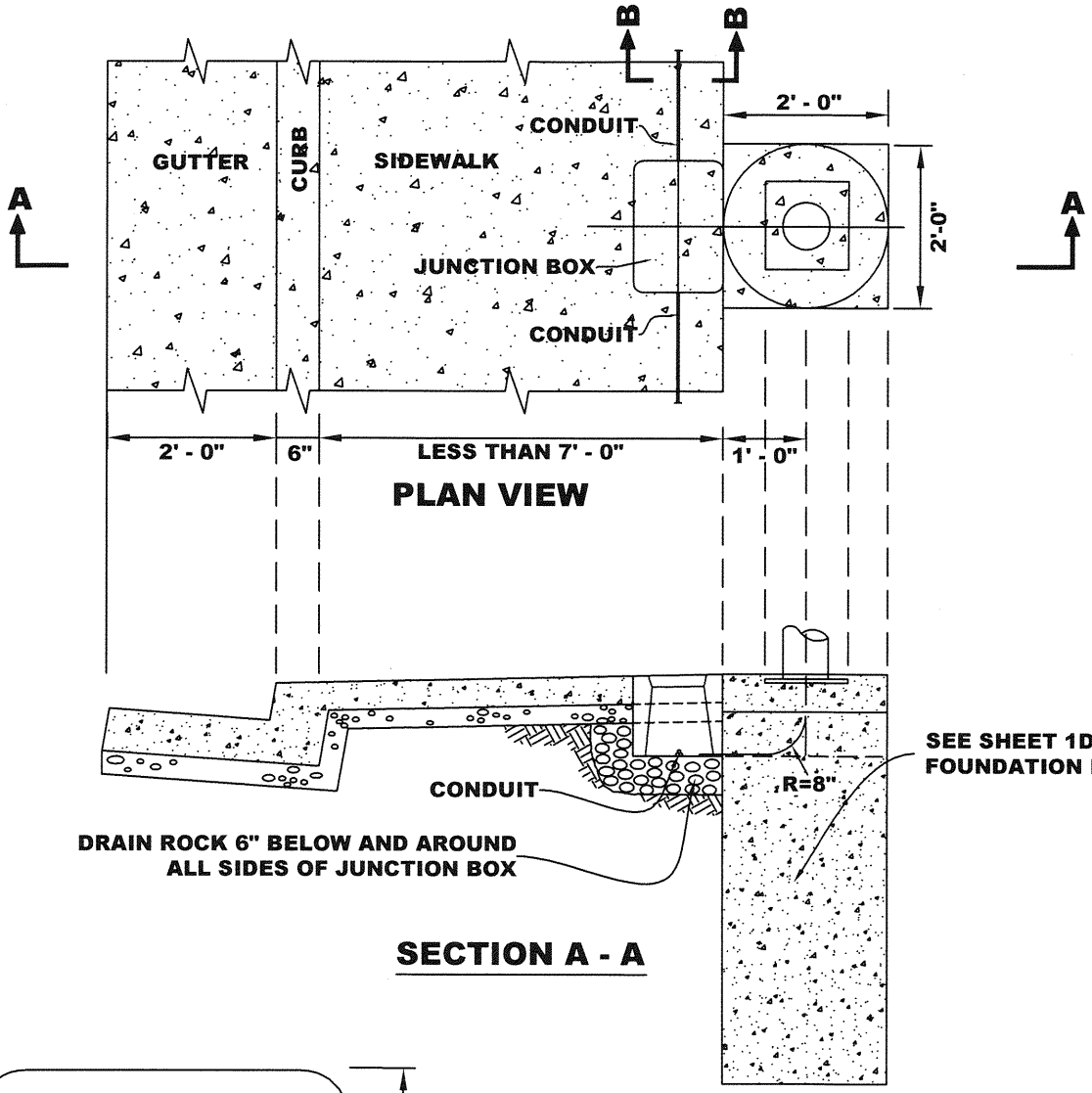

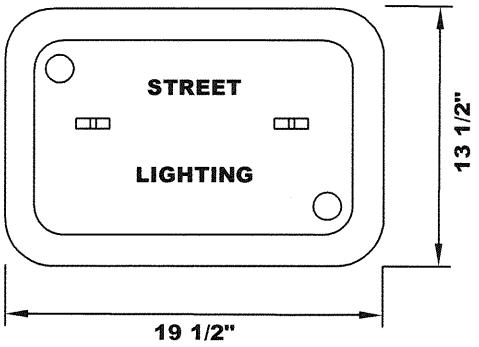

JUNCTION BOX
STATE OF CALIF. STD. #3 1/2

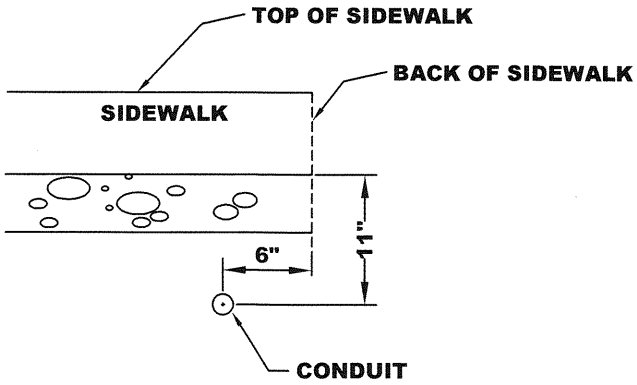

SECTION B - B

NOTES:

1. FOR LOCATIONS WITH WIDER MONOLITHIC SIDEWALKS AND NON-MONOLITHIC SIDEWALKS, SEE STANDARD DETAIL 2D-2.
2. IF THERE IS NO SIDEWALK, LOCATE IN ACCORDANCE WITH THIS STANDARD DETAIL WITH THE FOUNDATION CENTERED 6' - 6" FROM FACE OF CURB.

ELECTROLIER AND CONDUIT INSTALLATION - SHEET 1 OF 2	APPROVED BY:	
	DATE : JUNE 30, 2006 REVISED: : APRIL, 2013	DWG. 2D-1

2006 STANDARD DETAILS

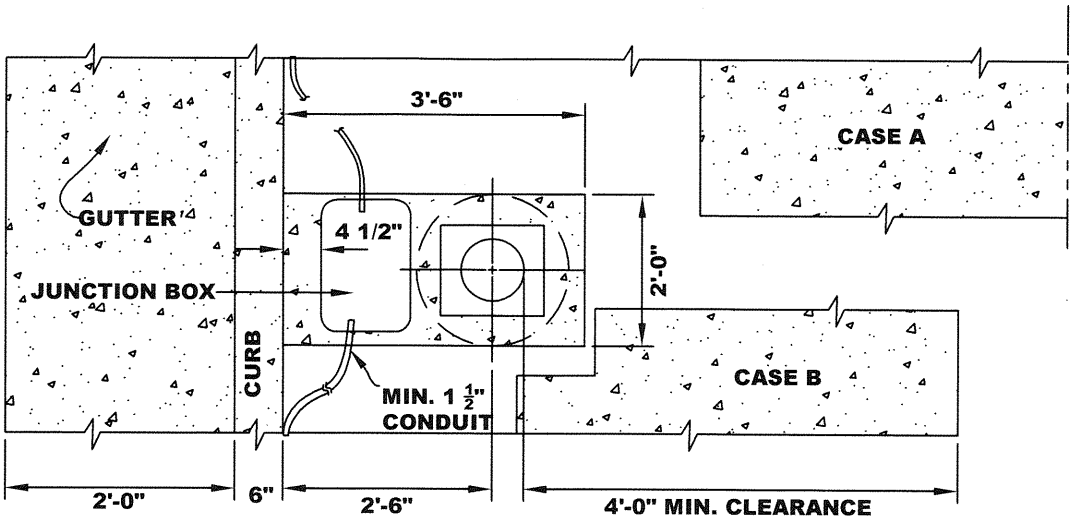

NON-MONOLITHIC SIDEWALK

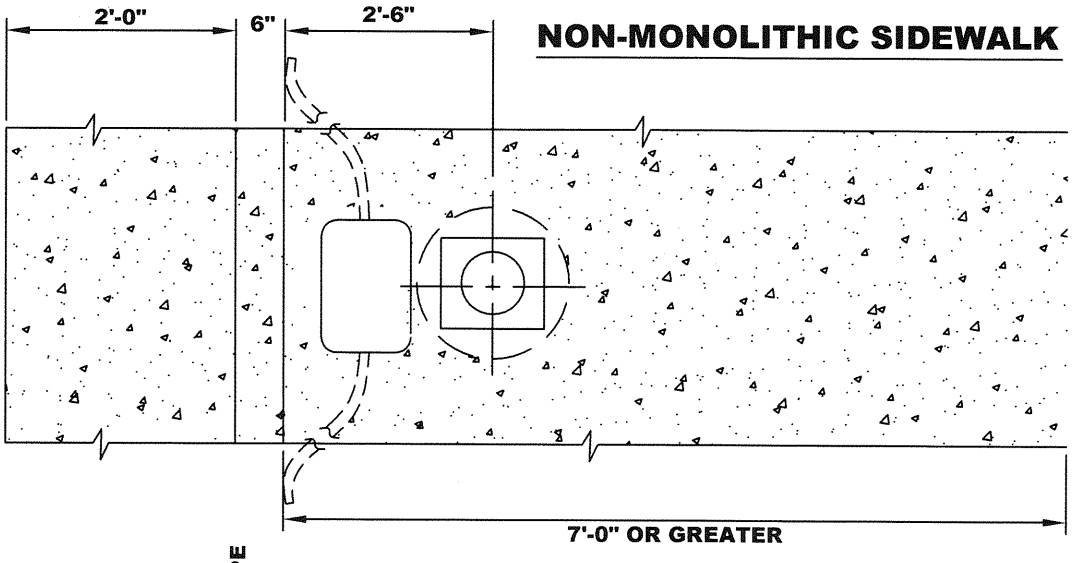

MONOLITHIC SIDEWALK

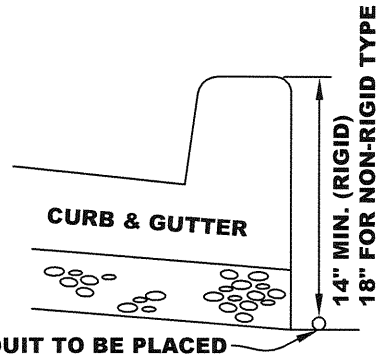

CONDUIT TO BE PLACED ON SUBGRADE BY TRENCHING OR PRIOR TO PLACEMENT OF PROCESSED MISC. BASE FOR CURB & GUTTER

NOTES:

1. FOR NON-MONOLITHIC SIDEWALK.
   CASE A: APPLIES IF FRONT OF SIDEWALK IS AT LEAST 4'-0" FROM FACE OF CURB.
   CASE B: APPLIES IF FRONT OF SIDEWALK IS LESS THAN 4'-0" FROM FACE OF CURB, AND THERE IS A MINIMUM OF 4'-0" CLEAR SIDEWALK BETWEEN POLE AND BACK OF SIDEWALK. IF THIS 4'-0" MINIMUM CLEAR SIDEWALK CANNOT BE ACHIEVED, STANDARD DETAIL 2D-1 SHALL BE USED (i.e., INSTALL ELECTROLIER BEHIND THE SIDEWALK).
2. FOR MONOLITHIC SIDEWALKS LESS THAN 7'-0" WIDE USE STANDARD DETAIL 2D-1
3. DRAIN ROCK AROUND JUNCTION BOX AS SHOWN IN STD. DETAIL 1D.

2006 STANDARD DETAILS

ELECTROLIER AND CONDUIT INSTALLATION - SHEET 2 OF 2	APPROVED BY:	
	DATE : JUNE 30, 2006 REVISED : APRIL, 2013	DWG. 2D-2

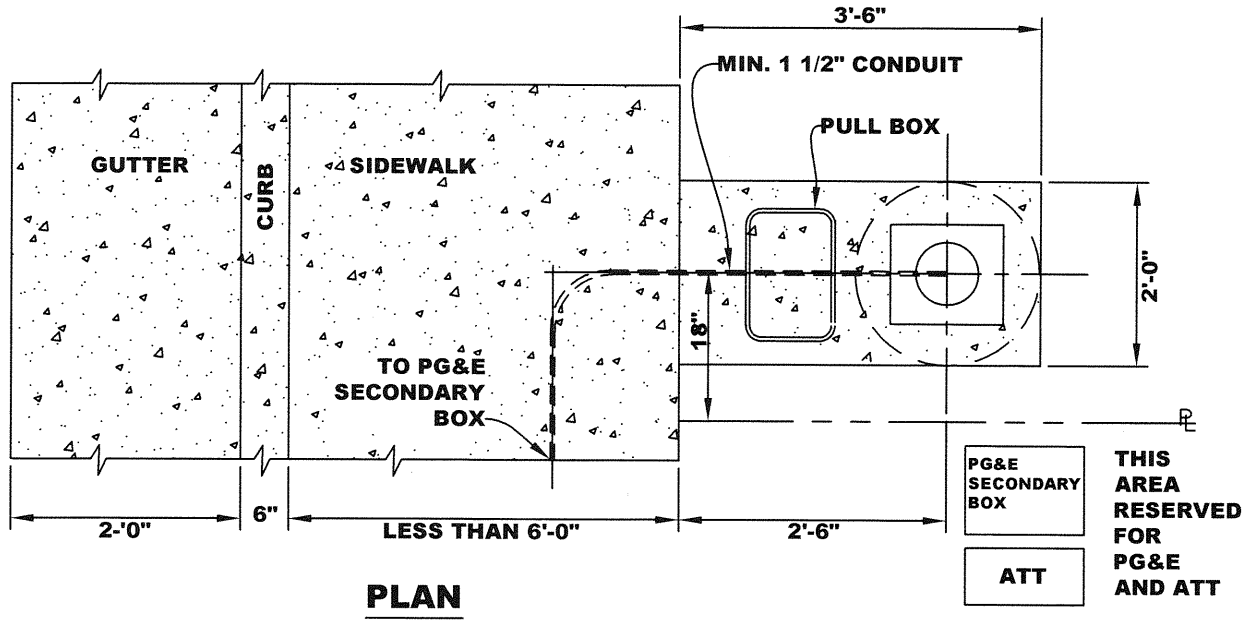

PLAN

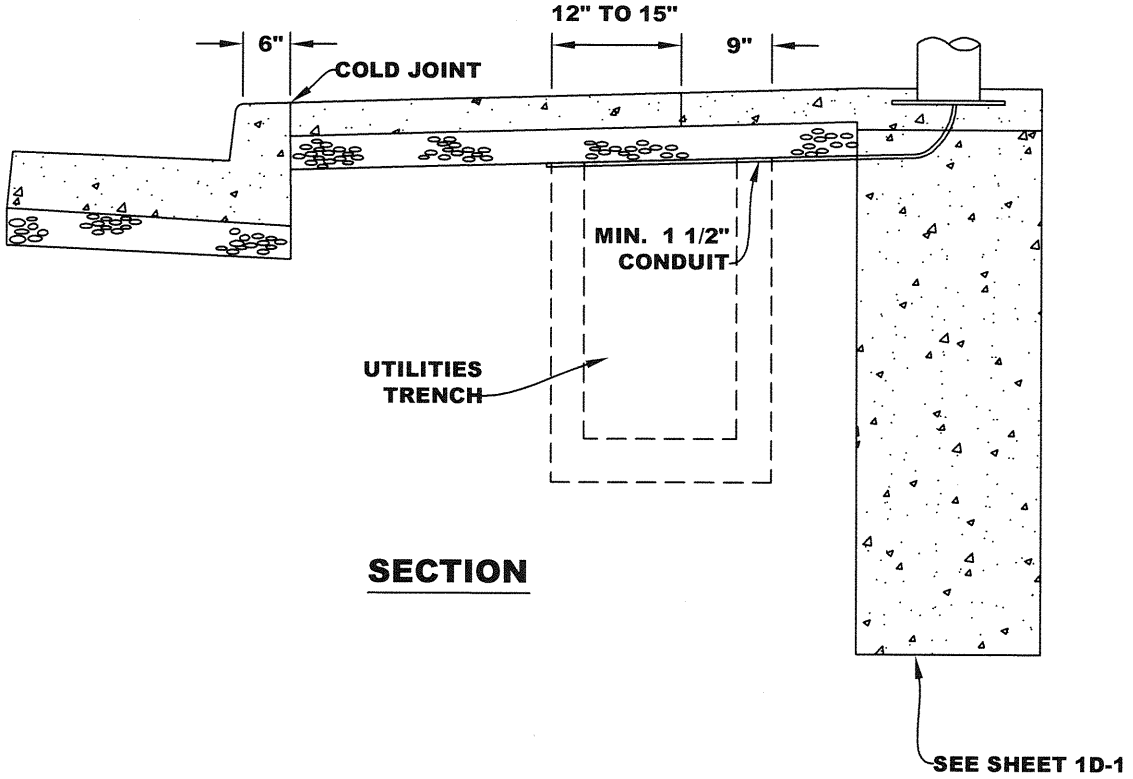

SECTION

2006 STANDARD DETAILS

ELECTROLIER AND CONDUIT LOCATION

(SUBDIVISIONS SERVED BY UNDERGROUND PG&E POWER DISTRIBUTION SYSTEM)

APPROVED BY:

DATE : JUNE 30, 2006
REVISED : APRIL, 2013

DWG. 3D

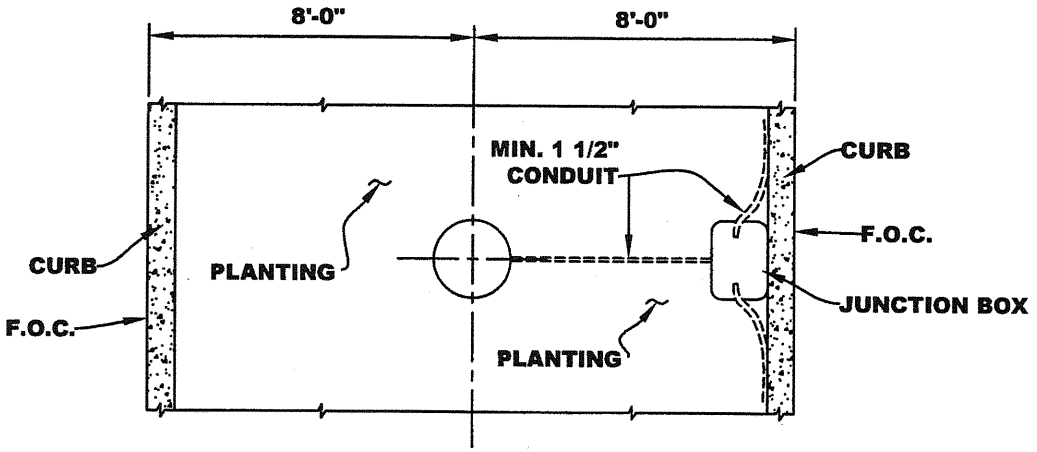

PLAN VIEW

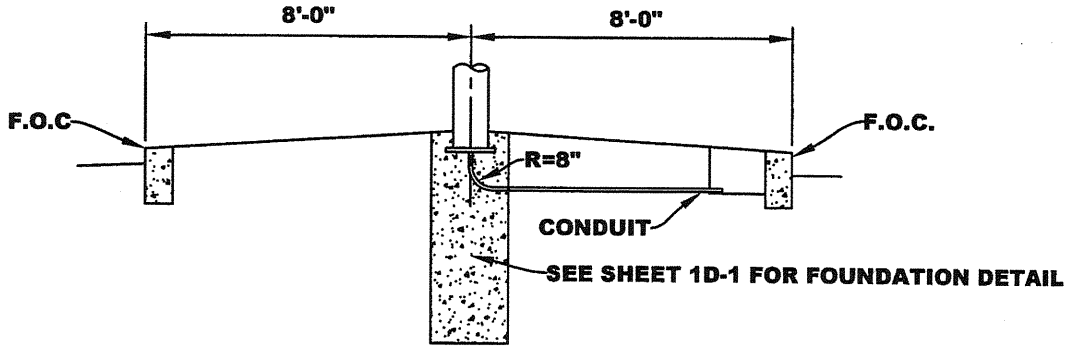

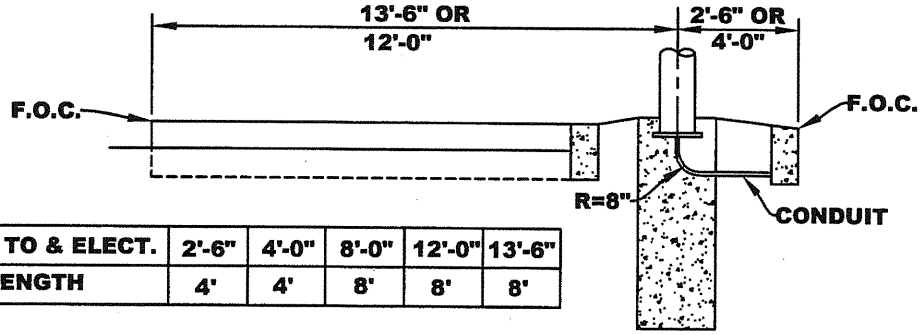

F.O.C. TO & ELECT.	2'-6"	4'-0"	8'-0"	12'-0"	13'-6"
ARM LENGTH	4'	4'	8'	8'	8'

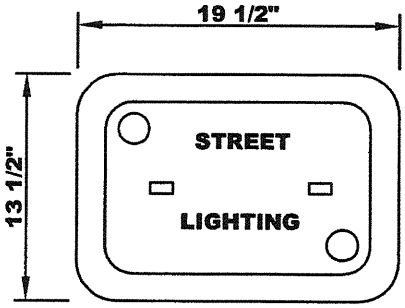

JUNCTION BOX
STAT OF CALIF. STD. #3 1/2

NO SCALE

SECTION

CONDUIT TO BE PLACED ON SUBGRADE BY TRENCHING OR PRIOR TO PLACEMENT OF AGGREGATE BASE MATERIAL FOR CURB & GUTTER

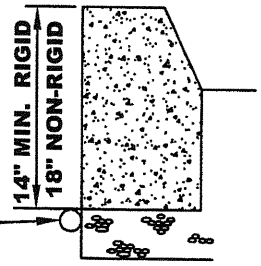

2006 STANDARD DETAILS

ELECTROLIER AND CONDUIT LOCATION IN MEDIAN ISLANDS

APPROVED BY: Marvin A. Rae

DATE : JUNE 30, 2006
REVISED : APRIL, 2007

DWG. 5D