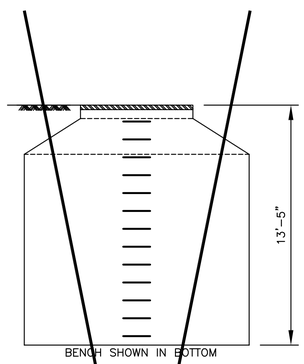

UNROLLED WALL SECTION

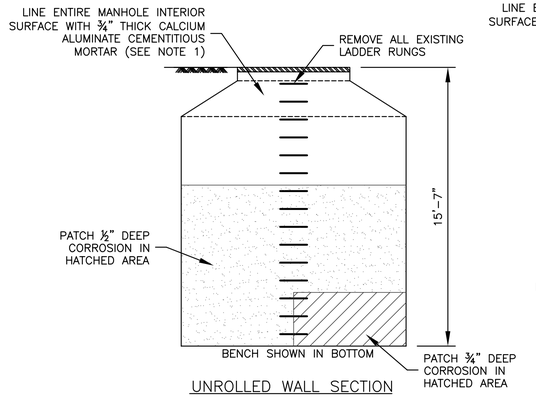

UNROLLED WALL SECTION

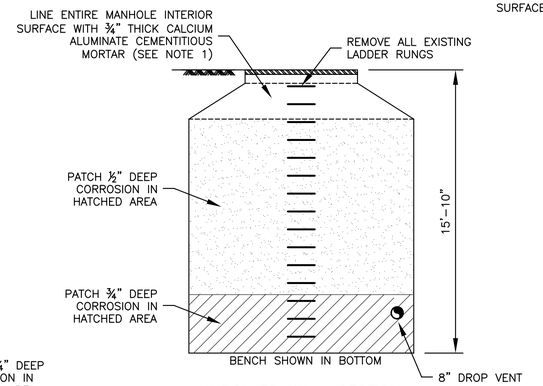

UNROLLED WALL SECTION

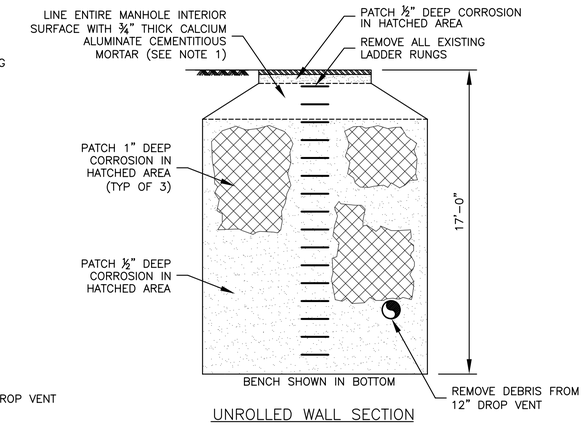

UNROLLED WALL SECTION

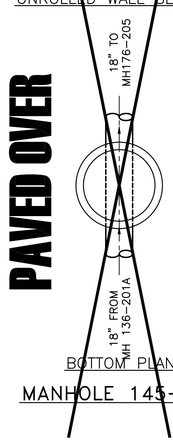

BOTTOM PLAN

MANHOLE 145-201

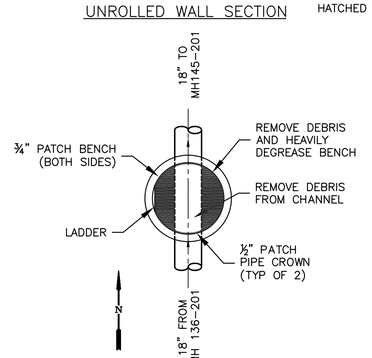

BOTTOM PLAN

MANHOLE 136-201A

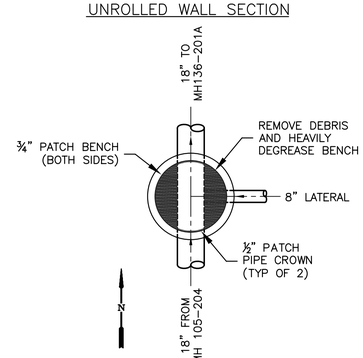

BOTTOM PLAN

MANHOLE 136-201

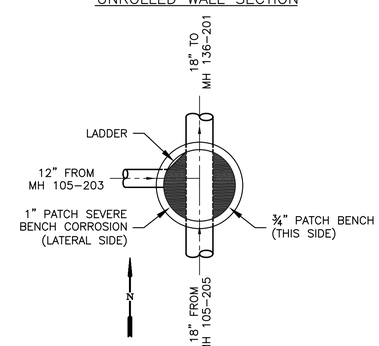

BOTTOM PLAN

MANHOLE 105-204

NOTES:

1. LINE ENTIRE MANHOLE INTERIOR SURFACE WITH ¾" THICK CALCIUM ALUMINATE CEMENTITIOUS MORTAR LINING. MATERIAL SHALL BE PLACED IN ADDITION TO SPECIFIED THICKNESS OF PATCHING MATERIAL. TOTAL APPLIED THICKNESS OF MATERIAL APPLIED TO MANHOLE SHALL BE THE REQUIRED THICKNESS OF THE PATCHING MATERIAL PLUS THE ¾" THICK LINING MATERIAL THICKNESS.

2. LADDER RUNGS SHALL BE REMOVED TO FLUSH WITH MANHOLE WALL SURFACE. ANY HOLES OR VOIDS CREATED SHALL BE PATCHED FLUSH WITH MANHOLE WALL.

Rev.	Description	Date
G	RECORD DRAWINGS	3/5/07

LEE&RO, Inc.
Walnut Creek, California

Scale	1/4"=1'-0"
Designed By:	TJB
Drawn By:	JMP
Checked By:	BOG
Consultant's Job No.	610-01

REHABILITATION OF MANHOLES
LAWRENCE TRUNK SEWER

MANHOLE PLAN AND SECTIONS – (9)

CITY OF SUNNYVALE CALIFORNIA

City of Sunnyvale
Santa Clara County
California

Department of Public Works
456 West Olive Avenue
P.O. Box 3707
Sunnyvale 94088-3707

City of Sunnyvale
Project No.
UY-02/05-03

Drawing No.
C-16

Sheet 18 of 25

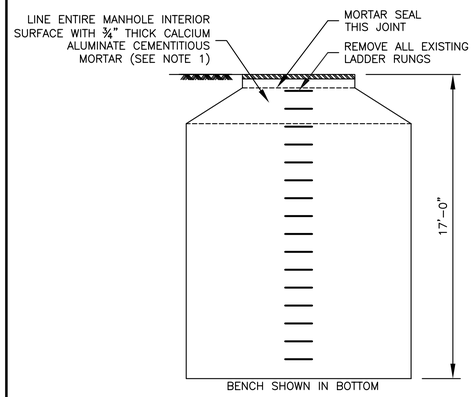

UNROLLED WALL SECTION

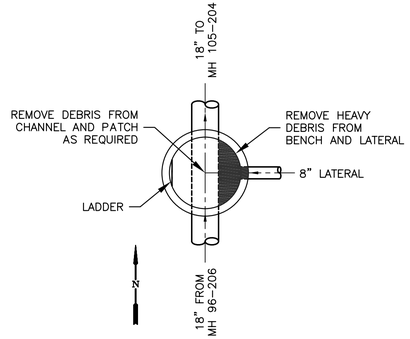

BOTTOM PLAN

MANHOLE 105-205

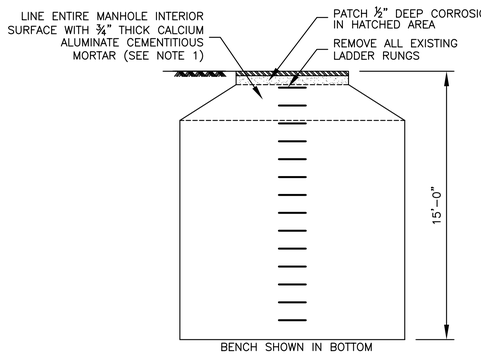

UNROLLED WALL SECTION

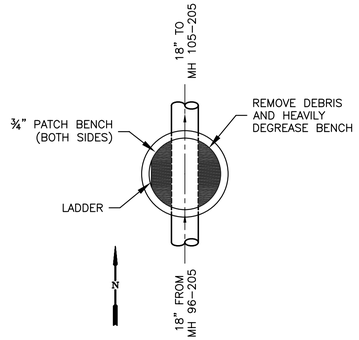

BOTTOM PLAN

MANHOLE 96-206

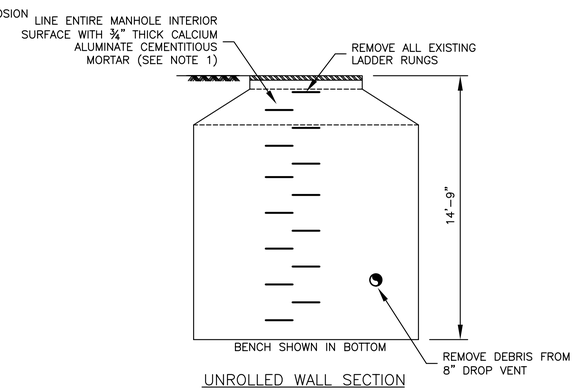

UNROLLED WALL SECTION

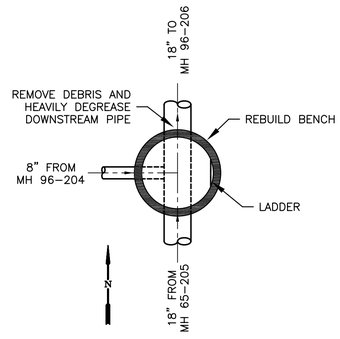

BOTTOM PLAN

MANHOLE 96-205

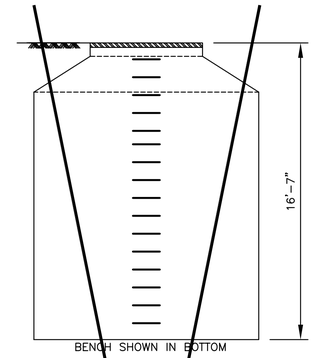

UNROLLED WALL SECTION

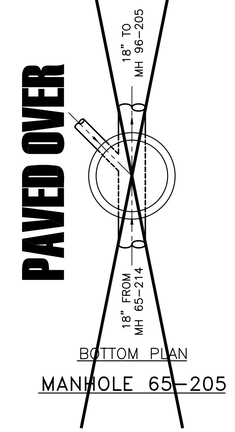

BOTTOM PLAN

MANHOLE 65-205

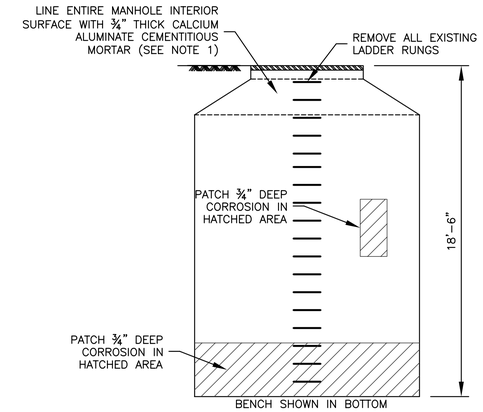

UNROLLED WALL SECTION

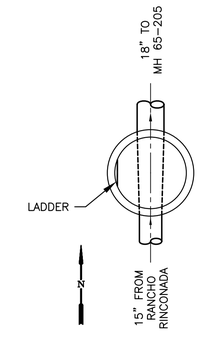

BOTTOM PLAN

MANHOLE 65-214

NOTES:

1. LINE ENTIRE MANHOLE INTERIOR SURFACE WITH ¾" THICK CALCIUM ALUMINATE CEMENTITIOUS MORTAR LINING. MATERIAL SHALL BE PLACED IN ADDITION TO SPECIFIED THICKNESS OF PATCHING MATERIAL. TOTAL APPLIED THICKNESS OF MATERIAL APPLIED TO MANHOLE SHALL BE THE REQUIRED THICKNESS OF THE PATCHING MATERIAL PLUS THE ¾" THICK LINING MATERIAL THICKNESS.

2. LADDER RUNGS SHALL BE REMOVED TO FLUSH WITH MANHOLE WALL SURFACE. ANY HOLES OR VOIDS CREATED SHALL BE PATCHED FLUSH WITH MANHOLE WALL.

Rev.	Description	Date
G	RECORD DRAWINGS	3/5/07

LEE&RO, Inc.
Walnut Creek, California

Scale	1/4"=1'-0"
Designed By:	TJB
Drawn By:	JMP
Checked By:	BOG
Consultant's Job No.	610-01

REHABILITATION OF MANHOLES
LAWRENCE TRUNK SEWER

MANHOLE PLAN AND SECTIONS – (10)

CITY OF SUNNYVALE CALIFORNIA

City of Sunnyvale
Santa Clara County
California

Department of Public Works
456 West Olive Avenue
P.O. Box 3707
Sunnyvale 94088-3707

City of Sunnyvale
Project No.
UY-02/05-03

Drawing No.
C-17

Sheet 19 of 25

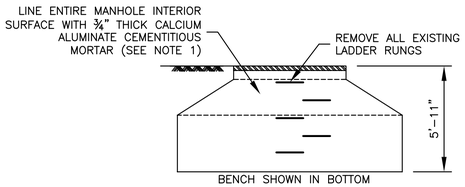

UNROLLED WALL SECTION

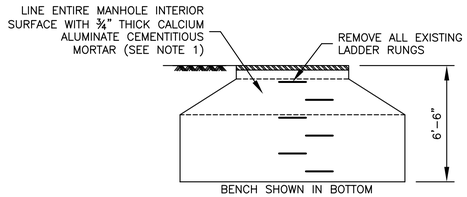

UNROLLED WALL SECTION

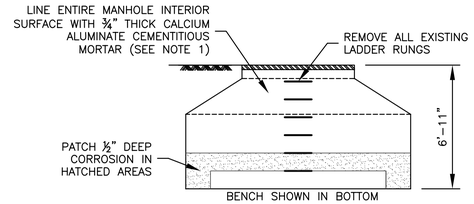

UNROLLED WALL SECTION

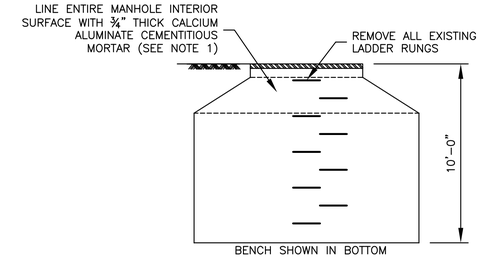

UNROLLED WALL SECTION

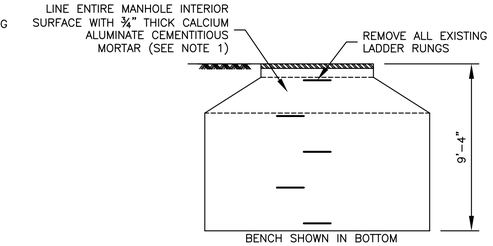

UNROLLED WALL SECTION

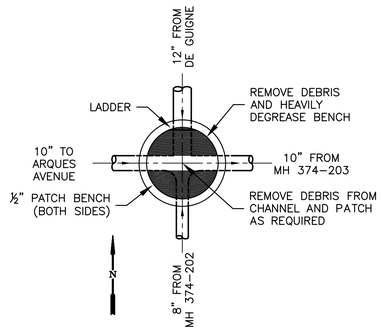

BOTTOM PLAN

MANHOLE 374-201

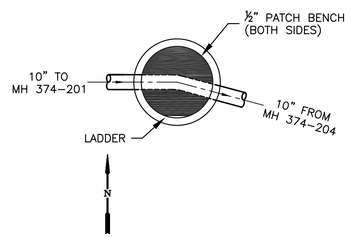

BOTTOM PLAN

MANHOLE 374-203

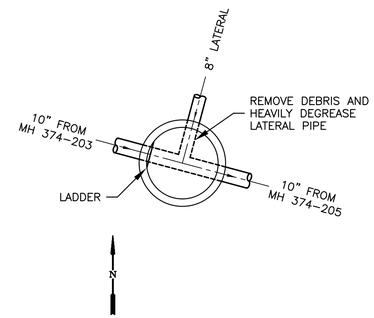

BOTTOM PLAN

MANHOLE 374-204

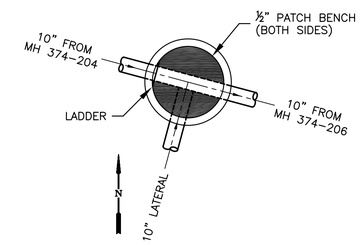

BOTTOM PLAN

MANHOLE 374-205

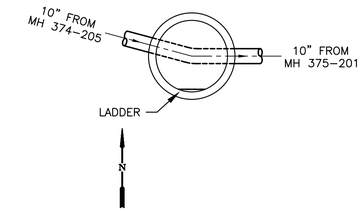

BOTTOM PLAN

MANHOLE 374-206

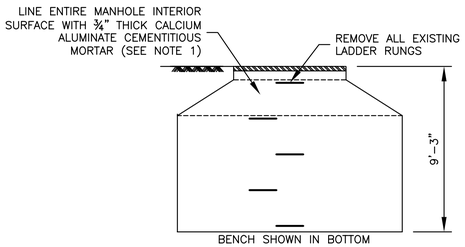

UNROLLED WALL SECTION

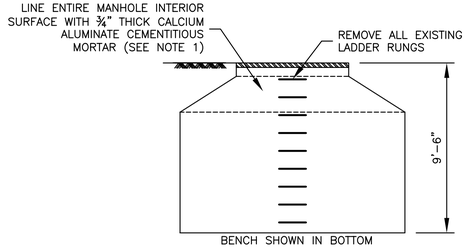

UNROLLED WALL SECTION

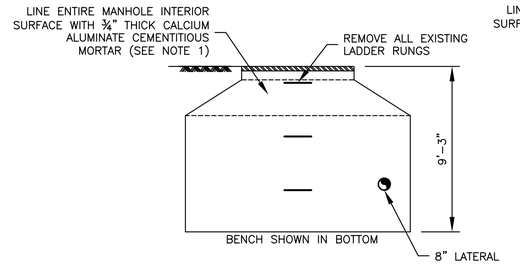

UNROLLED WALL SECTION

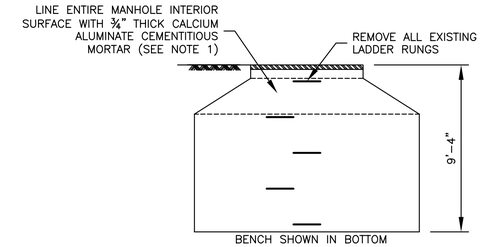

UNROLLED WALL SECTION

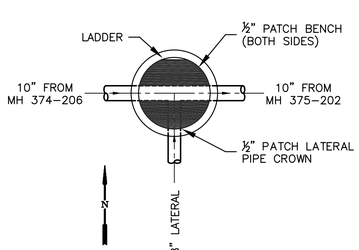

BOTTOM PLAN

MANHOLE 375-201

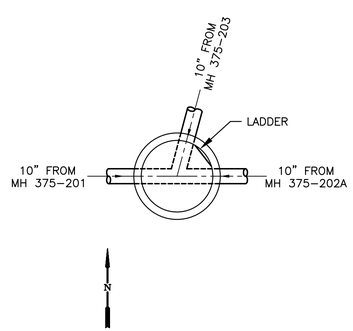

BOTTOM PLAN

MANHOLE 375-202

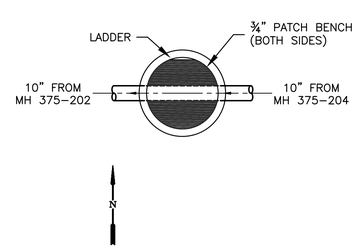

BOTTOM PLAN

MANHOLE 375-202A

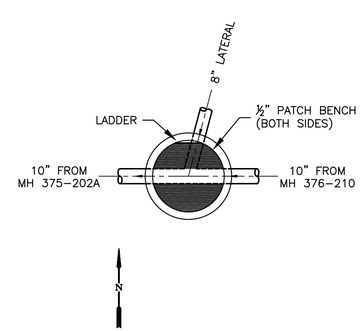

BOTTOM PLAN

MANHOLE 375-204

NOTES:

1. LINE ENTIRE MANHOLE INTERIOR SURFACE WITH ¾" THICK CALCIUM ALUMINATE CEMENTITIOUS MORTAR LINING. MATERIAL SHALL BE PLACED IN ADDITION TO SPECIFIED THICKNESS OF PATCHING MATERIAL. TOTAL APPLIED THICKNESS OF MATERIAL APPLIED TO MANHOLE SHALL BE THE REQUIRED THICKNESS OF THE PATCHING MATERIAL PLUS THE ¾" THICK LINING MATERIAL THICKNESS.

2. LADDER RUNGS SHALL BE REMOVED TO FLUSH WITH MANHOLE WALL SURFACE. ANY HOLES OR VOIDS CREATED SHALL BE PATCHED FLUSH WITH MANHOLE WALL.

Rev.	Description	Date
G	RECORD DRAWINGS	3/5/07

LEE&RO, Inc.
Walnut Creek, California

Scale	1/4"=1'-0"
Designed By:	TJB
Drawn By:	JMP
Checked By:	BOG
Consultant's Job No.	610-01

REHABILITATION OF MANHOLES
LAWRENCE TRUNK SEWER

MANHOLE PLAN AND SECTIONS – (10)

CITY OF SUNNYVALE CALIFORNIA

City of Sunnyvale
Santa Clara County
California

Department of Public Works
456 West Olive Avenue
P.O. Box 3707
Sunnyvale 94088-3707

City of Sunnyvale Project No.
UY-02/05-03

Drawing No.
C-18

Sheet 20 of 25

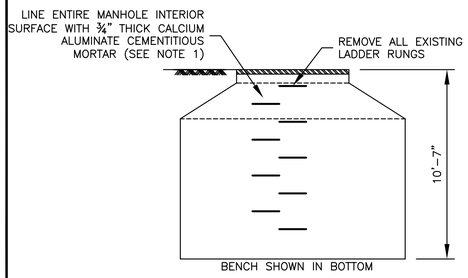

UNROLLED WALL SECTION

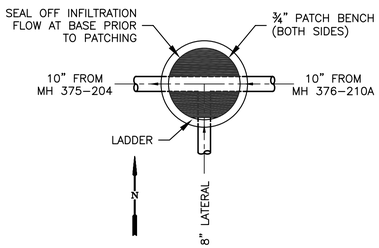

BOTTOM PLAN

MANHOLE 376-210

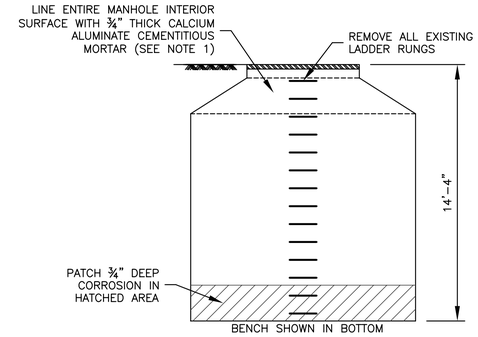

UNROLLED WALL SECTION

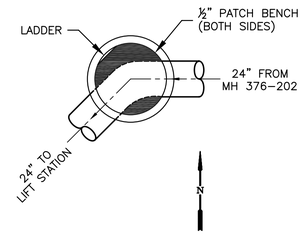

BOTTOM PLAN

MANHOLE 376-201

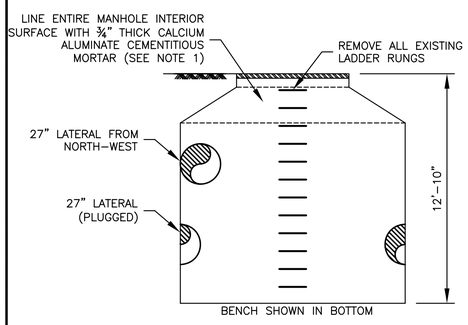

UNROLLED WALL SECTION

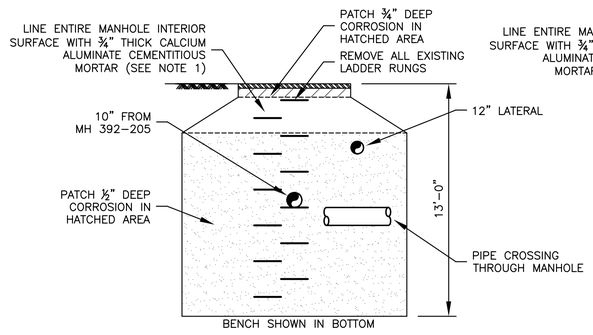

UNROLLED WALL SECTION

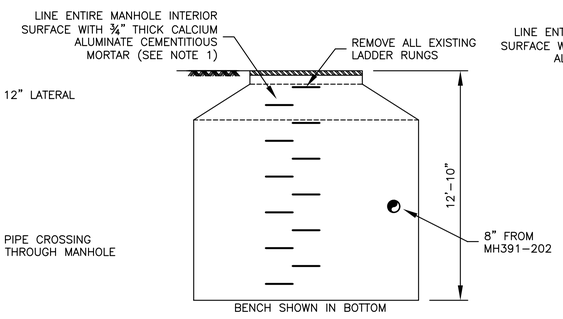

UNROLLED WALL SECTION

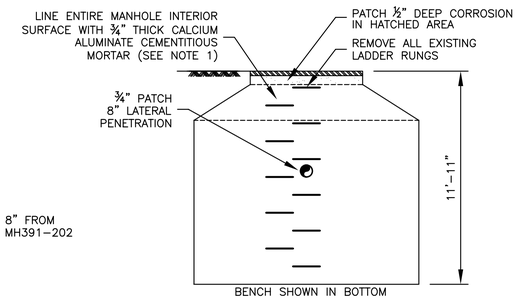

UNROLLED WALL SECTION

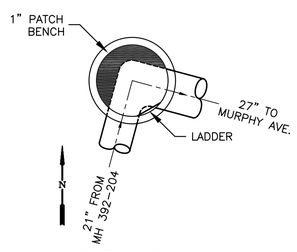

BOTTOM PLAN

MANHOLE 392-201

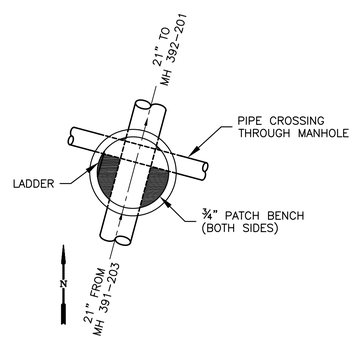

BOTTOM PLAN

MANHOLE 392-204

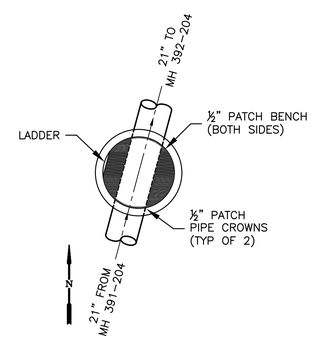

BOTTOM PLAN

MANHOLE 391-203

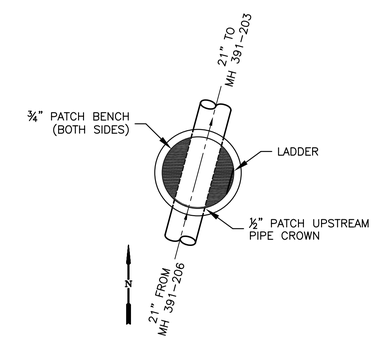

BOTTOM PLAN

MANHOLE 391-204

NOTES:

1. LINE ENTIRE MANHOLE INTERIOR SURFACE WITH ¾" THICK CALCIUM ALUMINATE CEMENTITIOUS MORTAR LINING. MATERIAL SHALL BE PLACED IN ADDITION TO SPECIFIED THICKNESS OF PATCHING MATERIAL. TOTAL APPLIED THICKNESS OF MATERIAL APPLIED TO MANHOLE SHALL BE THE REQUIRED THICKNESS OF THE PATCHING MATERIAL PLUS THE ¾" THICK LINING MATERIAL THICKNESS.

2. LADDER RUNGS SHALL BE REMOVED TO FLUSH WITH MANHOLE WALL SURFACE. ANY HOLES OR VOIDS CREATED SHALL BE PATCHED FLUSH WITH MANHOLE WALL.

Rev.	Description	Date
G	RECORD DRAWINGS	3/5/07

LEE&RO, Inc.
Walnut Creek, California

Scale	1/4"=1'-0"
Designed By:	TJB
Drawn By:	JMP
Checked By:	BOG
Consultant's Job No.	610-01

REHABILITATION OF MANHOLES
LAWRENCE TRUNK SEWER

MANHOLE PLAN AND SECTIONS – (12)

CITY OF SUNNYVALE CALIFORNIA

City of Sunnyvale
Santa Clara County
California

Department of Public Works
456 West Olive Avenue
P.O. Box 3707
Sunnyvale 94088-3707

City of Sunnyvale Project No.
UY-02/05-03

Drawing No.
C-19

Sheet 21 of 25

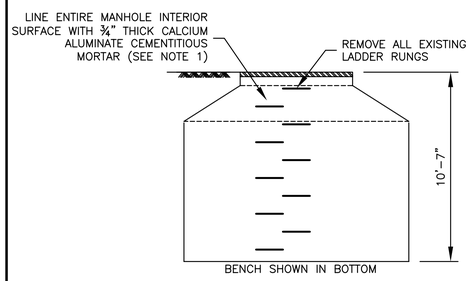

UNROLLED WALL SECTION

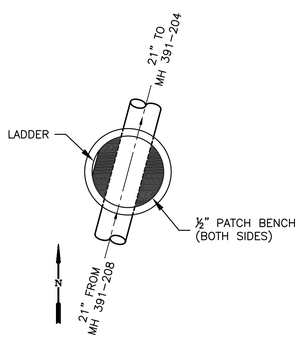

BOTTOM PLAN

MANHOLE 391-206

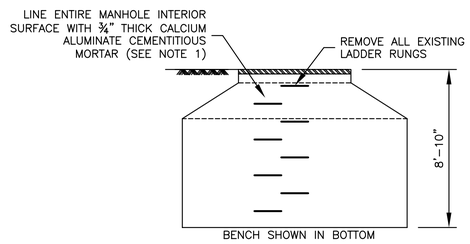

UNROLLED WALL SECTION

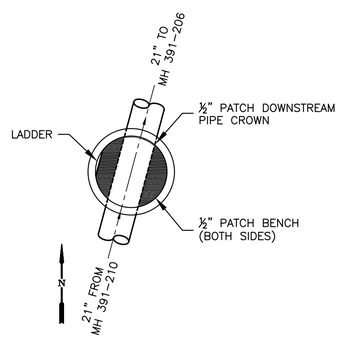

BOTTOM PLAN

MANHOLE 391-208

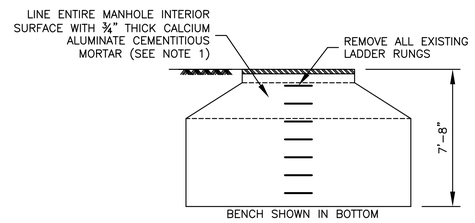

UNROLLED WALL SECTION

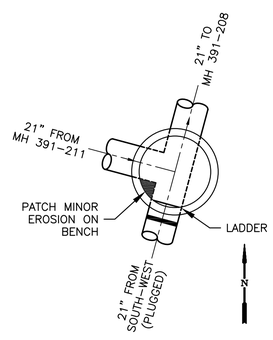

BOTTOM PLAN

MANHOLE 391-210

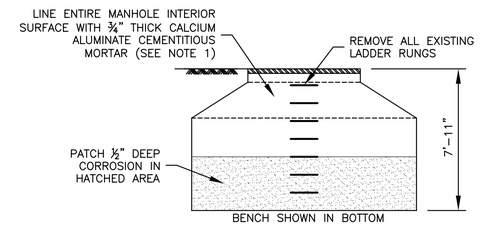

UNROLLED WALL SECTION

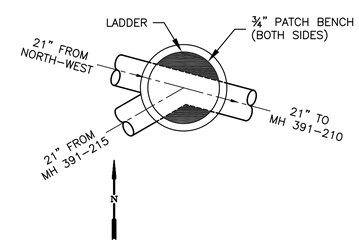

BOTTOM PLAN

MANHOLE 391-211

NOTES:

1. LINE ENTIRE MANHOLE INTERIOR SURFACE WITH ¾" THICK CALCIUM ALUMINATE CEMENTITIOUS MORTAR LINING. MATERIAL SHALL BE PLACED IN ADDITION TO SPECIFIED THICKNESS OF PATCHING MATERIAL. TOTAL APPLIED THICKNESS OF MATERIAL APPLIED TO MANHOLE SHALL BE THE REQUIRED THICKNESS OF THE PATCHING MATERIAL PLUS THE ¾" THICK LINING MATERIAL THICKNESS.

2. LADDER RUNGS SHALL BE REMOVED TO FLUSH WITH MANHOLE WALL SURFACE. ANY HOLES OR VOIDS CREATED SHALL BE PATCHED FLUSH WITH MANHOLE WALL.

Rev.	Description	Date
G	RECORD DRAWINGS	3/5/07

LEE&RO, Inc.
Walnut Creek, California

Scale	1/4"=1'-0"
Designed By:	TJB
Drawn By:	JMP
Checked By:	BOG
Consultant's Job No.	610-01

REHABILITATION OF MANHOLES
LAWRENCE TRUNK SEWER

MANHOLE PLAN AND SECTIONS – (13)

CITY OF SUNNYVALE CALIFORNIA

City of Sunnyvale
Santa Clara County
California

Department of Public Works
456 West Olive Avenue
P.O. Box 3707
Sunnyvale 94088-3707

City of Sunnyvale Project No.
UY-02/05-03

Drawing No.
C-20

Sheet 22 of 25

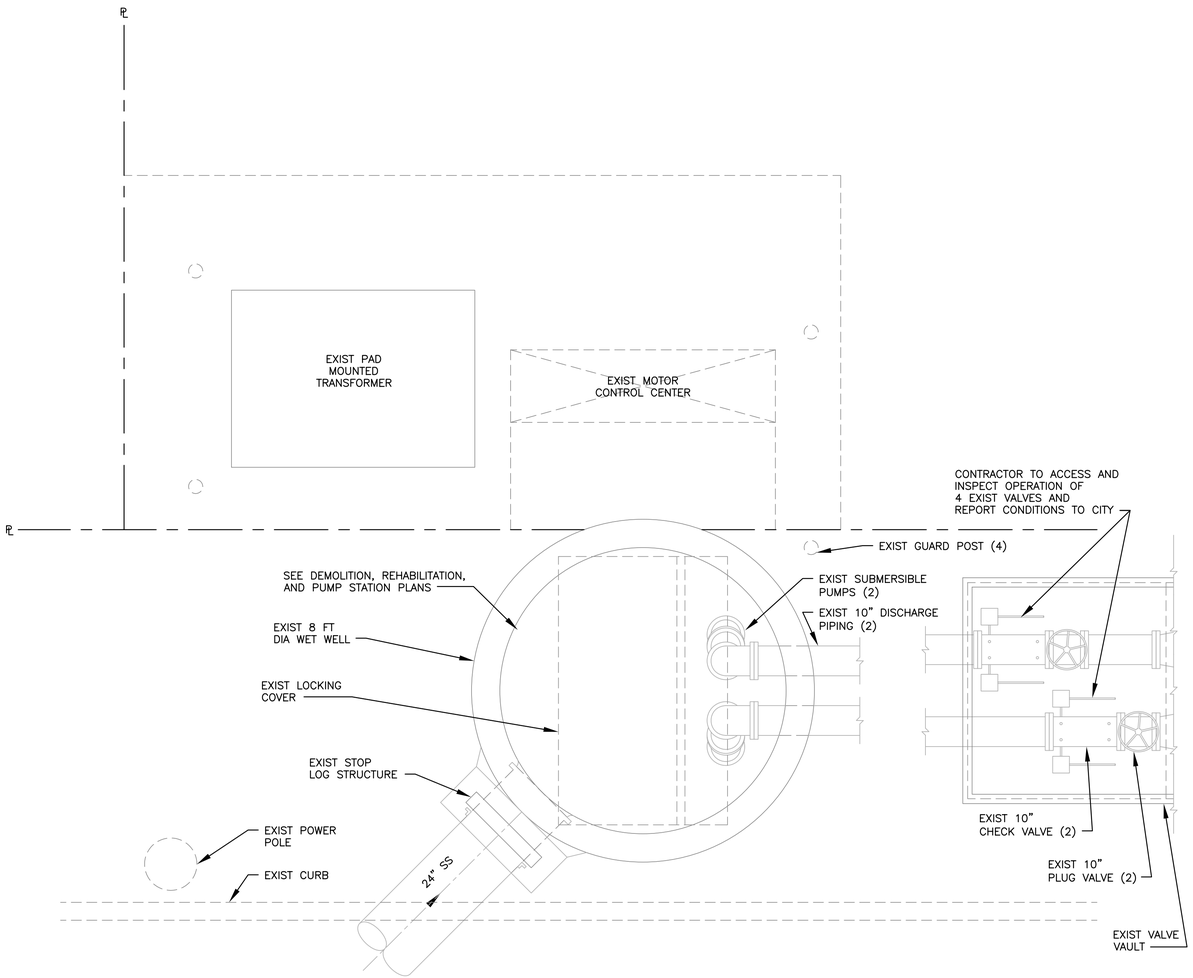

PUMP STATION EXISTING SITE PLAN

SCALE: ½" = 1'

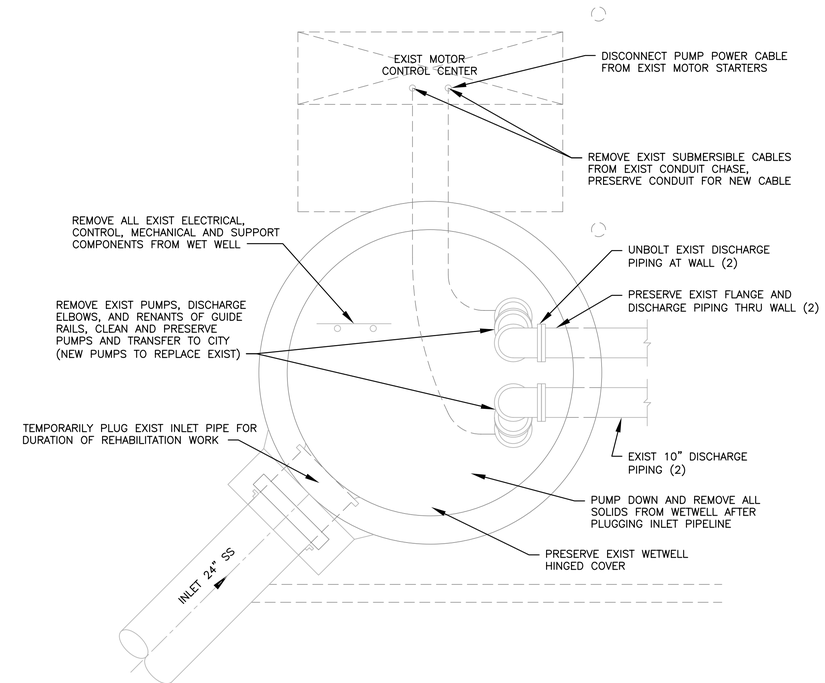

PUMP STATION DEMOLITION PLAN

SCALE: ½" = 1'

Rev.	Description	Date
G	RECORD DRAWINGS	3/5/07

LEE&RO, Inc.
Walnut Creek, California

Scale	1/2"=1'-0"
Designed By:	TJB
Drawn By:	MWR
Checked By:	TJB
Consultant's Job No.	610-01

REHABILITATION OF MANHOLES
LAWRENCE TRUNK SEWER

PUMP STATION EXIST PLAN AND DEMOLITION

CITY OF SUNNYVALE CALIFORNIA

City of Sunnyvale
Santa Clara County
California

Department of Public Works
456 West Olive Avenue
P.O. Box 3707
Sunnyvale 94088-3707

City of Sunnyvale Project No.
UY-02/05-03

Drawing No.
M-1

Sheet 23 of 25

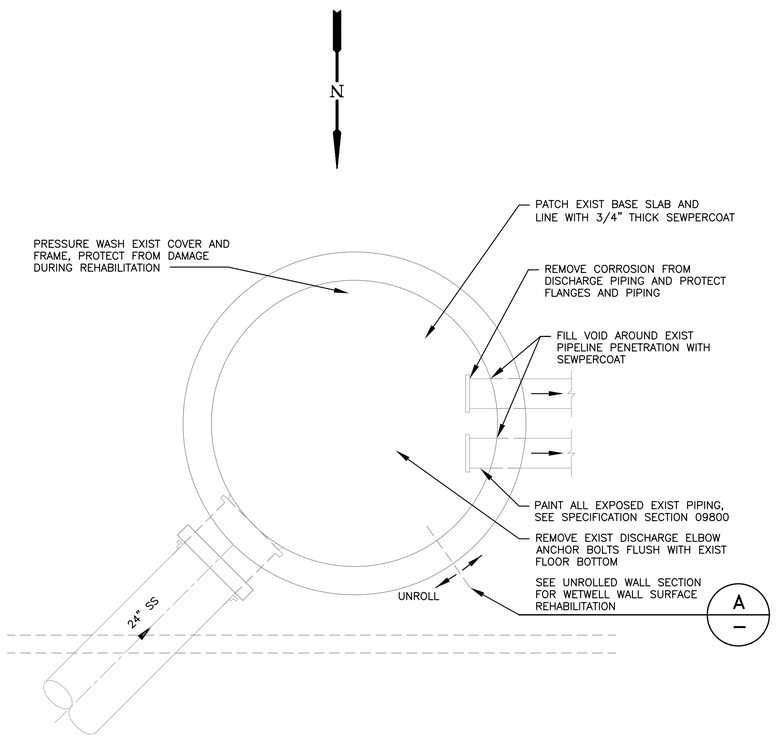

WETWELL STRUCTURE REHABILITATION PLAN

SCALE: ½" = 1'

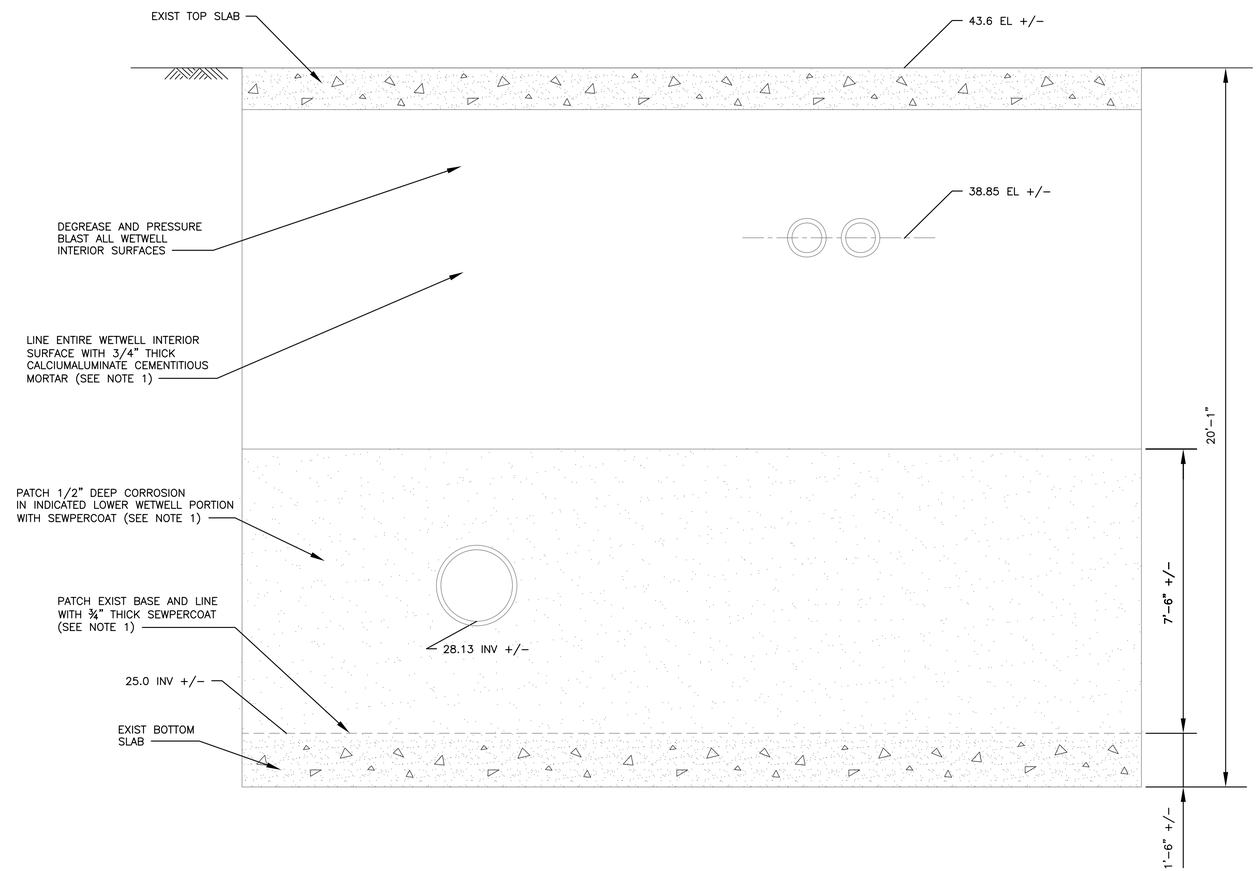

UNROLLED WETWELL STRUCTURE WALL SECTION (A / —)

SCALE: ½" = 1'

NOTES:

1. LINE ENTIRE MANHOLE INTERIOR SURFACE AND BOTTOM WITH 3/4" THICK CALCIUM ALUMINATE CEMENTITIOUS MORTAR LINING. MATERIAL SHALL BE PLACED IN ADDITION TO SPECIFIED THICKNESS OF PATCHING MATERIAL. TOTAL APPLIED THICKNESS OF MATERIAL APPLIED TO MANHOLE SHALL BE THE REQUIRED THICKNESS OF THE PATCHING MATERIAL PLUS THE 3/4" THICK LINING MATERIAL THICKNESS.

Rev.	Description	Date
G	RECORD DRAWINGS	3/5/07

LEE&RO, Inc.
Walnut Creek, California

Scale	1/2"=1'-0"
Designed By:	TJB
Drawn By:	MWR
Checked By:	TJB
Consultant's Job No.	610-01

REHABILITATION OF MANHOLES
LAWRENCE TRUNK SEWER

PUMP STATION REHAB PLAN AND SECTION

CITY OF SUNNYVALE CALIFORNIA

City of Sunnyvale
Santa Clara County
California

Department of Public Works
456 West Olive Avenue
P.O. Box 3707
Sunnyvale 94088-3707

City of Sunnyvale Project No.
UY-02/05-03

Drawing No.
M-2

Sheet 24 of 25

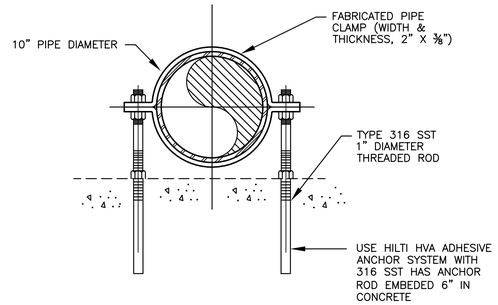

DETAIL 1/–
SCALE: N T S

NOTES:

1. TIMING OF LEVEL SENSOR AND GAS DETECTOR INSTALLATION IS UNKNOWN. CONTRACTOR SHALL PRESERVE AND PROTECT ITEMS INSTALLED BY OTHERS.
2. REPLACE ALL EXISTING BOLTS WITH 316 STAINLESS STEEL BOLTS.
3. GUIDE BRACKETS, LIFTING CABLE, CABLE HOLDER, AND SAFETY HOOKS SHALL BE AS MANUFACTURED OR FURNISHED BY ITT FLYGT. SEE SPECIFICATION SECTION 11100.

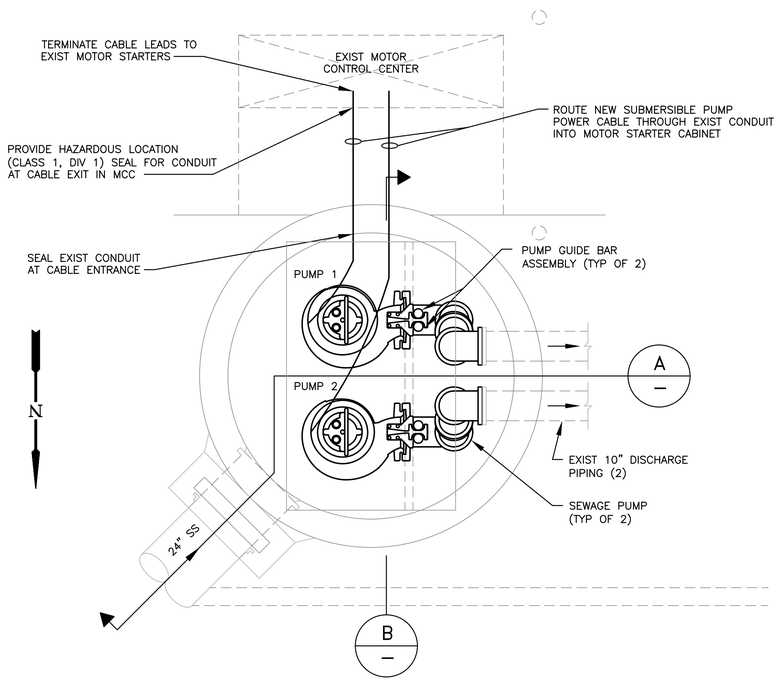

PUMP STATION PLAN
SCALE: ½" = 1'

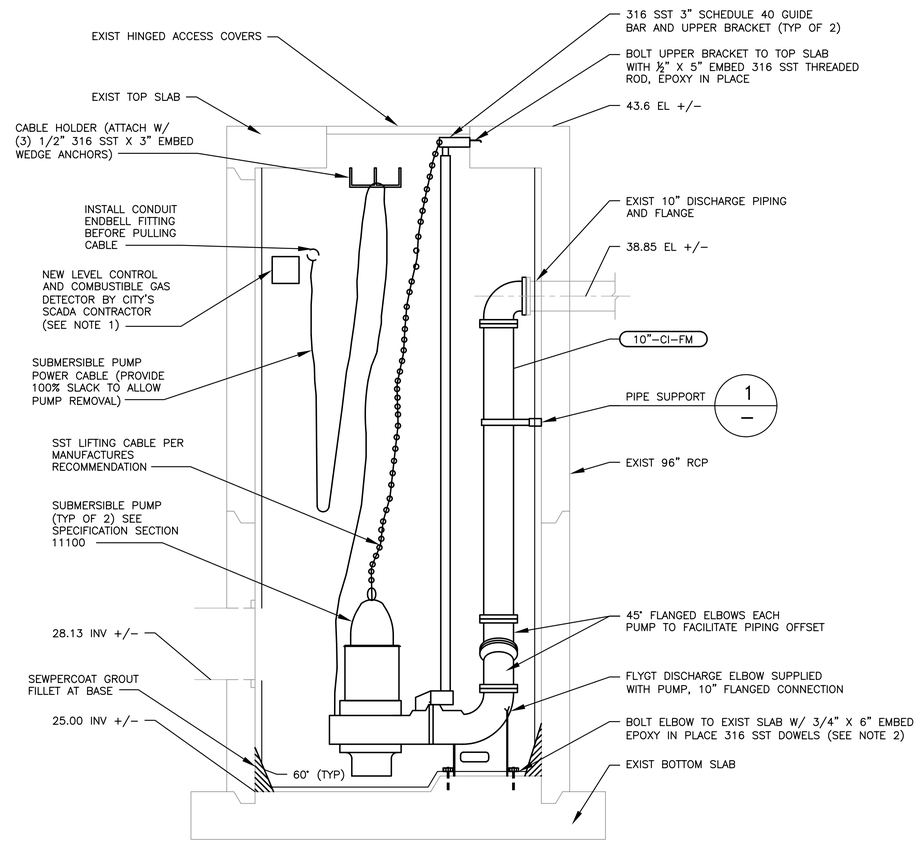

PUMP STATION SECTION A/–
SCALE: ½" = 1'

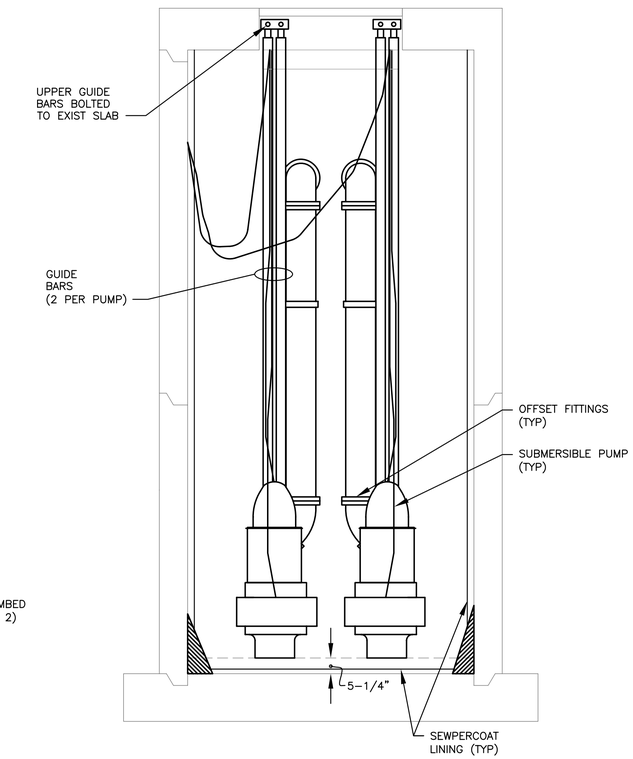

PUMP STATION SECTION B/–
SCALE: ½" = 1'

PUMP SCHEDULE				
PUMP NO	SERVICE	RATING	MOTOR	MODEL NO
1 & 2	SEWAGE	1650 GPM @ 50 FT TDH	460 V, 3 DIA, 60 HZ, 35 HP	FLYGT NP

Rev.	Description	Date
G	RECORD DRAWINGS	3/5/07

LEE&RO, Inc.
Walnut Creek, California

Scale	1/2"=1'–0"
Designed By:	TJB
Drawn By:	MWR
Checked By:	TJB
Consultant's Job No.	610–01

REHABILITATION OF MANHOLES
LAWRENCE TRUNK SEWER

PUMP STATION PLAN AND SECTION

CITY OF SUNNYVALE CALIFORNIA

City of Sunnyvale
Santa Clara County
California

Department of Public Works
456 West Olive Avenue
P.O. Box 3707
Sunnyvale 94088–3707

City of Sunnyvale
Project No.
UY–02/05–03

Drawing No.
M–3

Sheet 25 of 25