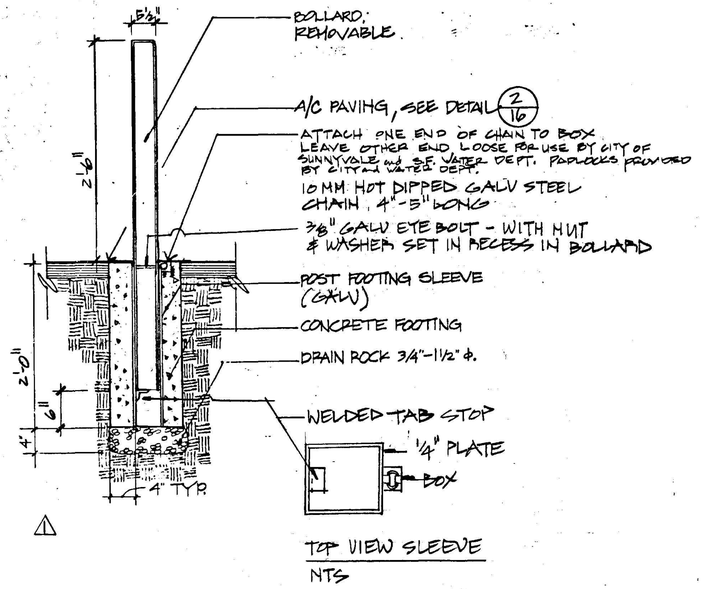

1/18 REMOVABLE BOLLARD

SCALE: 1"=1'-0"

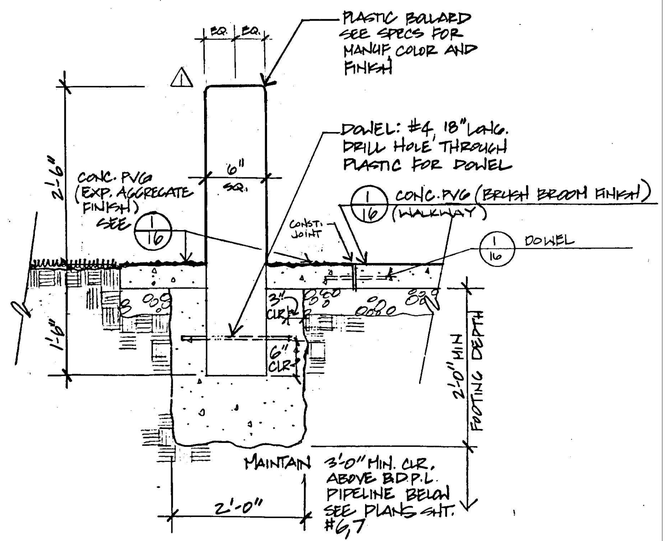

2/18 FIXED BOLLARD & CONCRETE PAVING

SCALE: 1"=1'-0"

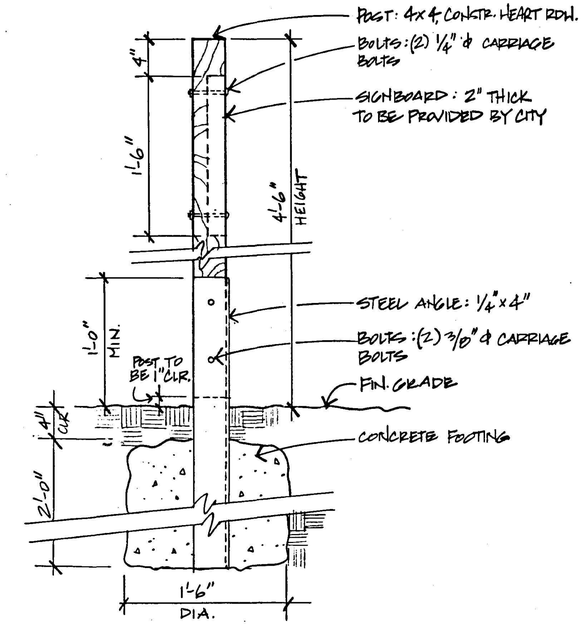

3/18 ENTRY SIGN (BID ALTERNATE 'A')

SCALE: 1½"=1'-0"

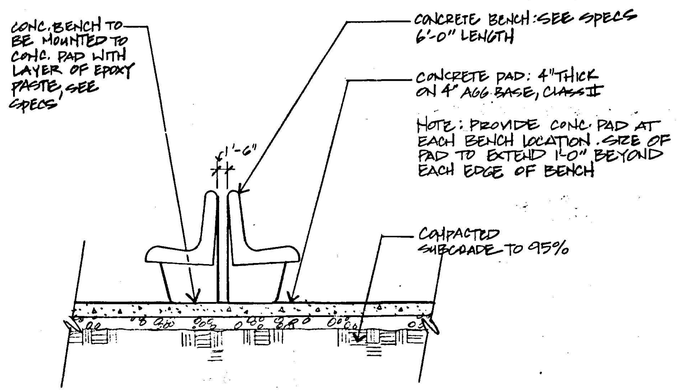

4/18 CONCRETE BENCH

N.T.S.

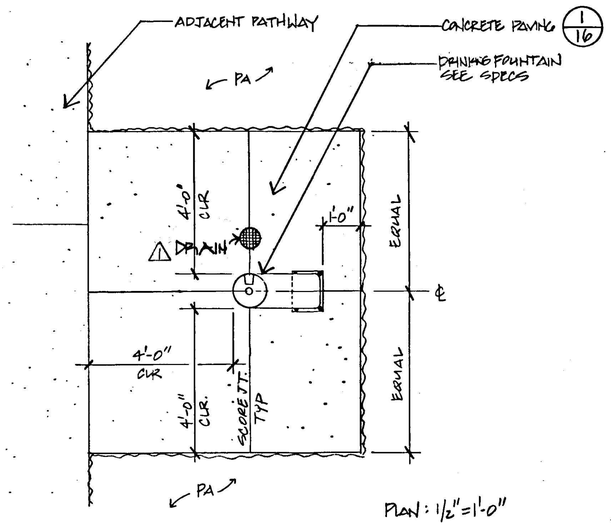

PLAN: 1½"=1'-0"

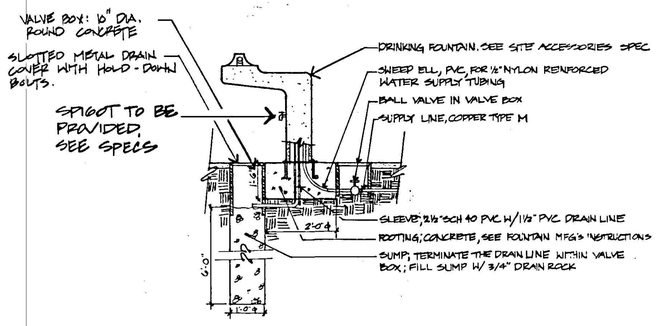

SECTION: NTS

5/18 DRINKING FOUNTAIN

SCALE: AS SHOWN

AS-BUILT
RECEIVED

DATE
18 OF 23 SHEETS

RECORD DRAWINGS

PR-93-5

Callander Associates
Landscape Architecture
Park and Recreation Design
Waterfront Planning
Land Planning

311 Seventh Avenue
San Mateo, CA 94401
(415) 375-1313
Fax (415) 344-3290
Ca. Lic. #1308

299 Cannery Row
Monterey, CA 93940
(408) 646-1383
Fax (408) 373-8653
Ca. Lic. #3099

Revisions
1 RECORD DRAWINGS 1-15-96

REGISTERED LANDSCAPE ARCHITECT WILLIS CALLANDER No. 1308 Expires 3/31/97 STATE OF CALIFORNIA

CONSTRUCTION DETAILS
FAIRWOOD SCHOOL AND PARK
1110 FAIRWOOD AVENUE SUNNYVALE, CALIFORNIA

Date	4-13-94
Scale	AS SHOWN
Drawn	AB / JJ
Checked	BH
Project No.	91.067
Sheet No.	18 of 23

PR-005.183