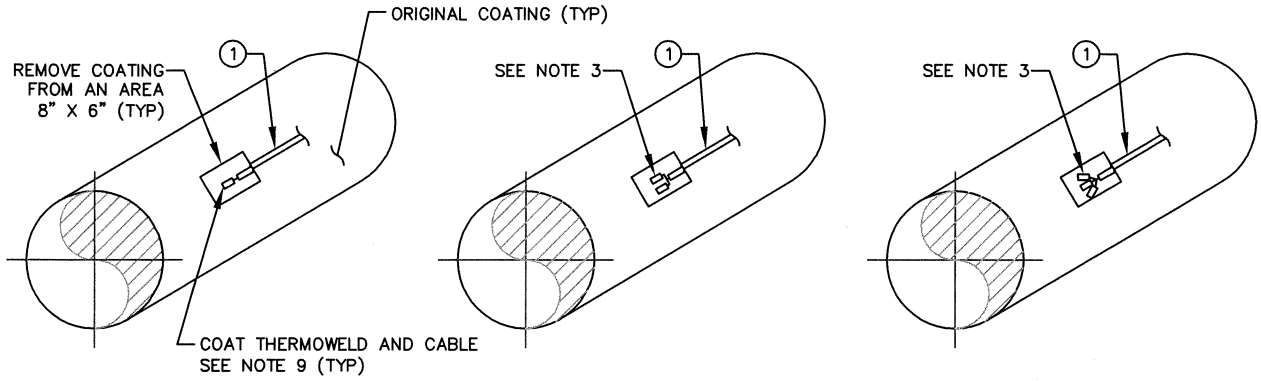

DETAIL 1

CONNECTIONS OF #6 AWG CABLE AND SMALLER (TYP)

DETAIL 2

CONNECTIONS OF #4 AWG CABLE (TYP)

DETAIL 3

CONNECTIONS OF #2 AWG CABLE AND LARGER (TYP)

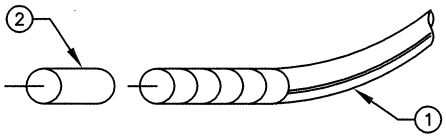

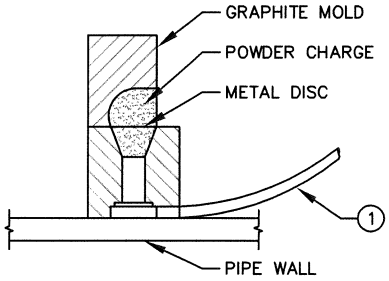

EXOTHERMIC CONNECTION DETAIL

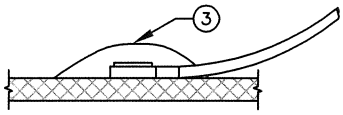

EXOTHERMIC CONNECTION SECTION

NOTES:

1. CLEAN AREA OF STEEL SURFACE APPROXIMATELY 2"X2" FOR EACH THERMOWELD CONNECTION. WIRE BRUSH FILE AND SCRAPE TO OBTAIN SSPC-SP-5 WHITE METAL SURFACE FINISH.
2. SELECT PROPER MOLD BASED ON STRUCTURE GEOMETRY, ORIENTATION, AND MATERIAL TYPE.
3. STRIP CABLE END AND TWIST TO FIT THERMOWELD MOLD. CABLE SIZES LARGER THAN #6 AWG SHALL BE THERMOWELDED BY TWISTING CONDUCTORS INTO GROUPS APPROXIMATELY #6 AWG CABLE SIZE. MINIMUM SPACING BETWEEN WELDS SHALL BE DETERMINED BY MOLD GEOMETRY, NOMINALLY 3".
4. HOLD MOLD FIRMLY AGAINST PIPE WITH OPENING AWAY FROM THE OPERATOR. IGNITE WITH WELDING FLINT LIGHTER.
5. REMOVE ALL WELD SLAG, SPLATTER, SHARP EDGES, AND BURBS WITH CHIP HAMMER AND METAL FILE.
6. TEST STRENGTH OF CONNECTION BY LIGHTLY TAPPING WITH 1 LB HAMMER, AND PULL WITH 5 LB FORCE ON CABLE.
7. WIPE PIPE SURFACE WITH CLEAN, OIL FREE RAGS TO REMOVE ANY LOOSE DUST.
8. PRIME CLEANED SURFACE WITH APPROVED PRIMER.
9. COAT THERMOWELD AND 6" OF CABLE TAIL WITH COMPATIBLE COATING, SUCH THAT ALL CORNERS ARE FILLED. THE COATING SHALL EXTEND FOR AT LEAST 2" AROUND THE THERMOWELD.
10. THERMOWELD CARTRIDGE SIZE SHALL BE COMPATIBLE TO STEEL MATERIALS. MULTIPLE POWER CARTRIDGE CHARGERS SHALL NOT BE USED. IF A THERMOWELD MUST BE REPEATED, A NEW PIPE SURFACE MUST BE PREPARED AT LEAST 3" FROM THE ORIGINAL WELD ATTEMPT. MORE THAN ONE WELD ATTEMPT ON THE SAME SPOT SHALL NOT BE PERMITTED.
11. IN NON-CONCRETE LINED PIPES, ALL EXOTHERMIC WELDS SHALL BE MADE IN A STEEL PAD.

CABLE SIZE	NO. OF STRANDS	NO. OF EXOTHERMIC GROUPS PER CABLE CONNECTION	CABLE STRANDS PER GROUP
8	19	1	19
6	7	1	7
	19		19
4	7	2	3-4
	19		10-9
2	7	3	3-2-2
	19		7-6-6

ITEMS CALL OUT:

1. CABLE: AWG SIZE, ASTM B388 ASTM D-1248, TYPE 1, CLASS C, GR5 INSULATION
2. SLEEVE: ADAPTER
3. APPROVED PRIMER AND WELD CAP OR MORTAR OVER WELD LOCATION

EXOTHERMIC WELDING DETAIL - 2

APPROVED BY:

DATE : DEC 2014

REVISED : -

DWG. 26B - 2