SMaRT STATION

CITY OF SUNNYVALE
SUNNYVALE CALIFORNIA

PR-92-15

DRAWING LIST

GENERAL
001 COVER SHEET & DRAWING LIST
002 SITE GENERAL ARRANGEMENT
003 BUILDING GENERAL ARRANGEMENT
004 TYPICAL CROSS–SECTIONS
005 DESIGN CRITERIA
006 DESIGN SCHEDULE
007 STRUCTURAL STANDARDS – SH 1
008 STRUCTURAL STANDARDS – SH 2
009
010 MRF EQUIPMENT

SITE PREPARATION
101 GRADING & PAVING – FINISH ELEVATIONS
102 GRADING & PAVING– SECTS – SH 1
103 GRADING & PAVING– ROUGH GRADING
104 GRADING & PAVING– SECTS – SH 2
105 GRADING & PAVING DETAILS
106 PAVEMENT – STRIPING PLAN
107 SCALE HOUSE – PLAN & DETAILS
108 TRUCK SCALES – PLAN & DETAILS
109 HHW STORAGE AREA
110 FENCING

UTILITIES
115 ACCESS ROAD UTILITIES
116 SITE UTILITIES – S.W. QUADRANT
117 SITE UTILITIES – N.W. QUADRANT
118 SITE UTILITIES – N.E. QUADRANT
119 SITE UTILITIES – S.E. QUADRANT
120 SITE UTILITIES DETAILS
121
122
123
124
125 METHANE PROTECTION SYSTEM

STRUCTURAL
201 PILE CAP & GRADE BEAM PLAN
202 FOUNDATIONS– SECTIONS & DETAILS– SHEET 1
203 FOUNDATIONS– SECTIONS & DETAILS– SHEET 2
204 FOUNDATIONS– SECTIONS & DETAILS– SHEET 3
205 FOUNDATIONS– PILE PLAN & DETAILS
206 FOUNDATIONS– CURBSIDE UNLOADING PIT
207
208
209
210 GROUND FLOOR – CONCRETE OUTLINE
211 GROUND FLOOR – PITS & TRENCH
212 GROUND FLOOR – WALL DETAILS
213 GROUND FLOOR – MISCELLANEOUS DETAILS
214
215 MCC,WASHROOM & SERVICE ROOMS
216 VEHICLE MAINTENANCE BUILDING
217
218
219 MAIN BLDG. FRAME – SECTS & DETAILS SH 1
220 MAIN BLDG. FRAME – ELEVATIONS – SHEET 1
221 MAIN BLDG. FRAME – ELEVATIONS – SHEET 2
222 MAIN BLDG. – WALL DETAILS SH 1
223 MAIN BLDG. – WALL DETAILS SH 2
224 MAIN BLDG. – WALL DETAILS SH 3
225 OFFICE BLDG. – PLANS
226 OFFICE BLDG. – SECTS. & DETAILS SH 1
227 OFFICE BLDG. – SECTS. & DETAILS SH 2

ARCHITECTURAL
301 MAIN BLDG. – EXTERIOR ELEVATIONS
302 MAIN BLDG. – WALL SECTIONS
303
304 MAIN BLDG. – DOOR SCHEDULE
305
306 OFFICE BUILDING

LANDSCAPING
315 SIGNAGE

ELECTRICAL
400 ELECTRICAL ABBREVIATIONS AND SYMBOLS
401 ONE–LINE DIAGRAM
402 INCOMING ELEC., GAS & PHONE UTILITY U/G LAYOUT
403 SUBSTATION, ELECTRIC ROOM LAYOUT & DETAILS
404 ELECTRICAL GROUNDING LAYOUT
405 ELECTRICAL GROUNDING DETAILS
406 MOTOR CONTROL CENTER LAYOUT
410 ROADWAYS AND PARKING LIGHTING
415 UNDERGROUND CONDUIT LAYOUTS
420 MAIN BLDG. – LIGHTING LAYOUT
421 MAIN BLDG. PANEL LOC. & PWR. LAYOUT
422 VEH. MAINT./MCC & SHOP – ELEC. LAYOUT
423 LIGHTING SCHEDULE, PLANS & DETAILS
424 PANEL SCHEDULE SH 1
425 PANEL SCHEDULE SH 2
430 OFFICE – LIGHTING & POWER SH 1
431 OFFICE – LIGHTING & POWER SH 2
432 OFFICE – REFLECTED CEILING PLAN
440 ELEMENTARY DIAGRAMS SH. 1
441 ELEMENTARY DIAGRAMS SH. 2
442 ELEMENTARY DIAGRAMS SH. 3
443 ELEMENTARY DIAGRAMS SH. 4
444 ELEMENTARY DIAGRAMS SH. 5
445 ELEMENTARY DIAGRAMS SH. 6
} MRF AREA

MECHANICAL (PROCESSING BLDG.)
501 NOTES, LEGEND, SYMBOLS & SCHEDULES
502 NOTES, LEGEND, SYMBOLS & SCHEDULES
503 MAIN TRANSFER BUILDING – HVAC
504 MAIN TRANSFER BUILDING – PLUMBING
505 MAIN TRANSFER BUILDING – ROOF PLAN
506 ENLARGED FLOOR PLANS – SH 1
507 ENLARGED FLOOR PLANS – SH 2
508
509
510 DETAILS – SH.1
511 DETAILS – SH.2
512 CONTROL & WIRING DIAGRAM
513
514
515
516
517
518 WASTE OIL TANK DETAILS
519 DIESEL TANK DETAILS

MECHANICAL (OFFICE)
520 NOTES, LEGEND, SYMBOLS & SCHEDULES
521 NOTES, LEGEND, SYMBOLS & SCHEDULES
522 FLOOR / ROOF PLAN – HVAC
523 FLOOR / ROOF PLAN – PLUMBING
524 ENLARGED FLOOR PLANS
525 DETAILS – SH.1
526 DETAILS – SH.2
527 CONTROL & WIRING DIAGRAM
528 TITLE 24 COMPLIANCE FORMS

1/74
PR-92-15

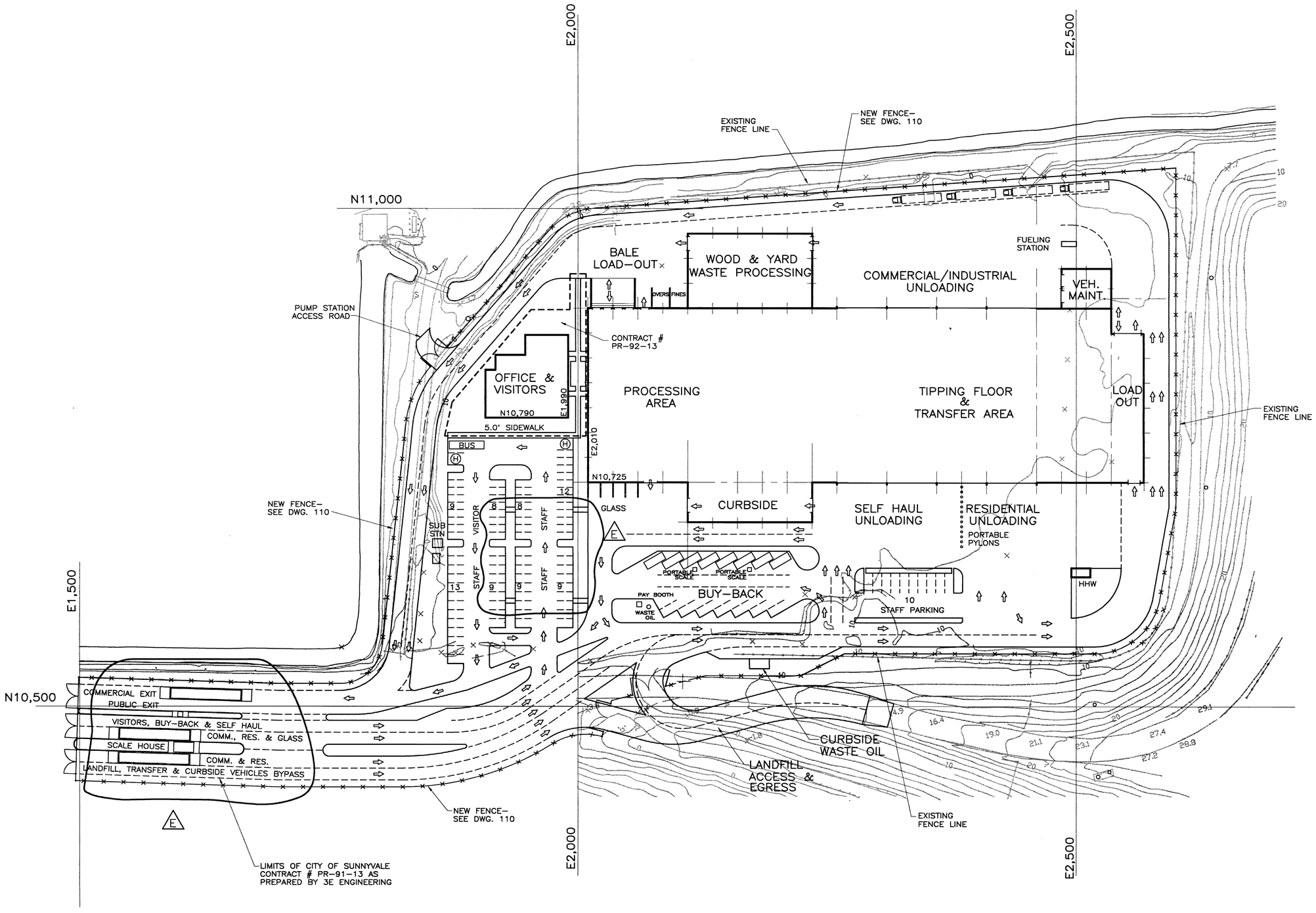

TRAILER STAGING AREA IN SAME LOCATION AS THE CONTRACTOR'S STAGING AREA

NOTES

1. TOPOGRAPHY SHOWN ON THIS DRAWING IS FOR REFERENCE ONLY. FOR COMPLETE INFORMATION SEE DWGS. 2901901 THRU 2901906 AS PREPARED BY SANDIS AND ASSOCIATES OF MOUNTAIN VIEW, CALIFORNIA.

No.	DATE	BY	REVISION
E	10/5	RWC	ISSUED FOR ADDENDA #1
D	9/21	RWC	CLIENT REVIEW–PR–92–13
D	9/14	RWC	LANDFILL ACCESS/EGRESS & PARKING AREAS REVISED
C	9/4	RWC	BID PURPOSES
C	8/21	RWC	PARKING ENTRANCE REV,D /OWNER REVIEW
B	7/17,21	RWC	COMPACTOR ADDITION /OWNER REVIEW
A	6/12	VCH	REVISED PARKING, BUYBACK & WOODWASTE AREAS

JOB No. 78783	DESIGNED:	PROJECT ENGINEER: RWC	
SCALE: 1"=50'	DRAWN BY: VCH	APPROVED BY:	
	CHECKED BY:	DATE:	

URS CONSULTANTS

WESTERN REGION
500 N.E. MULTNOMAH
PORTLAND OREGON
97232

CITY OF SUNNYVALE CALIFORNIA

SMaRT STATION
SITE
GENERAL ARRANGEMENT

SHEET 2 / 74

DRAWING NUMBER: 002

ISSUE E

E1,350
N10,150

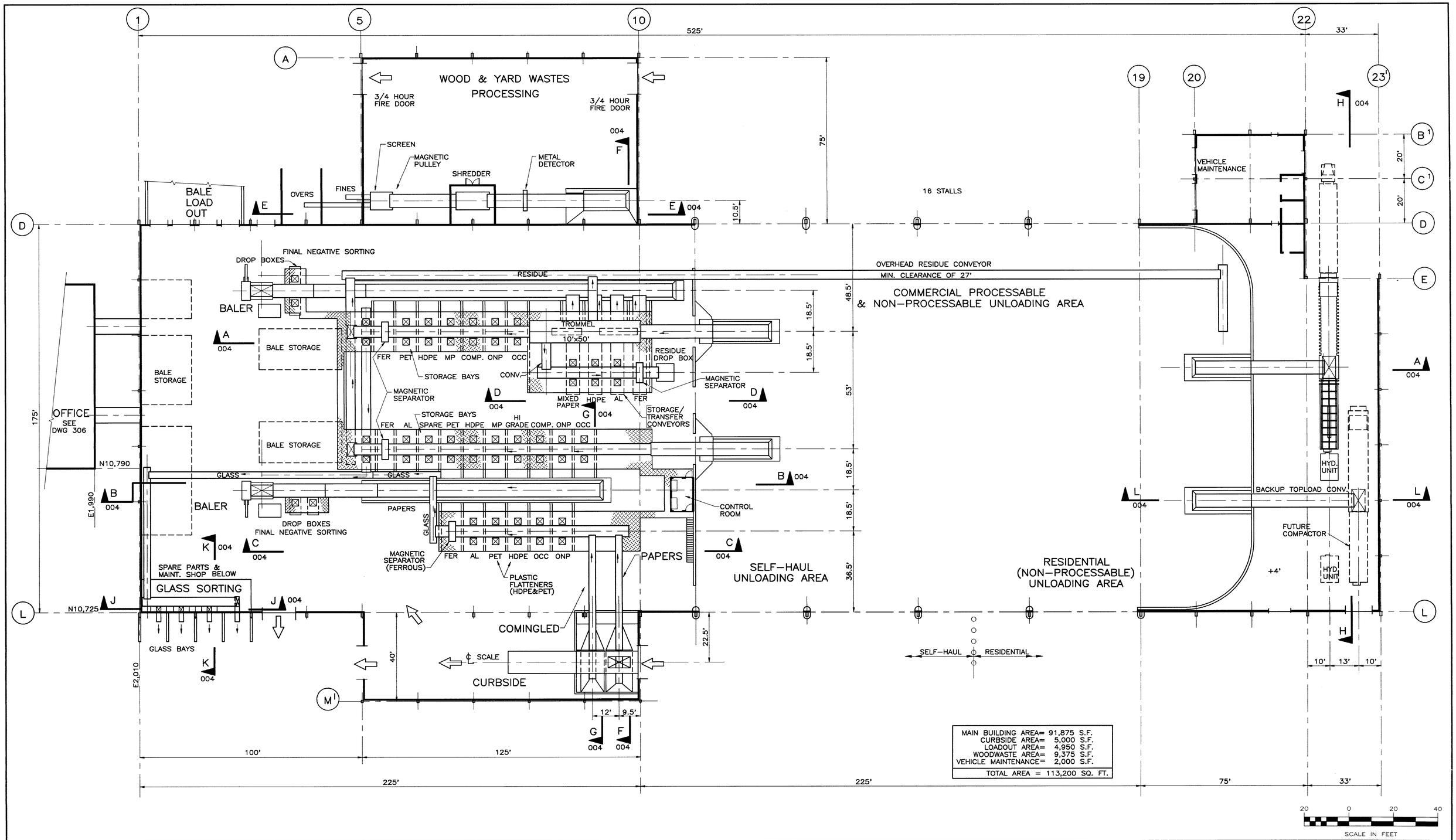

No.	DATE	BY	REVISION
D	9/4	RWC	BID PURPOSES
C	8/21	RWC	LAYOUT REVISED /OWNER REVIEW
B	7/17,/21	RWC	COMPACTOR ADDITION /OWNER REVIEW
A	6/23	RWC	FOR PERMIT PURPOSES

JOB No. 78783	DESIGNED:	PROJECT ENGINEER: RWC
SCALE: 1"=20'	DRAWN BY: VCH	APPROVED BY:
	CHECKED BY:	DATE:

URS CONSULTANTS

WESTERN REGION
500 N.E. MULTNOMAH
PORTLAND OREGON
97232

CITY OF SUNNYVALE CALIFORNIA

CITY OF SUNNYVALE
CALIFORNIA
PR-92-15

SMaRT STATION
BUILDING
GENERAL ARRANGEMENT

DRAWING NUMBER: 003

SHEET 3 / 74

ISSUE D

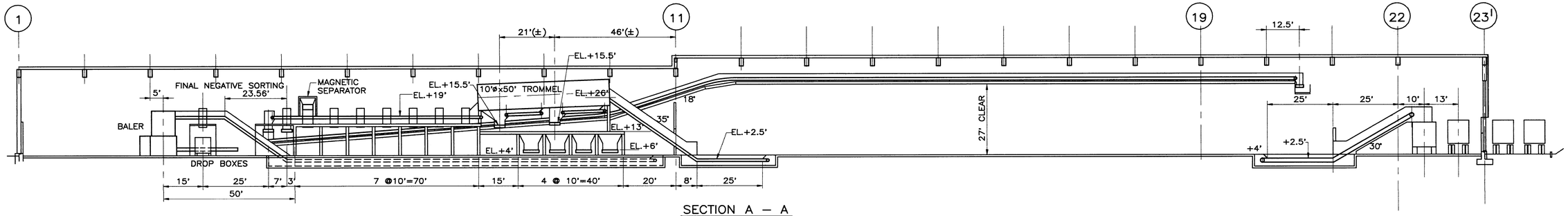

SECTION A – A

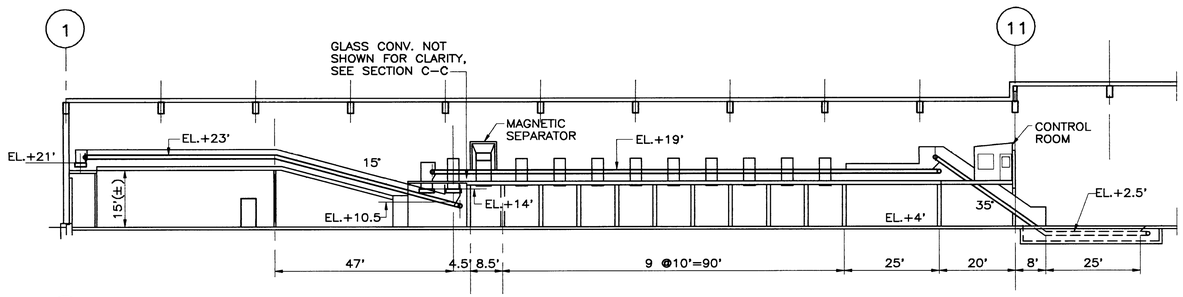

SECTION B – B

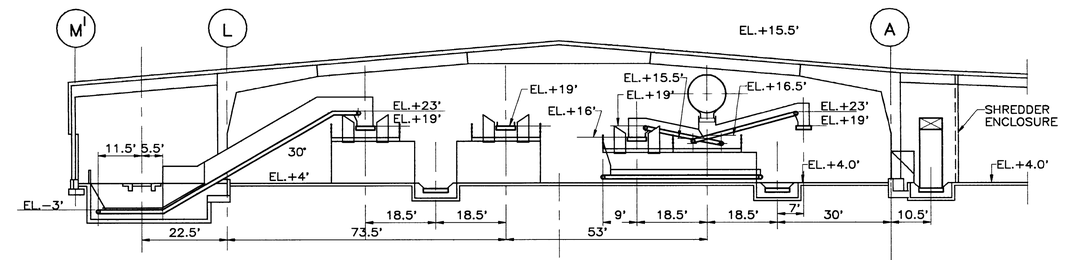

SECTION F – F

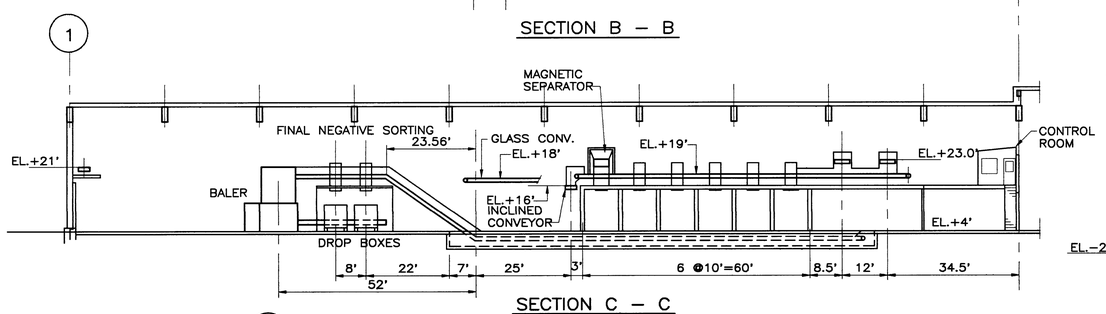

SECTION C – C

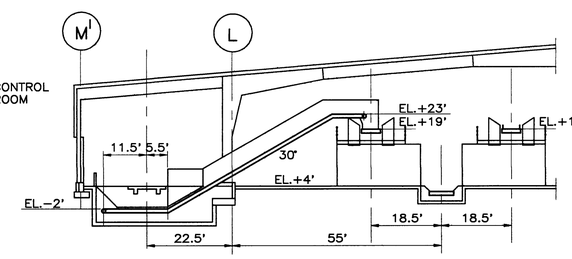

SECTION G – G

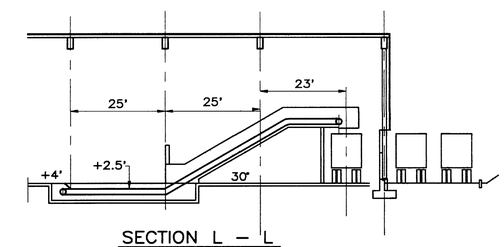

SECTION L – L

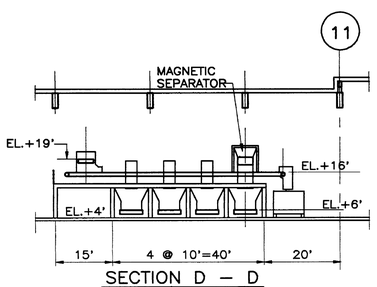

SECTION D – D

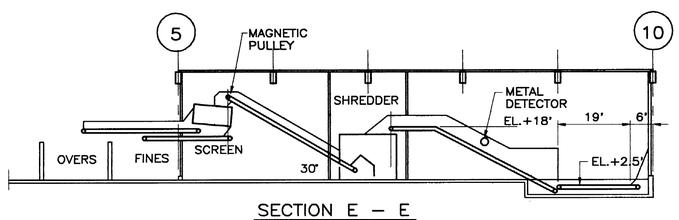

SECTION E – E

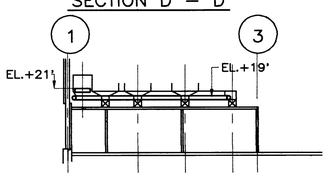

SECTION J – J

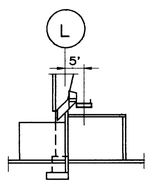

SECTION K – K

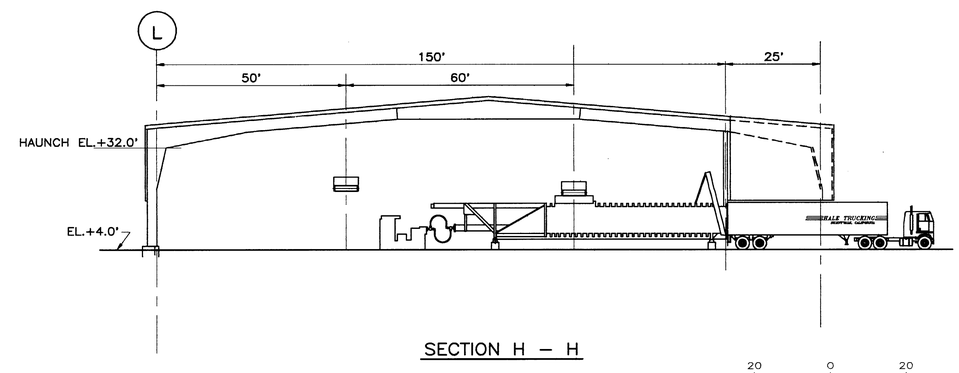

SECTION H – H

20 0 20 40
SCALE IN FEET

No.	DATE	BY	REVISION
E	9/4	RWC	BID PURPOSES
D	8/21	RWC	FOR OPERATIONS RFP
C	7/17,21	RWC	COMPACTOR ADDITION /OWNER REVIEW
B	7/1	RWC	FOR OWNER REVIEW
A	6/23	RWC	FOR PERMIT PURPOSES

JOB No. 78783	DESIGNED:	PROJECT ENGINEER: RWC
SCALE: 1"=20'	DRAWN BY: VCH	APPROVED BY:
	CHECKED BY:	DATE:

URS CONSULTANTS

WESTERN REGION
500 N.E. MULTNOMAH
PORTLAND OREGON
97232

CITY OF SUNNYVALE CALIFORNIA

CITY OF SUNNYVALE
CALIFORNIA
PR-92-15

SMaRT STATION
BUILDING
CROSS SECTIONS

DRAWING NUMBER: 004

SHEET 4/74

ISSUE E

A. ARCHITECTURAL:

1.0 CODES

THE 1991 EDITION OF THE UNIFORM CODE HAS BEEN UTILIZED IN DETERMINING THE FOLLOWING DESIGN REQUIREMENTS:

OCCUPANCY CLASSIFICATION

PROCESSING AND TRANSFER BUILDING	B–2
OFFICE BUILDING	B–2
WOOD & YARD WASTES BUILDING	H–2
VEHICLE MAINTENANCE BUILDING	H–4

TYPE OF CONSTRUCTION

PROCESSING AND TRANSFER BUILDING	TYPE – II N
OFFICE BUILDING	TYPE – II N
WOOD & YARD WASTES BUILDING	TYPE – II FR
VEHICLE MAINTENANCE BUILDING	TYPE – II N

ACCESSIBILTY TO BUILDINGS:

ALL BUILDINGS:	PROVISIONS OF CHAPTER 31
BUILDING EXITS:	PROVISIONS OF CHAPTER 33

FIRE–RESISTIVE STANDARDS:

ALL BUILDINGS: PART VII, PROVISIONS OF CH. 42

WALL AND CEILING COVERINGS:

ALL BUILDINGS AS APPLICABLE: PART IX, CHAPTER 47

2.0 BUILDING MATERIALS AND CONSTRUCTION SYSTEMS

PROJECT WILL BE DESIGNED AS A PERMANENT, FACILITY, AND TYPES OF CONSTRUCTION WERE SELECTED ON THIS BASIS. CONSTRUCTION IS INCOMBUSTIBLE, DESIGNED FOR AN EXPECTED 25–YEAR–PLUS LIFE.

BASIC MATERIALS

PILING – 12 INCH SQ. CONCRETE P/S
FDNS. & SLAB – CONCRETE
SUPERSTRUCTURE – STEEL RIGID FRAME
ROOF DECK – METAL
WALLS – COMBINATION OF CONCRETE, METAL SIDING & GLAZING PANELS

B. CIVIL

1.0 STORM INTENSITY

3.5 INCHES/HR. (PER BLDG. DEPT.)

2.0 STORM DRAINAGE

DISCHARGE TO STORM DRAINAGE CANALS LOCATED WEST AND NORTH OF SITE

3.0 DOMESTIC WATER SUPPLY (CITY MAIN)

UTILIZED FOR SANITARY USE, MIST SYSTEM AND FIRE PROTECTION.

4.0 RECLAIMED WATER SUPPLY (FROM WPCP)

UTILIZED FOR BLDG. CLEANING, IRRIGATION, WATER CLOSETS AND URINALS.

5.0 SANITARY WASTE

COLLECTED ON SITE AND ROUTED TO A NEW 48 INCH SANITARY SEWER LINE TO BE INSTALLED ON BORREGAS AVE.

6.0 PROCESS WASTE

COLLECT ALL PROCESS AND WASH DOWN WATER FROM WITHIN THE STRUCTURE, ROUTE TO A LOCATION WHERE SAMPLING CAN OCCUR AND THEN DISCHARGE INTO THE SANITARY SEWER SYSTEM. TESTS TAKEN AT SIMILAR TRANSFER OPERATIONS INDICATE THAT PRETREATMENT WILL NOT BE NECESSARY HOWEVER DESIGN SHALL BE SUCH THAT FUTURE PRETREATMENT COULD BE ADDED IF SO DETERMINED BY SAMPLING OF SMaRT PROCESS WATERS.

C. STRUCTURAL

1.0 CODES

ALL WORK SHALL CONFORM TO THE MINIMUM STANDARDS OF THE FOLLOWING CODES: THE 1991 EDITION OF THE UNIFORM BUILDING CODE (UBC), AND ANY OTHER REGULATING AGENCIES WHICH HAVE AUTHORITY OVER ANY PORTION OF THE WORK, INCLUDING THE STATE OF CALIFORNIA DIVISION OF INDUSTRIAL SAFETY.

2.0 DESIGN LIVE LOADS

ROOFS:	20 PSF REDUCED
FLOORS (OFFICES):	50 PSF REDUCED U.O.N.
FLOORS (PROCESSING AND TRANSFER BUILDING)	HS–20 HIGHWAY LOADING
STRUCTURAL FLOOR:	300 PSF, 20,000# DOZER LOAD
CORRIDORS AND LOBBIES:	100 PSF

3.0 WIND DESIGN

UBC (OR ANSI A58.1–B2)	BASIC WIND SPEED 70 MPH EXPOSURE CONDITION C.

4.0 SEISMIC DESIGN

UBC: $V = \frac{ZIC}{Rw} W$

$Z = 0.40$	ZONE 4
$I = 1.00$	NORMAL IMPORTANCE FACTOR
$C = \frac{1.25S}{T^{2/3}}$	
$S = S_3 = 1.25$	TABLE NO. 23–J SITE COEFFICIENTS
T =	PERIOD OF VIBRATION
	STEEL FRAMES.
Rw =	TABLE 23–0 – STRUCTURAL SYSTEMS Rw = 8 LONGITUDINAL DIRECTION Rw = 6 TRANSVERSE DIRECTION

5.0 FOUNDATION LOADS

ALL FOUNDATION DESIGNS SHALL BE IN ACCORDANCE WITH THE GEOTECHNICAL INVESTIGATION REPORT BY WAHLER ASSOCIATES DATED MAY, 1990, AND THE ADDENDUM DATED JUNE, 1992.

D. MECHANICAL

1.0 CODES:

UNIFORM MECHANICAL CODE (UMC) 1988

UNIFORM PLUMBING CODE (UPC) 1988

NATIONAL FIRE PROTECTION ASSO. (NFPA) 1989

SUNNYVALE MUNICIPAL CODE

2.0 HEATING, VENTILATION AND AIR CONDITIONING:

a. INDOOR DESIGN CONDITIONS
SUMMER 75°F
WINTER 72°.
(APPLIES TO AIR CONDITIONED AREAS ONLY)

b. OUTDOOR DESIGN CONDITIONS

SUMMER 88°F, db/66°F WB
WINTER: 34°F

c. VENTILATION

OFFICE AREAS	10 CFM/PERSON
PROCESSING & TRANSFER BLDG.	6 AC/HR.
VEHICLE MAINTENANCE BLDG.	6 AC/HR.

3.0 MIST SYSTEM:

COVERAGE: FOR 100% COVERAGE OF MAIN UNLOADING AREA ONLY.
CAPICITY: 10 GPM (PER MFR.)

4.0 FIRE PROTECTION:

SPRINKLER SYSTEM DENSITY: 0.20 GPM OVER MOST REMOTE 3000 SQ.FT.
FIRE HOSE CABINETS: FOR 100% COVERAGE OF BUILDING

C

E. ELECTRICAL

1.0 CODES

ALL WORK SHALL CONFORM TO THE REQUIREMENTS OF THE 1990 NATIONAL ELECTRICAL CODE (NEC) AND THE NATIONAL ELECTRICAL SAFETY CODE (ANSI C2–1987). OTHER REGULATING AGENCIES WHICH HAVE AUTHORITY OVER ANY PORTION OF THE WORK WOULD INCLUDE STATE, COUNTY, CITY OR UTILITY INSPECTORS WHO ARE RESPONSIBLE FOR ELECTRICAL CONSTRUCTION SAFETY.

2.0 UTILITY SERVICES BY PACIFIC GAS AND ELECTRIC CO., 15KV CLASS, 3–PHASE PRIMARY CABLE AND STEP–DOWN TRANSFORMER WITH LOW VOLTAGE METERING.

3.0 PLANT SERVICE DESIGN

a. 480 VOLT, 3–PHASE, 3–WIRE, SOLID GROUNDED SYSTEM.

b. 120/280 VOLT, 3–PHASE, 4–WIRE, SOLID GROUNDED NEUTRAL SYSTEM.

c. POWER FACTOR 90 PERCENT OR GREATER.

4.0 LIGHTING DESIGN

a. PROCESSING & TRANSFER BLDG. INTERIOR.

– 30 FOOT CANDLES
– METAL HALIDE LAMPS
– 480 VOLT BALLAST

b. BLDG. EXTERIOR AND STREET LIGHTING.

– 3–5 FOOT CANDLES
– METAL HALIDE LAMPS
– 480 VOLT BALLAST

c. OFFICE INTERIOR

– 60–80 FOOT CANDLES
– FLUORESCENT LAMPS
– 120 VOLT BALLAST

No.	DATE	BY	REVISION
C	10/5	RWC	ISSUED FOR ADDENDA #1
B	9/21	RWC	CLIENT REVIEW– PR–92–13
B	9/4	RWC	BID PURPOSES
B	8/21	RWC	REFERENCE/OWNER REVIEW
A	7/17,21	RWC	REFERENCE/OWNER REVIEW

JOB No. 78783	DESIGNED:	PROJECT ENGINEER: RWC	
SCALE: NONE	DRAWN BY: H.HOLT	APPROVED BY:	
	CHECKED BY:	DATE:	

URS CONSULTANTS

WESTERN REGION
500 N.E. MULTNOMAH
PORTLAND OREGON
97232

CITY OF SUNNYVALE CALIFORNIA

CITY OF SUNNYVALE
CALIFORNIA

SMaRT STATION
GENERAL
DESIGN CRITERIA

DRAWING NUMBER: 005

SHEET 5/74

ISSUE C

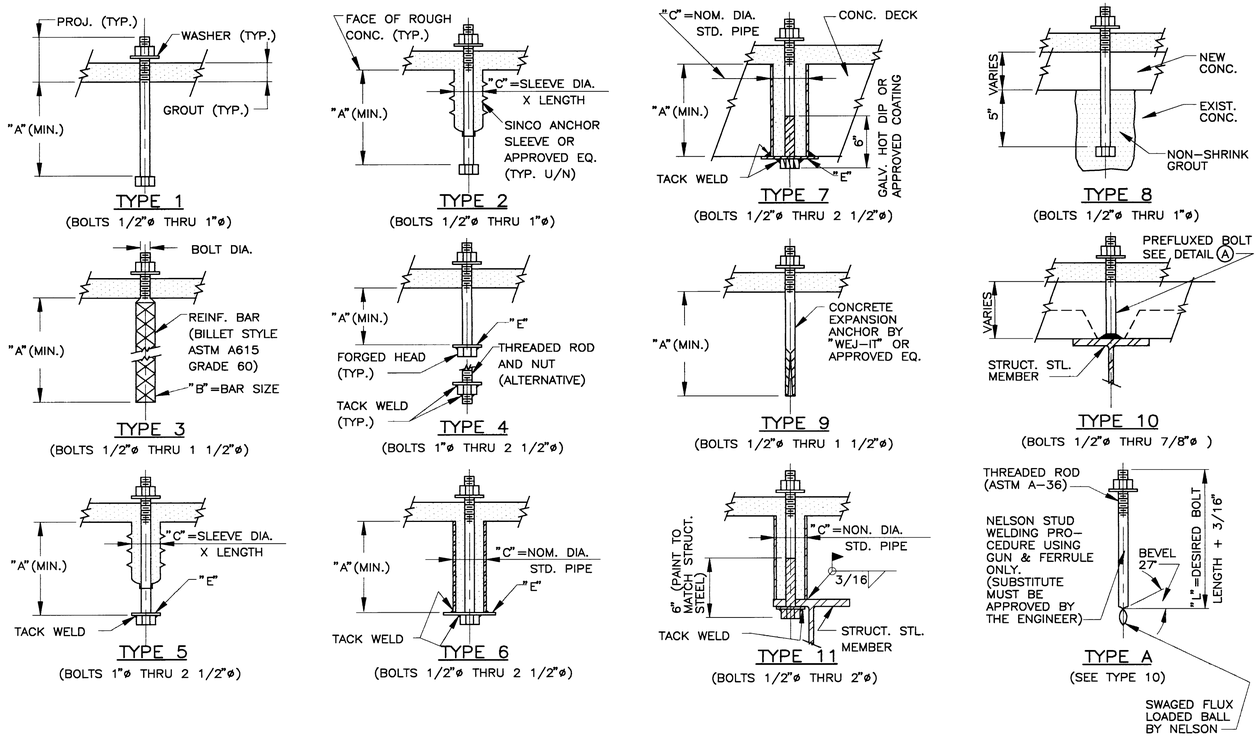

ANCHOR BOLT DIMS. FOR 4000 P.S.I. CONC. ONLY													
BOLT DIA.	TYPE 1	TYPE 2		TYPE 3		TYPE 4	TYPE 5		TYPE 6 & 7		TYPE 9	TYPE 11	PLATE SIZE "E" FOR BOLT TYPES 4 THRU 7 ONLY
	A(MIN.)	A(MIN.)	C	A(MIN.)	B	A(MIN.)	A(MIN.)	C	A(MIN.)	C	A(MIN.)	C	
1/2"	10"	10"	2"x5"	1'-3"	#6				8"	1 1/2"	5"	1 1/2"	1/2x4x0'-4"
5/8"	10"	10 1/2"	2"x7"	1'-6"	#7				8"	1 1/2"	5"	1 1/2"	1/2x4x0'-4"
3/4"	10"	11"	2"x7"	1'-9"	#8				8"	2"	7"	2"	1/2x4x0'-4"
7/8"	10"	11 1/2"	2"x7"	2'-2"	#9				8"	2"	7"	2"	5/8x4x0'4"
1"		15"	3"x10"	2'-9"	#10	1'-3"	1'-3"	3"x10"	8"	2"	7"	2"	3/4x4x0'-4"
1 1/8"				3'-5"	#11	1'-4"	1'-4"	3"x10"	9"	2 1/2"	7"	2 1/2"	7/8x5x0'-5"
1 1/4"				4'-4"	#14	1'-5"	1'-4 1/2"	3"x10"	10"	2 1/2"	7"	2 1/2"	1x5x0'-5"
1 3/8"				5'-3"	#14	1'-6"	1'-10"	4"x15"	11"	2 1/2"	—	2 1/2"	1x6x0'-6"
1 1/2"				7'-0"	#14	1'-7"	1'-10 1/2"	4"x15"	1'-0"	3"	8"	2 1/2"	1 1/8x6x0'-6"
1 3/4"						1'-9"	2'-0"	4"x15"	1'-2"	3"		3"	1 3/8x7x0'-7"
2"						1'-11"	2'-4"	4"x18"	1'-4"	3"		3"	1 1/2x8x0'-8"
2 1/4"						2'-0"	2'-6"	4"x18"	1'-5"	3 1/2"			1 5/8x9x0'-9"
2 1/2"						2'-3"	3'-1"	6"x24"	1'-8"	3 1/2"			1 7/8x10x0'-10"

WHEN GIVEN, THIS DIMENSION SUPERSEDES TABULATED DIM.

6 – AB – 1"ø – T4 – 4" ("A" = 10")

QUANTITY — SIZE — TYPE — PROJECTION

TYP. FOR BOLTS TYPE – 1 THRU 9

6 – AB – 1"ø – T10

(TOP OF BOLT EL. 98'-4")

TYP. FOR BOLTS TYPE – 10 & 11

EXPLANATION OF ANCHOR BOLT CALL-UPS

NOTES

1.) UNLESS NOTED ANCHOR BOLTS SHALL CONFIRM TO ASTM A307 GRADE "A" AND BE FABRICATED FROM ASTM A36 STEEL AND PROVIDED WITH HEAVY HEX NUTS AND HEX HEADS.

2.) WASHERS MAY BE "MILD STEEL FLAT WASHERS" (CONFORMING TO ANSI B-27.2) OR "PLAIN HARDENED WASHERS" (CONFORMING TO ASTM A325)

3.) PLATES SHALL CONFORM TO ASTM A36.

4.) STEEL SLEEVES SHALL CONFORM TO ASTM A53 TYPE A OR B, OR ASTM A501.

5.) GALVANIZED PORTIONS SHALL CONFORM TO ASTM A153.

6.) GROUT SHALL BE A NON-SHRINK, NON-METALLIC, FLOWABLE HIGH STRENGTH GROUT. (SEE SPECS.)

7.) ANCHOR BOLTS SHALL BE THREADED FOR FULL PROJECTION ABOVE ROUGH CONCRETE. (EXCEPT TYPE 9)

8.) BASE PLATE LEVELING
ANCHOR BOLTS MAY BE USED FOR LEVELING WITH DOUBLE NUTS. HOWEVER, PRIOR TO TIGHTENING, THE BASE PLATE MUST BE HARDSHIMMED AND LEVELING NUTS BACKED OFF. EACH ANCHOR BOLT MUST HAVE ITS OWN SHIM PACK AND THE BOLT TIGHTENED PRIOR TO GROUTING.

9.) ANCHOR BOLT TIGHTENING
a.) BRING ALL BOLTS IN A BASE PLATE TO A "SNUG TIGHT" CONDITION. (TO A TIGHTNESS ATTAINED BY A FEW IMPACTS OF AN IMPACT WRENCH OR THE FULL EFFORT OF A MAN USING AN ORDINARY SPUD WRENCH.)
b.) FOLLOWING THIS INITIAL OPERATION, RETIGHTEN ALL BOLTS IN THE BASE PLATE TO THE "SNUG TIGHT" CONDITION.
c.) FOR VIBRATION MACHINE LOADS, GROUT AND RUN MACHINERY, AFTER COMPLETING STEP (b) STOP MACHINERY AND REPEAT STEP (b).

10.) GROUTING
BASE PLATES SHALL BE GROUTED IMEDIATELY AFTER BOLT TIGHTENING. NO MOISTURE OR FORIEGN MATERIALS SHALL BE ALLOWED TO COME INTO CONTACT WITH THE UNDERSIDE OF PLATE OR ANCHOR BOLT SLEEVES PRIOR TO GROUTING.

ANCHOR BOLT DETAILS
DETAIL – 1

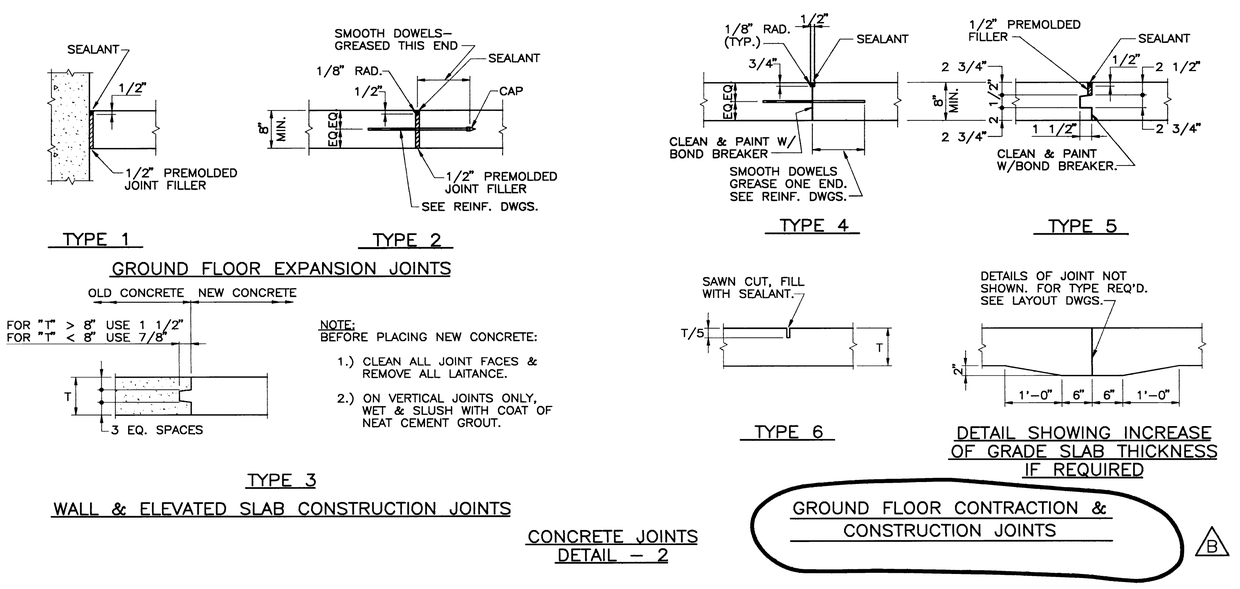

CONCRETE JOINTS
DETAIL – 2

GROUND FLOOR CONTRACTION & CONSTRUCTION JOINTS

B

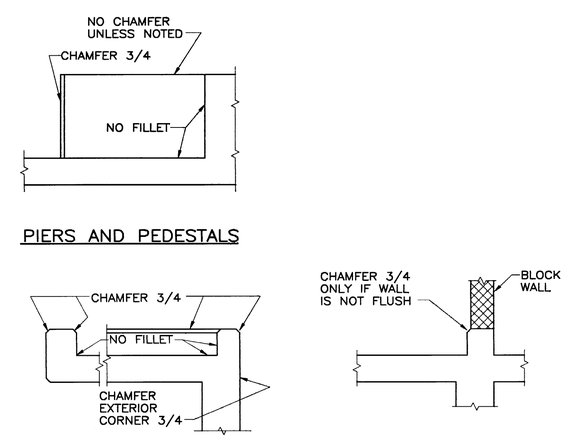

CONCRETE FILLETS
DETAIL – 3

No.	DATE	BY	REVISION
B	10/5	RWC	ISSUED FOR ADDENDA #1
A	9/21	RWC	CLIENT REVIEW– PR-92-13
A	9/4	RWC	BID PURPOSES
A	7/21	RWC	FOR OWNER REVIEW

JOB No. 78783	DESIGNED:	PROJECT ENGINEER: RWC
SCALE:	DRAWN BY: H.HOLT	APPROVED BY:
	CHECKED BY:	DATE:

URS CONSULTANTS

WESTERN REGION
500 N.E. MULTNOMAH
PORTLAND OREGON
97232

CITY OF SUNNYVALE CALIFORNIA

CITY OF SUNNYVALE
CALIFORNIA

SMaRT STATION
GENERAL
STRUCTURAL STANDARDS SHEET 1

DRAWING NUMBER: 007

SHEET 6/74

ISSUE B

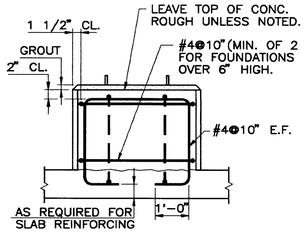

FOUNDATIONS UNDER 1'-6" HIGH

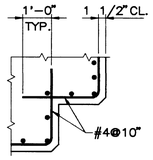

REINFORCING AT INTERIOR CORNERS

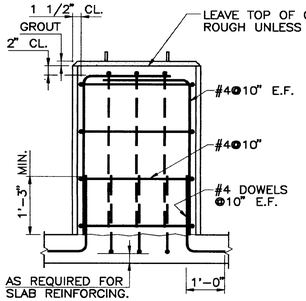

FOUNDATIONS OVER 1'-6" HIGH

NOTES:

1.) ROUGHEN CONC. UNDER FOUNDATION IF PLACED AFTER SLAB IS IN PLACE.

2.) REFER TO MECHANICAL INSTALLATION CONTRACT SPECIFICATION FOR GROUT BENEATH EQUIPMENT.

3.) ALL GROUT TO BE PLACED AFTER BASE PLATES ARE SET, ALIGNED AND LEVELED.

DRAFTSMAN NOTE: LARGE PADS WILL NOT USE THE STANDARD REINFORCING DETAILS – REFER TO THE PROJECT ENGINEER.

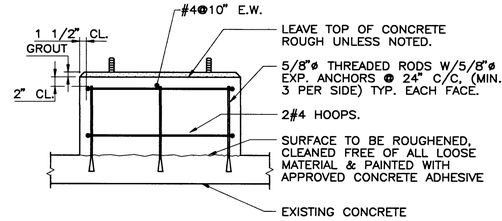

FOUNDATIONS UNDER 1'-6" HIGH

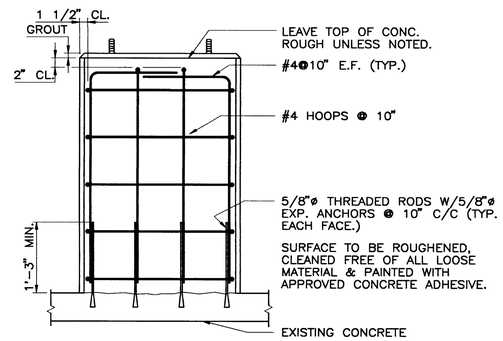

FOUNDATIONS OVER 1'-6" HIGH

CONCRETE DETAILS
DETAIL – 4

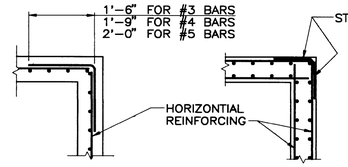

WALL CORNER REINFORCING

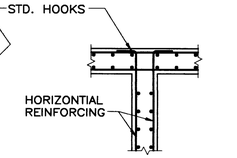

WALL INTERSECTION REINFORCING

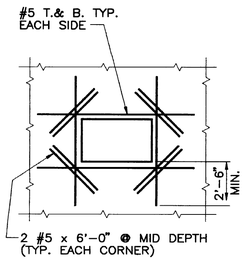

SQUARE OR RECTANGULAR

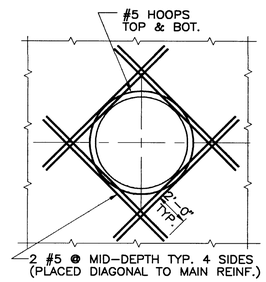

CIRCULAR

ADDITIONAL REINFORCING AT WALL & FLOOR OPENINGS

(UNLESS NOTED OTHERWISE ON LAYOUT DRAWINGS)
NOTE: FOR OPENINGS LESS THAN 12" ACROSS DEFLECT PRIMARY REINF. AROUND OPENINGS.

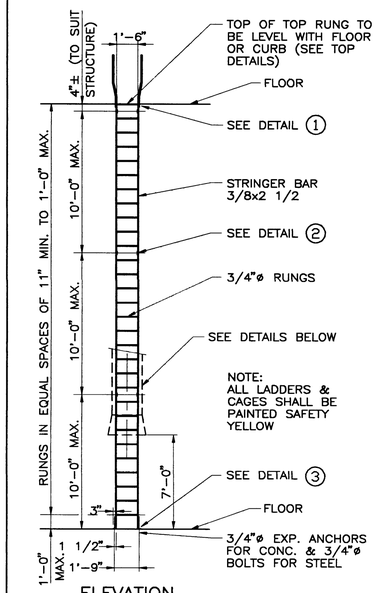

ELEVATION
STEP-THRU LADDERS

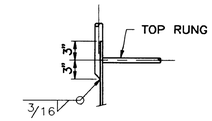

DETAIL – 1

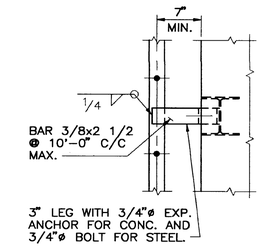

DETAIL – 2

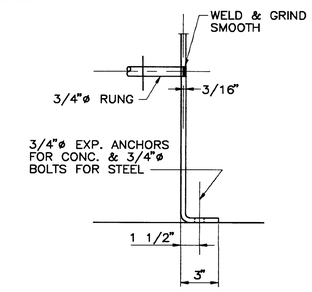

DETAIL – 3

PLATE STRINGER DETAILS

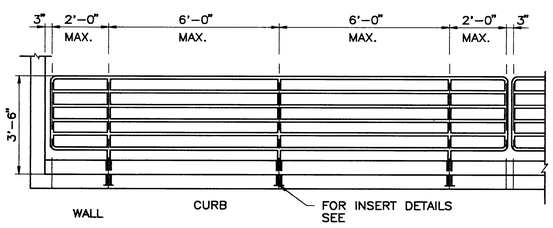

ELEVATION

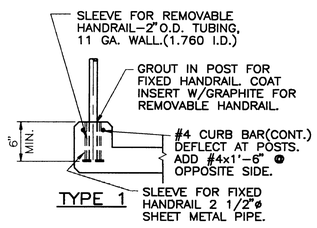

TYPE 1

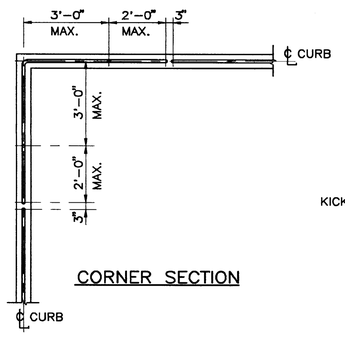

CORNER SECTION

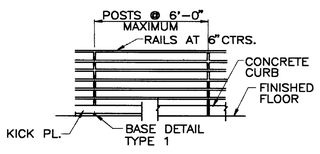

TYP. HANDRAIL SPACING

NOTES:

1.) HANDRAIL & POSTS TO BE 1 1/4"ø SCHEDULE 40 STEEL PIPE.

2.) WELDED CONSTRUCTION.

3.) ALL SHARP CORNERS & ROUGH EDGES TO BE GROUND SMOOTH AFTER FABRICATION.

HANDRAIL DETAILS
DETAIL – 5

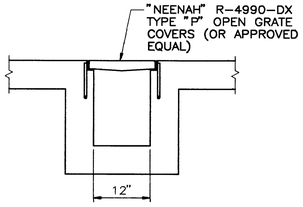

TYPICAL SECTION
3/4"=1'-0"

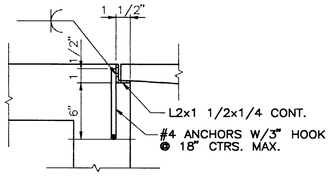

CORNER DETAIL
1 1/2" = 1'-0"

TRENCH COVERS
DETAIL – 6

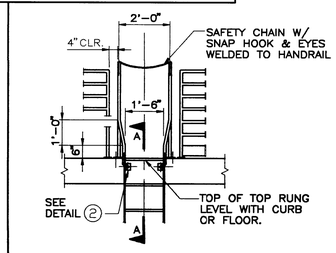

STEP – THRU LADDER TO CONCRETE

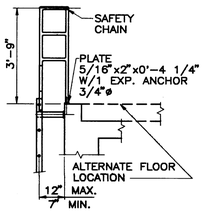

A – A

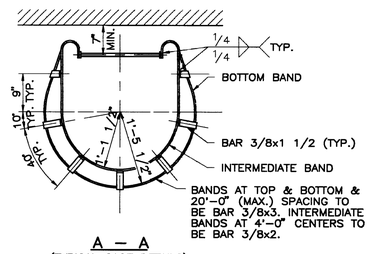

A – A
(TYPICAL CAGE DETAILS)

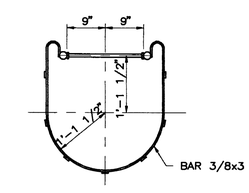

B – B
(BAND AT FLOOR OR ROOF LEVEL)

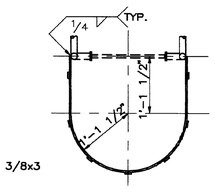

C – C
(TOP BAND)

STEEL LADDERS
DETAIL – 7

No.	DATE	BY	REVISION
C	9/14	RWC	HANDRAIL REV.D– BID PURPOSES
B	9/4	RWC	BID PURPOSES
B	8/21	RWC	LADDER DETAILS ADDED/OWNER REVIEW
A	7/21	RWC	OWNER REVIEW

JOB No. 78783	DESIGNED:	PROJECT ENGINEER: RWC
SCALE:	DRAWN BY: H.HOLT	APPROVED BY:
	CHECKED BY:	DATE:

URS CONSULTANTS

WESTERN REGION
500 N.E. MULTNOMAH
PORTLAND OREGON
97232

CITY OF SUNNYVALE CALIFORNIA
PR-92-15

SMaRT STATION
GENERAL
STRUCTURAL STANDARDS SHEET 2

SHEET 7 / 74

DRAWING NUMBER: 008

ISSUE C

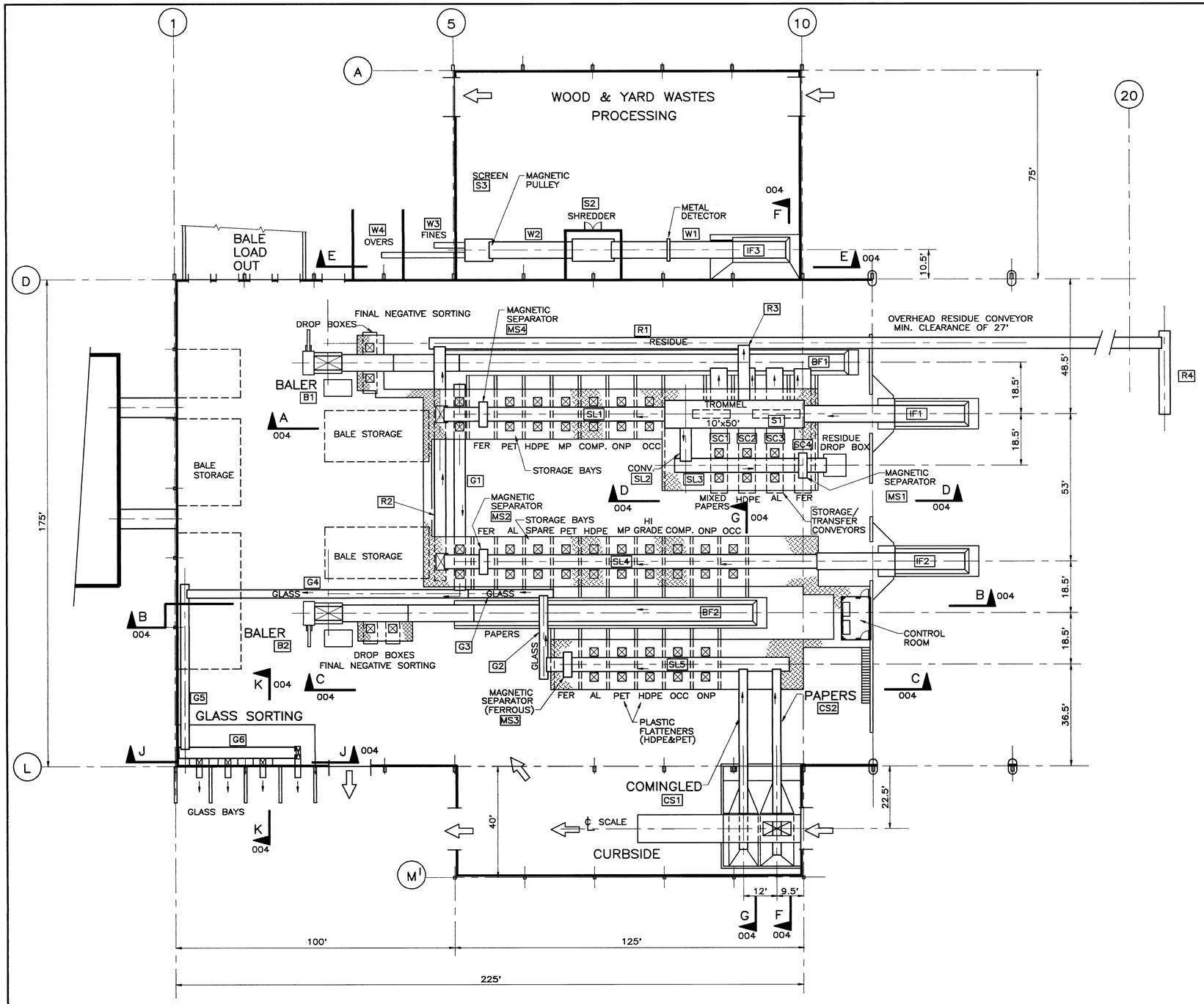

EQUIPMENT LIST

EQUIPMENT No.	DESCRIPTION	SIZE	REMARKS	CAPACITIES
IF1	CHAIN DRIVEN, RUBBER APRON CONVEYOR	72"	IN-FLOOR (TIPPING FLOOR)	28 TO 56 TPH VARIABLE SPEED
IF2	CHAIN DRIVEN, RUBBER APRON CONVEYOR	72"	IN-FLOOR (TIPPING FLOOR)	28 TO 56 TPH VARIABLE SPEED
IF3	DRAG CHAIN, FEED CONVEYOR	60"	IN-FLOOR (WOOD & YARD WASTE)	20 TPH VARIABLE SPEED
BF1	CHAIN DRIVEN, RUBBER APRON CONVEYOR	72"	BALER FEED CONVEYORS	50 TPH VARIABLE SPEED
BF2	CHAIN DRIVEN, RUBBER APRON CONVEYOR	72"	BALER FEED CONVEYORS	50 TPH VARIABLE SPEED
W1	RUBBER TROUGHING, CONVEYOR-CLEATED	60"	WOOD & YARD WASTE	20 TPH
W2	RUBBER TROUGHING, CONVEYOR-CLEATED	48"	WOOD & YARD WASTE	20 TPH
W3 & W4	RUBBER TROUGHING, CONVEYOR-CLEATED	36"	WOOD & YARD WASTE	10 TPH
SL1	CHAIN DRIVEN, FLAT RUBBER BELT CONVEYOR	60"	SORTING LINE	15 TO 30 TPH VARIABLE SPEED
SL2	CHAIN DRIVEN, RUBBER APRON CONVEYOR	48"	FROM TROMMEL	20 TPH
SL3	CHAIN DRIVEN, FLAT RUBBER BELT CONVEYOR	48"	SORTING LINE	16 TPH
SL4	CHAIN DRIVEN, FLAT RUBBER BELT CONVEYOR	60"	SORTING LINE	15 TO 30 TPH VARIABLE SPEED
SL5	CHAIN DRIVEN, FLAT RUBBER BELT CONVEYOR	48"	SORTING LINE	8 TO 12 TPH VARIABLE SPEED
SC1 TO SC4 INCL.	CHAIN DRIVEN, RUBBER APRON CONVEYOR	60"	STORAGE CONV.	20 TPH
R1 & R4	CHAIN DRIVEN, RUBBER APRON CONVEYOR	48"	RESIDUE CONVS.	40 TPH
R2	CHAIN DRIVEN, RUBBER APRON CONVEYOR	36"	RESIDUE CONVS.	20 TPH
R3	CHAIN DRIVEN, RUBBER APRON CONVEYOR	36"	RESIDUE CONVS.	20 TPH
G1 TO G6 INCL.	RUBBER BELT, SLIDER PAN TYPE	18"	GLASS CONVS.	3 TPH
CS1	CHAIN DRIVEN, RUBBER APRON CONVEYOR	24"	CURBSIDE COMINGLED	10 TPH
CS2	CHAIN DRIVEN, RUBBER APRON CONVEYOR	42"	CURBSIDE PAPERS	18 TPH
B1 & B2	BALERS	—	SEE NOTE 1	
MS1 TO MS4 INCL.	MAGNETIC SEPARATORS	—		
S1	TROMMEL	10'ø x 50'	SEE NOTE 1	40 TPH
S2	SHREDDER	—	SEE NOTE 1	20 TPH
S3	SCREEN FOR CHIPS & COMPOST	—	SEE NOTE 1	20 TPH

MISCELLANEOUS

ONE SCALE 10'x60' (SEE NOTE 1)
FOUR PLASTIC FLATTENERS (SEE NOTE 1)
ONE METAL DETECTOR

NOTES:

1. FOR FURTHER DESCRIPTION OF ALL CONVEYORS, BALERS, SHREDDER & TROMMEL SEE "DESCRIPTION OF TRANSFER & MATERIALS RECOVERY SYSTEM OPERATIONS"

NOT IN THIS CONTRACT
THIS DRAWING ISSUED
FOR REFERENCE ONLY

20 0 20 40
SCALE IN FEET

No.	DATE	BY	REVISION
C	9/4	RWC	FOR REFERENCE ONLY
B	8/21	RWC	FOR OPERATIONS RFP
A	6/23	RWC	FOR PERMIT PURPOSES

JOB No. 78783
SCALE: 1"=20'
DESIGNED:
DRAWN BY: VCH
CHECKED BY: RWC
PROJECT ENGINEER: RWC
APPROVED BY:
DATE:

URS CONSULTANTS
WESTERN REGION
500 N.E. MULTNOMAH
PORTLAND OREGON
97232

CITY OF SUNNYVALE CALIFORNIA
PR-92-15

SMaRT STATION
GENERAL
MRF EQUIPMENT

DRAWING NUMBER: 010
SHEET 8/74
ISSUE C

PERIMETER CURVE DATA

CURVE	RAD	DELTA	LENGTH	PC	PT
C1	50'	84°	73.30'	E1,760.85 N10,516.00	L1
C2	100'	35°	61.08'	L1	L2
C3	60'	45°	47.12'	L2	L3
C4	60'	94°	98.44'	L3	L4
C5	60'	80°	83.78'	L5	L6
C6	170'	11°34'28"	34.34'	L9	E2,096.28 N10,543.00
C7	20'	79°09'29"	27.63'	C6	E2,085.68 N10,519.82
C8	32'	90°	50.26'	C7	L10
C9	160'	30°	83.76'	L10	L11
C10	195'	30°	102.1'	L12	L13
C11	115'	30°	60.21'	L13	L14
C12	70'	47°06'26"	57.55'	L14	E1,970.44 N10,468.37
C13	50'	61°41'17"	56.45'	E2,068.14 N10,491.21	E2,058.70 N10,543.87

PERIMETER LINE DATA

LINE	BEARING	LENGTH	START	END
L1	N6°E	222.80	E1,810.57 N10,560.77	E1,833.86 N10,782.35
L2	N41°E	179.51'	E1,857.84 N10,837.51	E1,975.61 N10,972.98
L3	N86°E	513.35'	E2,016.71 N10,993.48	E2,528.81 N11,029.29
L4	SOUTH	269.43	E2,593.00 N10,969.43	L5
L5	S10°W	91.81	E2,593.00 N10,700.00	E2,577.06 N10,609.58
L6	WEST	251.97'	E2,517.97 N10,560.00	L7
L7	S63°26'6"W	26.83	E2,266.00 N10,560.00	L8
L8	WEST	100.00	E2,242.00 N10,548.00	L9
L9	N63°26'6"W	15.11	E2,142.00 N10,548.00	E2,128.49 N10,554.76
L10	N75°W	71.14	E2,124.87 N10,497.20	E2,193.59 N10,515.61
L11	S75°E	17.42	E2,276.41 N10,515.61	E2,293.23 N10,511.10
L12	S15°W	30.00	L11	E2,285.47 N10,482.12
L13	S75°W	61.87	E2,184.53 N10,482.12	E2,124.76 N10,466.11
L14	N75°W	40.87	E2,065.24 N10,466.11	E2,025.76 N10,476.69
L15	N75°W	63.73	E2,068.14 N10,491.21	E2,006.59 N10,507.70
L16	N55°14'11"E	63.43	L15	E2,058.70 N10,543.87

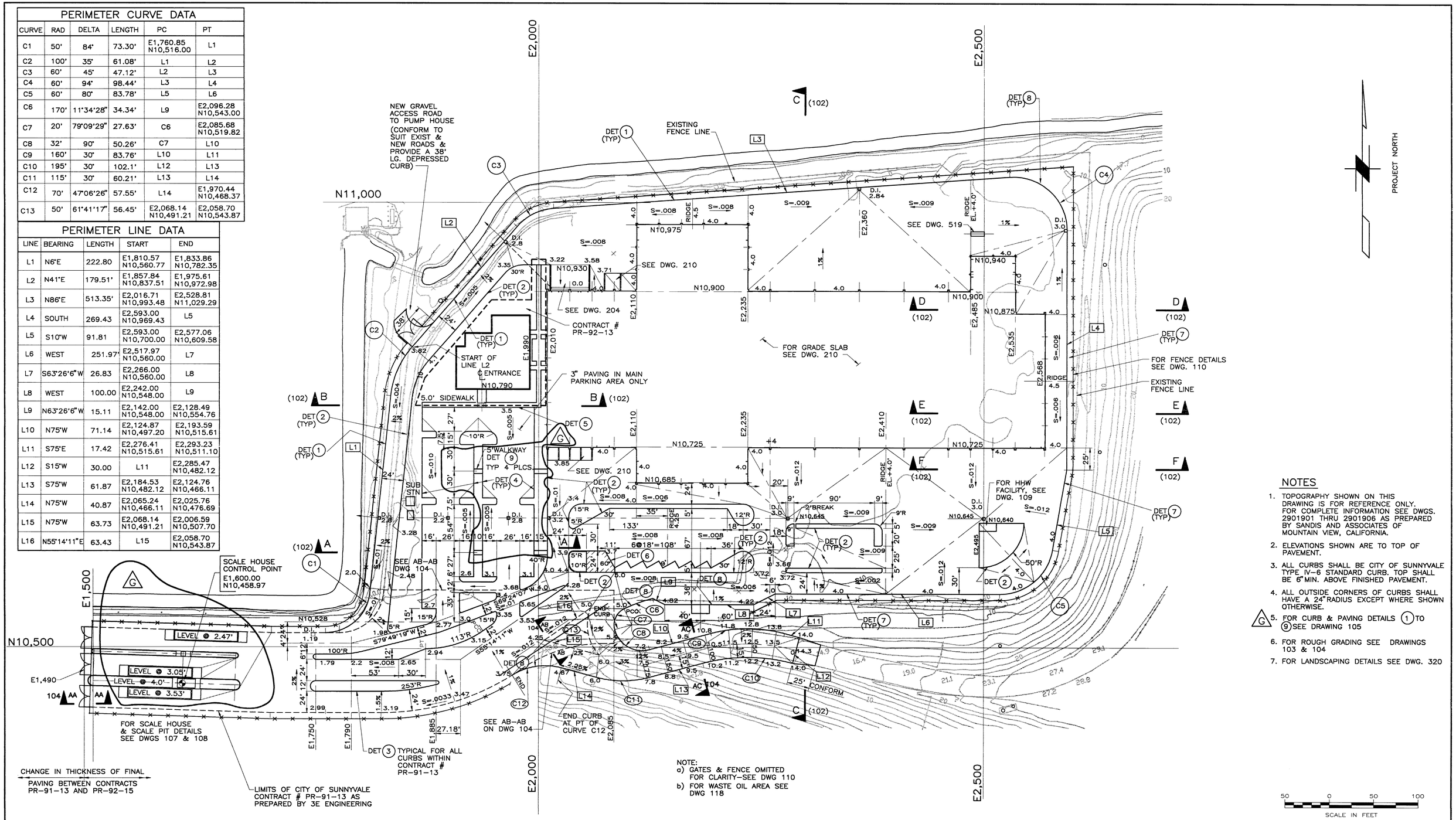

NOTE:
a) GATES & FENCE OMITTED FOR CLARITY-SEE DWG 110
b) FOR WASTE OIL AREA SEE DWG 118

NOTES

1. TOPOGRAPHY SHOWN ON THIS DRAWING IS FOR REFERENCE ONLY. FOR COMPLETE INFORMATION SEE DWGS. 2901901 THRU 2901906 AS PREPARED BY SANDIS AND ASSOCIATES OF MOUNTAIN VIEW, CALIFORNIA.
2. ELEVATIONS SHOWN ARE TO TOP OF PAVEMENT.
3. ALL CURBS SHALL BE CITY OF SUNNYVALE TYPE IV-6 STANDARD CURB. TOP SHALL BE 6" MIN. ABOVE FINISHED PAVEMENT.
4. ALL OUTSIDE CORNERS OF CURBS SHALL HAVE A 24" RADIUS EXCEPT WHERE SHOWN OTHERWISE.
5. (G) FOR CURB & PAVING DETAILS (1) TO (9) SEE DRAWING 105
6. FOR ROUGH GRADING SEE DRAWINGS 103 & 104
7. FOR LANDSCAPING DETAILS SEE DWG. 320

No.	DATE	BY	REVISION
G	10/5	RWC	ISSUED FOR ADDENDA #1
F	9/14	RWC	LANDFILL ACCESS & PARKING AREAS REVISED
E	9/4	RWC	BID PURPOSES
D	8/21	RWC	ENTRANCE REV'D / OWNER REVIEW
C	7/21	RWC	COMPACTOR ADDITION/OWNER REVIEW
B	7/1	RWC	FOR OWNER REVIEW
A	6/12	VCH	REVISED BUYBACK, PARKING & WOODWASTE AREAS

JOB No. 78783	DESIGNED: VCH	PROJECT ENGINEER: RWC	
SCALE: 1"=50'	DRAWN BY: VCH	APPROVED BY:	
	CHECKED BY: RWC	DATE:	

URS CONSULTANTS

WESTERN REGION
500 N.E. MULTNOMAH
PORTLAND OREGON
97232

CITY OF SUNNYVALE CALIFORNIA

CITY OF SUNNYVALE
CALIFORNIA

SMaRT STATION
SITE PREPARATION
GRADING & PAVING-FINISH ELEVATIONS

DRAWING NUMBER: 101

SHEET 9/74

ISSUE G

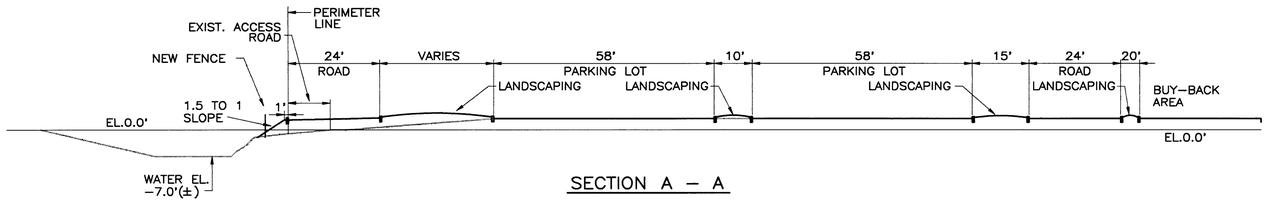

SECTION A – A

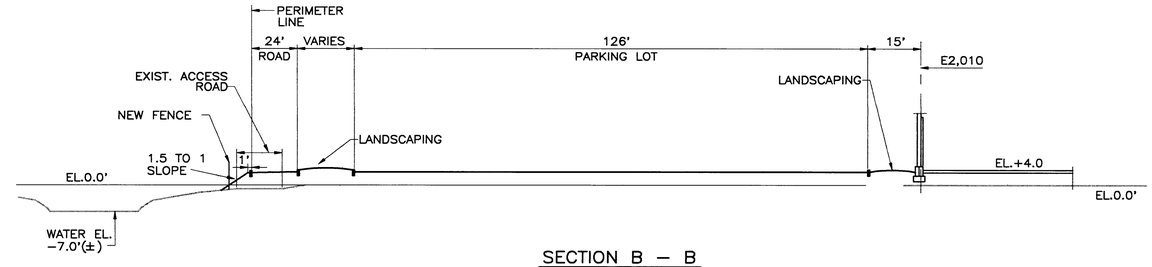

SECTION B – B

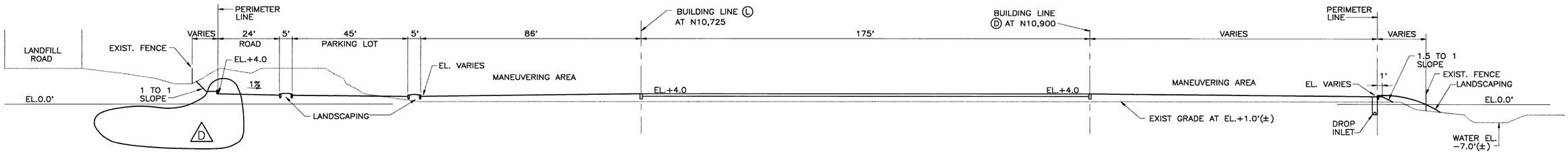

SECTION C – C

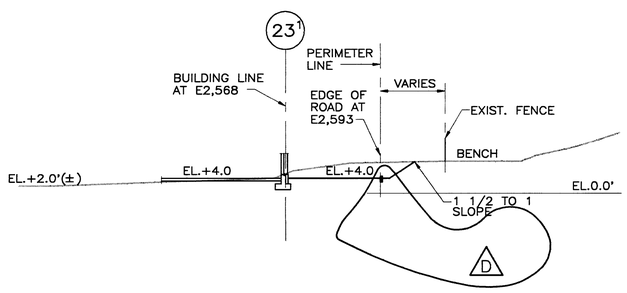

SECTION D – D

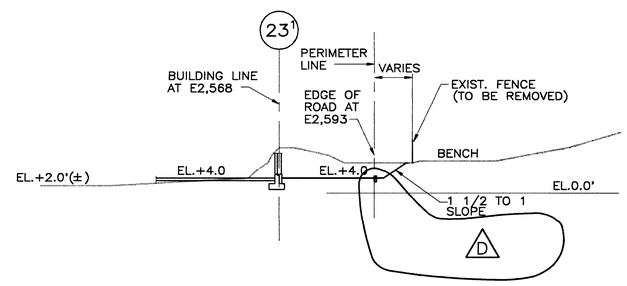

SECTION E – E

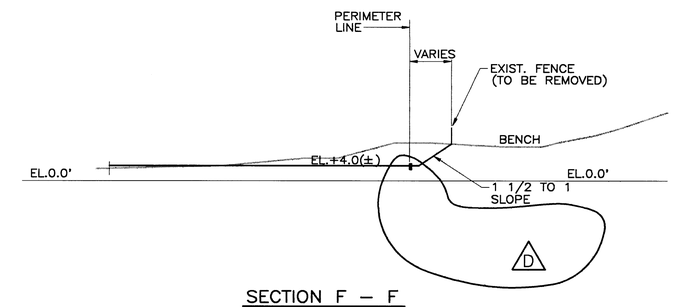

SECTION F – F

NOTES:
1.) FOR SECTION LOCATION SEE DWG. 101.

20 0 20 40
SCALE IN FEET

No.	DATE	BY	REVISION
D	10/5	RWC	ISSUED FOR ADDENDA #1
C	9/4	RWC	FOR BID PURPOSES
C	8/21	RWC	OWNER REVIEW
B	7/21	RWC	FOR COMPACTOR ADDITION/OWNER REVIEW
A	6/26	RWC	FOR OWNERS REVIEW

JOB No. 78783	DESIGNED: VCH	PROJECT ENGINEER: RWC
SCALE: 1"=20' UNLESS NOTED	DRAWN BY: VCH	APPROVED BY:
	CHECKED BY: RWC	DATE:

URS CONSULTANTS

WESTERN REGION
500 N.E. MULTNOMAH
PORTLAND OREGON
97232

CITY OF SUNNYVALE CALIFORNIA

CITY OF SUNNYVALE
CALIFORNIA

SMaRT STATION
SITE PREPARATION
GRADING & PAVING – SECTIONS SH. 1

DRAWING NUMBER: 102

SHEET 10/74

ISSUE D

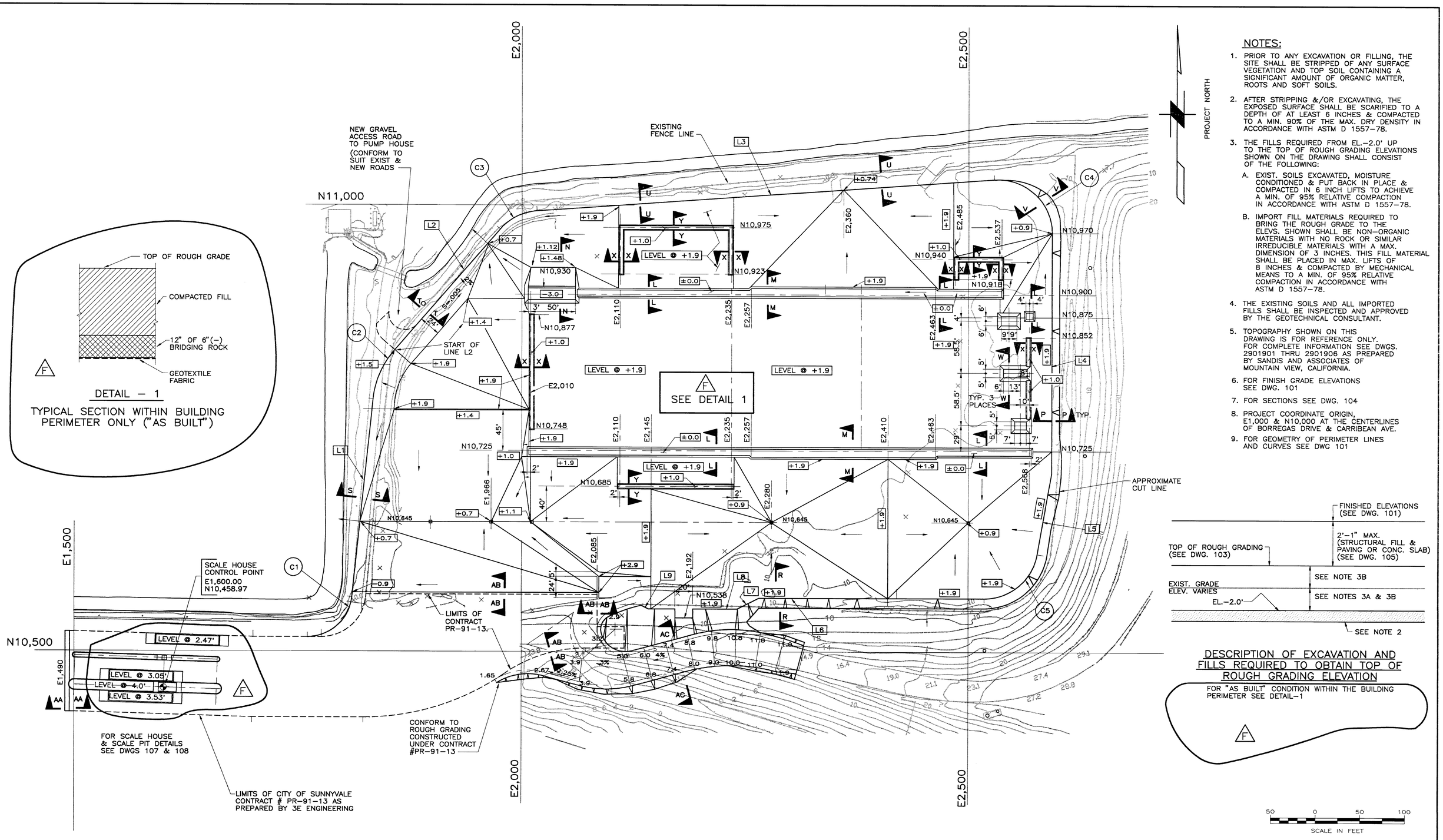

NOTES:

1. PRIOR TO ANY EXCAVATION OR FILLING, THE SITE SHALL BE STRIPPED OF ANY SURFACE VEGETATION AND TOP SOIL CONTAINING A SIGNIFICANT AMOUNT OF ORGANIC MATTER, ROOTS AND SOFT SOILS.
2. AFTER STRIPPING &/OR EXCAVATING, THE EXPOSED SURFACE SHALL BE SCARIFIED TO A DEPTH OF AT LEAST 6 INCHES & COMPACTED TO A MIN. 90% OF THE MAX. DRY DENSITY IN ACCORDANCE WITH ASTM D 1557-78.
3. THE FILLS REQUIRED FROM EL.-2.0' UP TO THE TOP OF ROUGH GRADING ELEVATIONS SHOWN ON THE DRAWING SHALL CONSIST OF THE FOLLOWING:
   A. EXIST. SOILS EXCAVATED, MOISTURE CONDITIONED & PUT BACK IN PLACE & COMPACTED IN 6 INCH LIFTS TO ACHIEVE A MIN. OF 95% RELATIVE COMPACTION IN ACCORDANCE WITH ASTM D 1557-78.
   B. IMPORT FILL MATERIALS REQUIRED TO BRING THE ROUGH GRADE TO THE ELEVS. SHOWN SHALL BE NON-ORGANIC MATERIALS WITH NO ROCK OR SIMILAR IRREDUCIBLE MATERIALS WITH A MAX. DIMENSION OF 3 INCHES. THIS FILL MATERIAL SHALL BE PLACED IN MAX. LIFTS OF 8 INCHES & COMPACTED BY MECHANICAL MEANS TO A MIN. OF 95% RELATIVE COMPACTION IN ACCORDANCE WITH ASTM D 1557-78.
4. THE EXISTING SOILS AND ALL IMPORTED FILLS SHALL BE INSPECTED AND APPROVED BY THE GEOTECHNICAL CONSULTANT.
5. TOPOGRAPHY SHOWN ON THIS DRAWING IS FOR REFERENCE ONLY. FOR COMPLETE INFORMATION SEE DWGS. 2901901 THRU 2901906 AS PREPARED BY SANDIS AND ASSOCIATES OF MOUNTAIN VIEW, CALIFORNIA.
6. FOR FINISH GRADE ELEVATIONS SEE DWG. 101
7. FOR SECTIONS SEE DWG. 104
8. PROJECT COORDINATE ORIGIN, E1,000 & N10,000 AT THE CENTERLINES OF BORREGAS DRIVE & CARRIBEAN AVE.
9. FOR GEOMETRY OF PERIMETER LINES AND CURVES SEE DWG 101

No.	DATE	BY	REVISION
F	10/5	RWC	ISSUED FOR ADDENDA #1
E	9/14	RWC	LANDFILL ACCESS AREA REVISED
D	9/4	RWC	ISSUE FOR CONSTRUCTION REF. FOR CONTRACT # PR-92-15
C	8/21	RWC	OWNER REVIEW
B	7/21	RWC	FOR COMPACTOR ADDITION / OWNER REVIEW
A	6/26	RWC	FOR OWNER REVIEW

JOB No.	DESIGNED:	PROJECT ENGINEER:
78783	VCH	RWC
SCALE:	DRAWN BY:	APPROVED BY:
1"=50'	VCH	
	CHECKED BY:	DATE:
	RWC	

URS CONSULTANTS

WESTERN REGION
500 N.E. MULTNOMAH
PORTLAND OREGON
97232

CITY OF SUNNYVALE CALIFORNIA

SMaRT STATION
SITE PREPARATION
GRADING AND PAVING – ROUGH GRADING

DRAWING NUMBER: 103

SHEET 11 / 74

ISSUE F

E1,350
N10,150

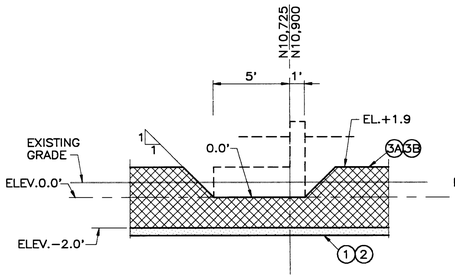

SECTION L – L

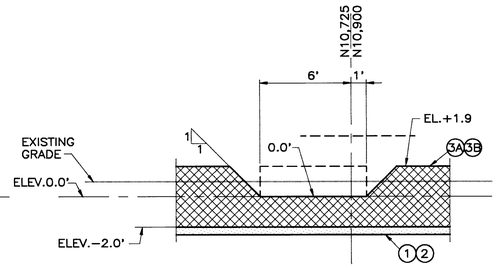

SECTION M – M

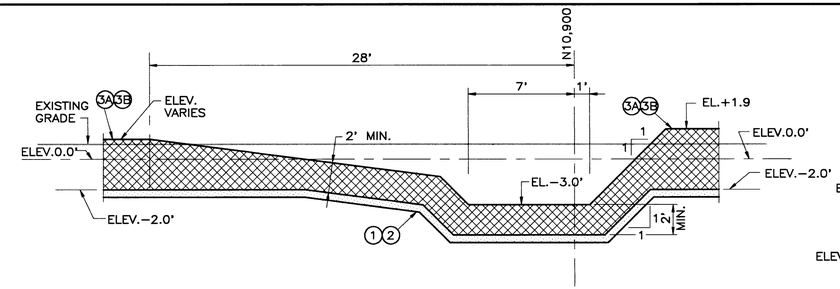

SECTION N – N

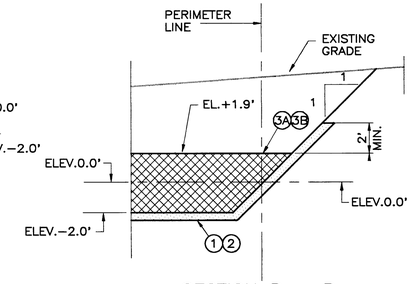

SECTION P – P

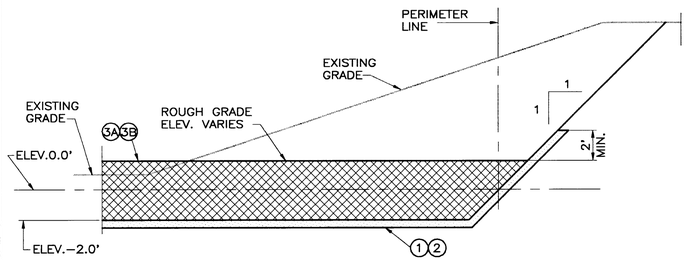

SECTION R – R

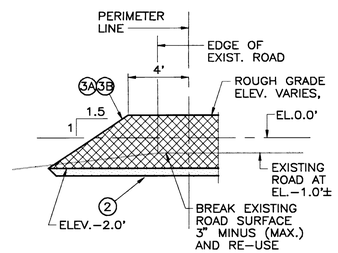

SECTION S – S

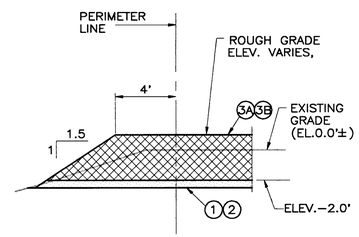

SECTION T – T

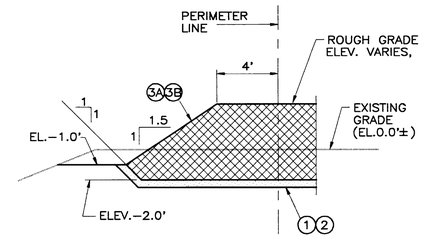

SECTION U – U

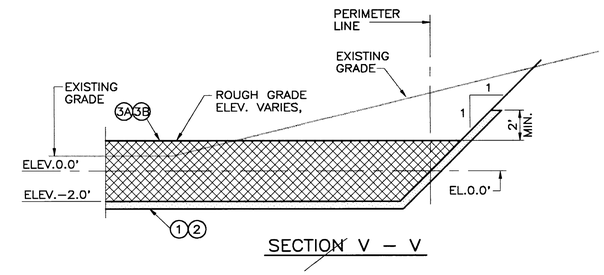

SECTION V – V

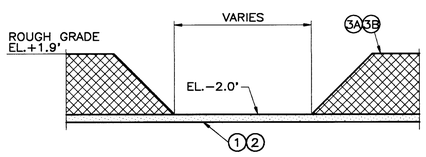

(TYP. ● COMPACTOR FOUNDATIONS)

SECTION W – W

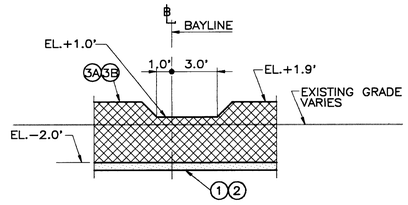

SECTION X – X

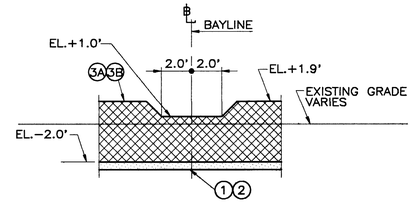

SECTION Y – Y

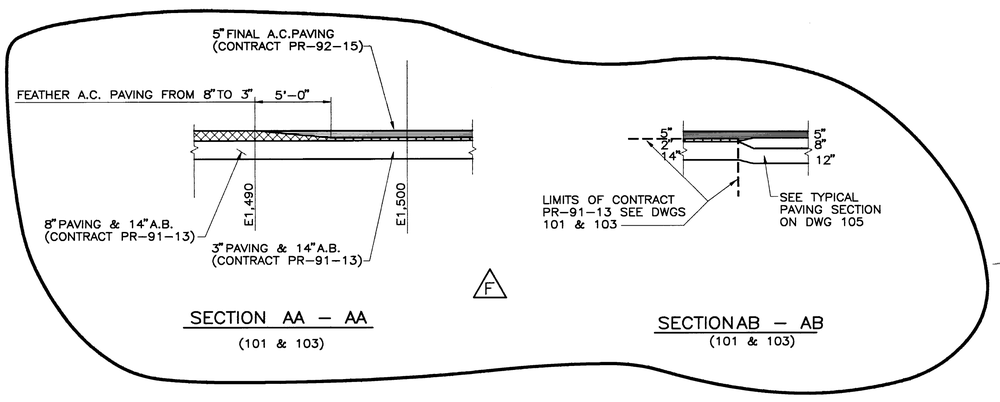

SECTION AA – AA

(101 & 103)

SECTIONAB – AB

(101 & 103)

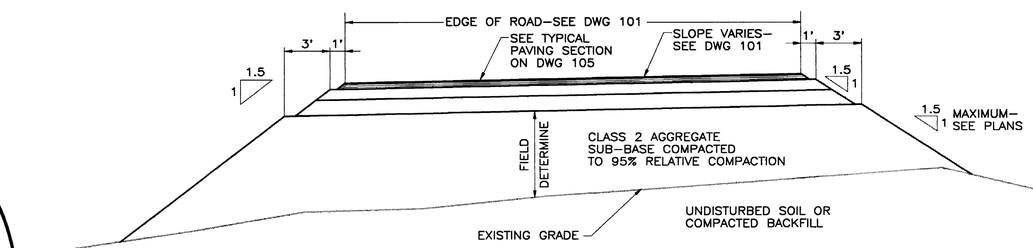

SECTIONAC – AC

(101 & 103)

NOTES:

1. FOR LOCATION OF ALL SECTIONS SEE DWG 103
2. (1) –DENOTES NOTE 1 ON DWG. 103 FOR ALL NOTES SEE DWG. 103
3. FOR "AS BUILT" CONDITION WITHIN BUILDING PERIMETER SEE DWG 103

F

5 0 5 10
SCALE IN FEET

No.	DATE	BY	REVISION
F	10/5	RWC	ISSUED FOR ADDENDA #1
E	9/14	RWC	LANDFILL ACCESS REVISED CONTRACTS PR-91-13 & PR-92-15
D	9/4	RWC	ISSUED FOR CONSTRUCTION REF. FOR CONTRACT #PR-92-15
C	8/21	RWC	SECTIONS ADDED / OWNER REVIEW
B	7/21	RWC	FOR COMPACTOR ADDITION / OWNER REVIEW
A	6/26	RWC	FOR OWNER REVIEW

JOB No.	DESIGNED:	PROJECT ENGINEER:
78783	VCH	RWC
SCALE:	DRAWN BY:	APPROVED BY:
1"=5'-0"	VCH	
	CHECKED BY:	DATE:
	RWC	

URS CONSULTANTS

WESTERN REGION
500 N.E. MULTNOMAH
PORTLAND OREGON
97232

CITY OF SUNNYVALE CALIFORNIA

CITY OF SUNNYVALE
CALIFORNIA

SMaRT STATION
SITE PREPARATION
GRADING & PAVING – SECTIONS SH. 2

SHEET 12/74

DRAWING NUMBER: 104

CADFILE=104E

ISSUE F

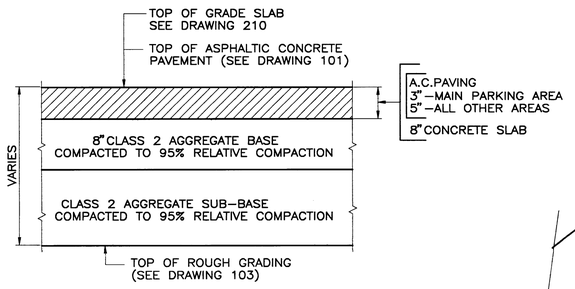

TYPICAL PAVING SECTION

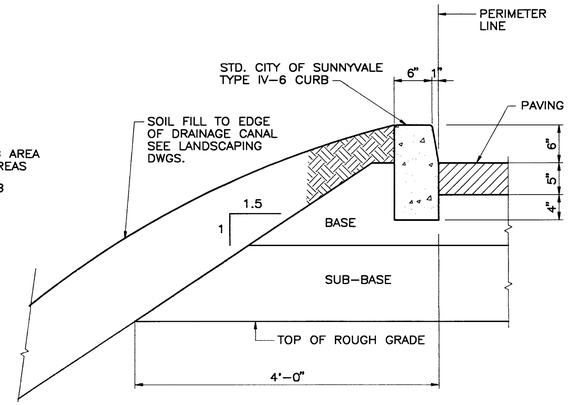

DETAIL – 1 (101)

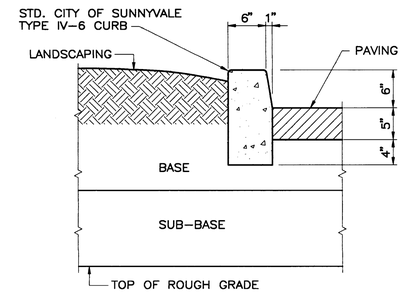

DETAIL – 2 (101)

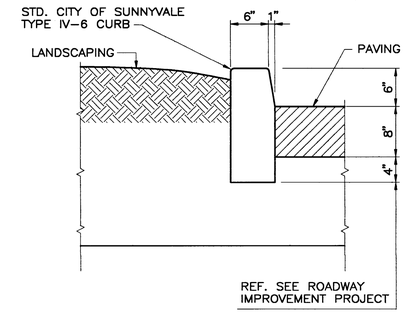

DETAIL – 3 (101)

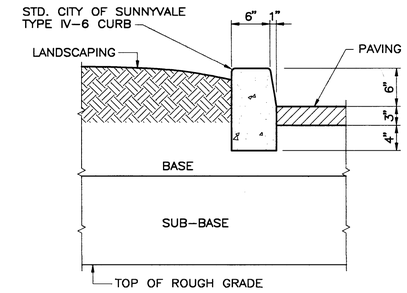

DETAIL – 4 (101)

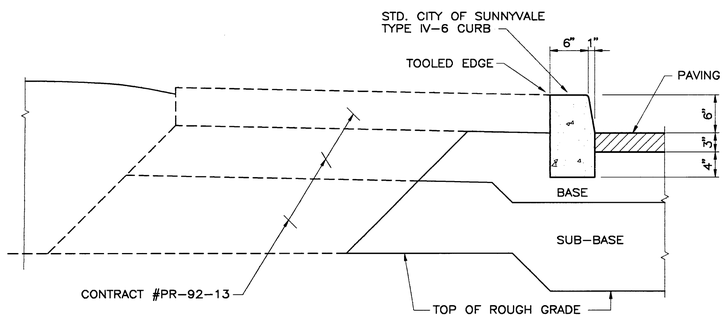

DETAIL – 5 (101)

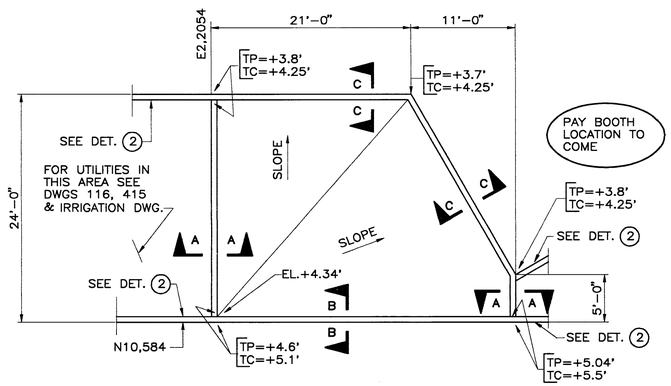

DETAIL – 6 (101)

1/8"=1'–0"

TC = TOP OF CURB
TP = TOP OF PAVEMENT

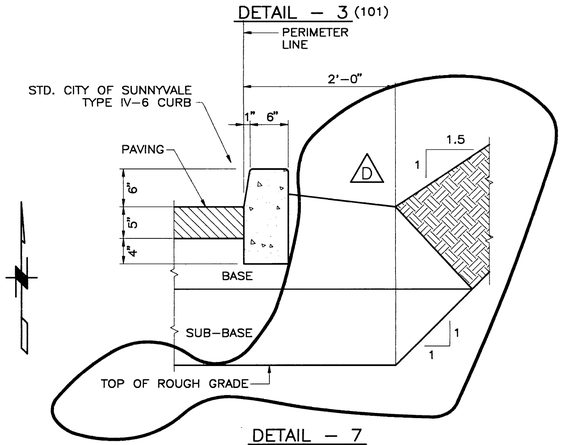

DETAIL – 7

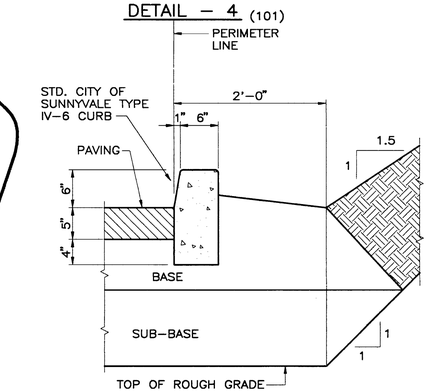

DETAIL – 8

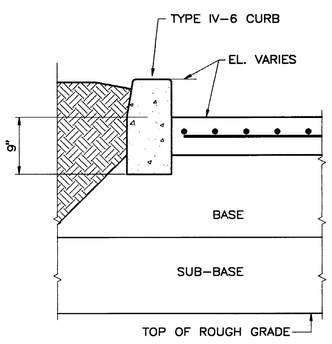

SECTION A – A

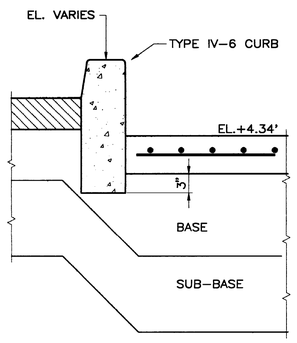

SECTION B – B

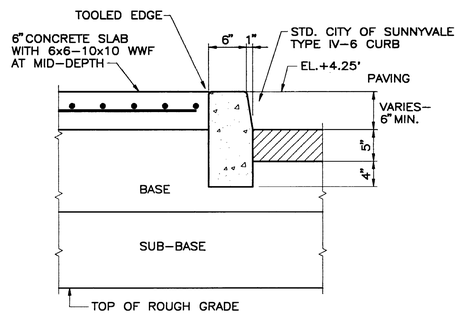

SECTION C – C

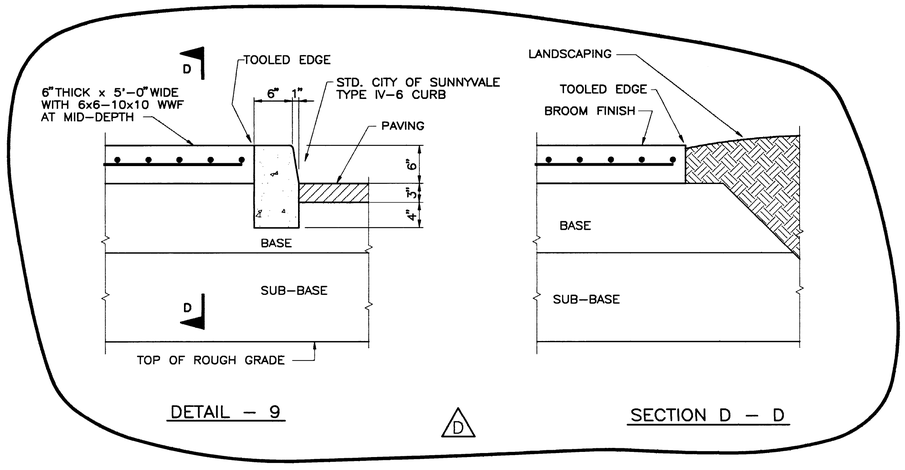

DETAIL – 9

D

SECTION D – D

NOTES:
1. FOR LOCATION OF DETAILS SEE DWG 101
2. FOR ROUGH GRADING SEE DWGS 103 & 104

1 0 1 2
SCALE IN FEET

No.	DATE	BY	REVISION
D	10/5	RWC	ISSUED FOR ADDENDA #1
C	9/14	RWC	TYP. PAVING SECT. REVISED– FOR BID PURPOSES
B	9/4	RWC	BID PURPOSES
B	8/21	RWC	DETAIL ADDED / OWNER REVIEW
A	7/21	RWC	FOR OWNER REVIEW

JOB No. 78783
SCALE: 1"=1' UNLESS NOTED
DESIGNED:
DRAWN BY: VCH
CHECKED BY:
PROJECT ENGINEER: RWC
APPROVED BY:
DATE:

URS CONSULTANTS

WESTERN REGION
500 N.E. MULTNOMAH
PORTLAND OREGON
97232

CITY OF SUNNYVALE CALIFORNIA

CITY OF SUNNYVALE
CALIFORNIA

SMaRT STATION
SITE PREPARATION
GRADING AND PAVING DETAILS

DRAWING NUMBER: 105

SHEET 13/74

ISSUE D