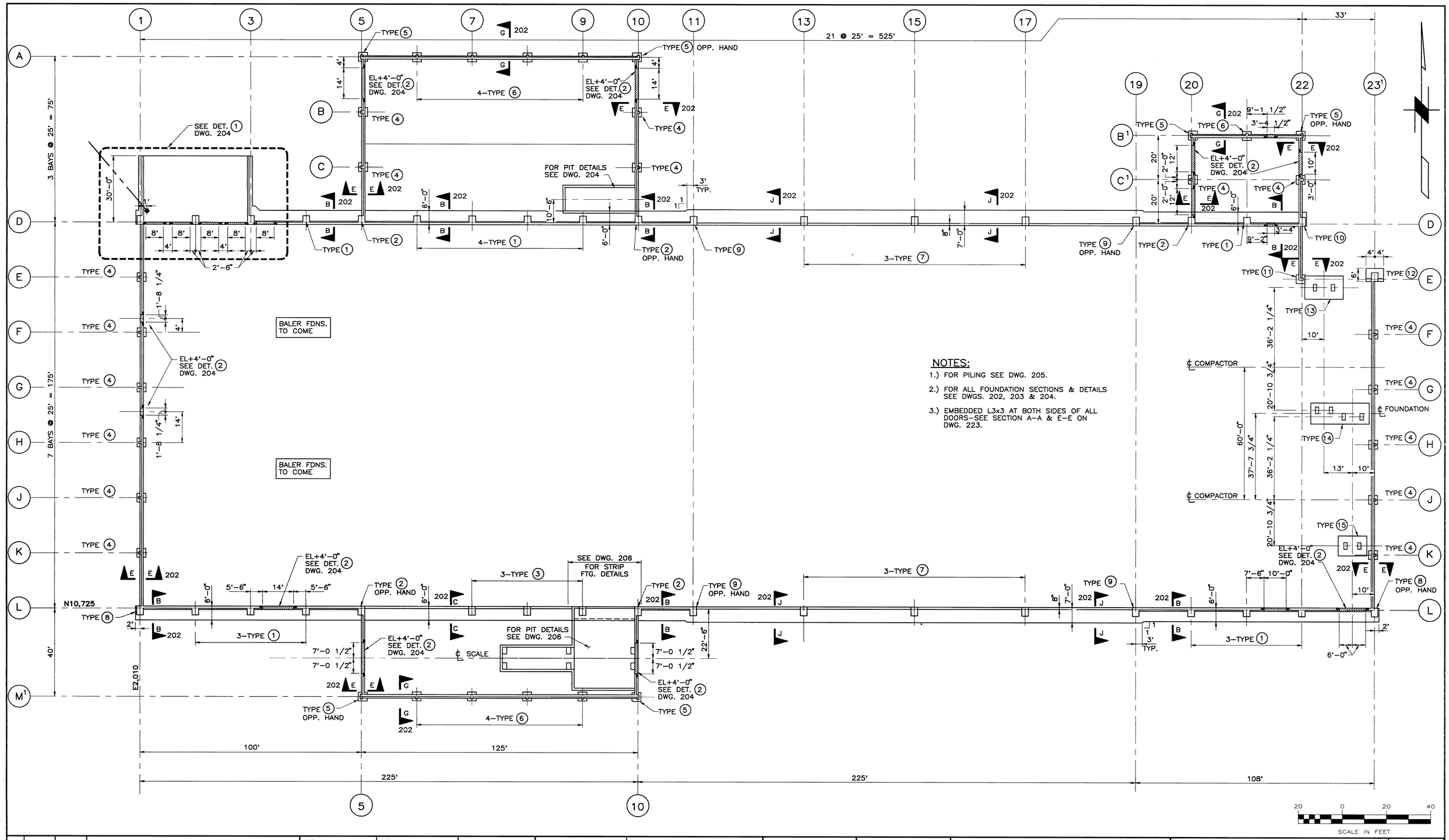

NOTES:

1.) FOR PILING SEE DWG. 205.

2.) FOR ALL FOUNDATION SECTIONS & DETAILS SEE DWGS. 202, 203 & 204.

3.) EMBEDDED L3x3 AT BOTH SIDES OF ALL DOORS–SEE SECTION A–A & E–E ON DWG. 223.

No.	DATE	BY	REVISION
D	9/4	RWC	BID PURPOSES
D	8/21	RWC	OWNER REVIEW
D	8/14	RWC	DOORS MOVED/OWNER REVIEW
C	7/21	RWC	OWNER REVIEW
B	7/17	RWC	FOR COMPACTOR ADDITION
A	7/1/92	RWC	FOR OWNERS REVIEW

JOB No. 78783	DESIGNED: VCH/DHP	PROJECT ENGINEER: RWC
SCALE: 1" = 20'	DRAWN BY: R.DUKE	APPROVED BY:
	CHECKED BY:	DATE:

URS CONSULTANTS

WESTERN REGION
500 N.E. MULTNOMAH
PORTLAND OREGON
97232

CITY OF SUNNYVALE CALIFORNIA

CITY OF SUNNYVALE
CALIFORNIA
PR-92-15

SMaRT STATION
STRUCTURAL
PILE CAP & GRADE BEAM PLAN

DRAWING NUMBER: 201

SHEET 27/74

ISSUE D

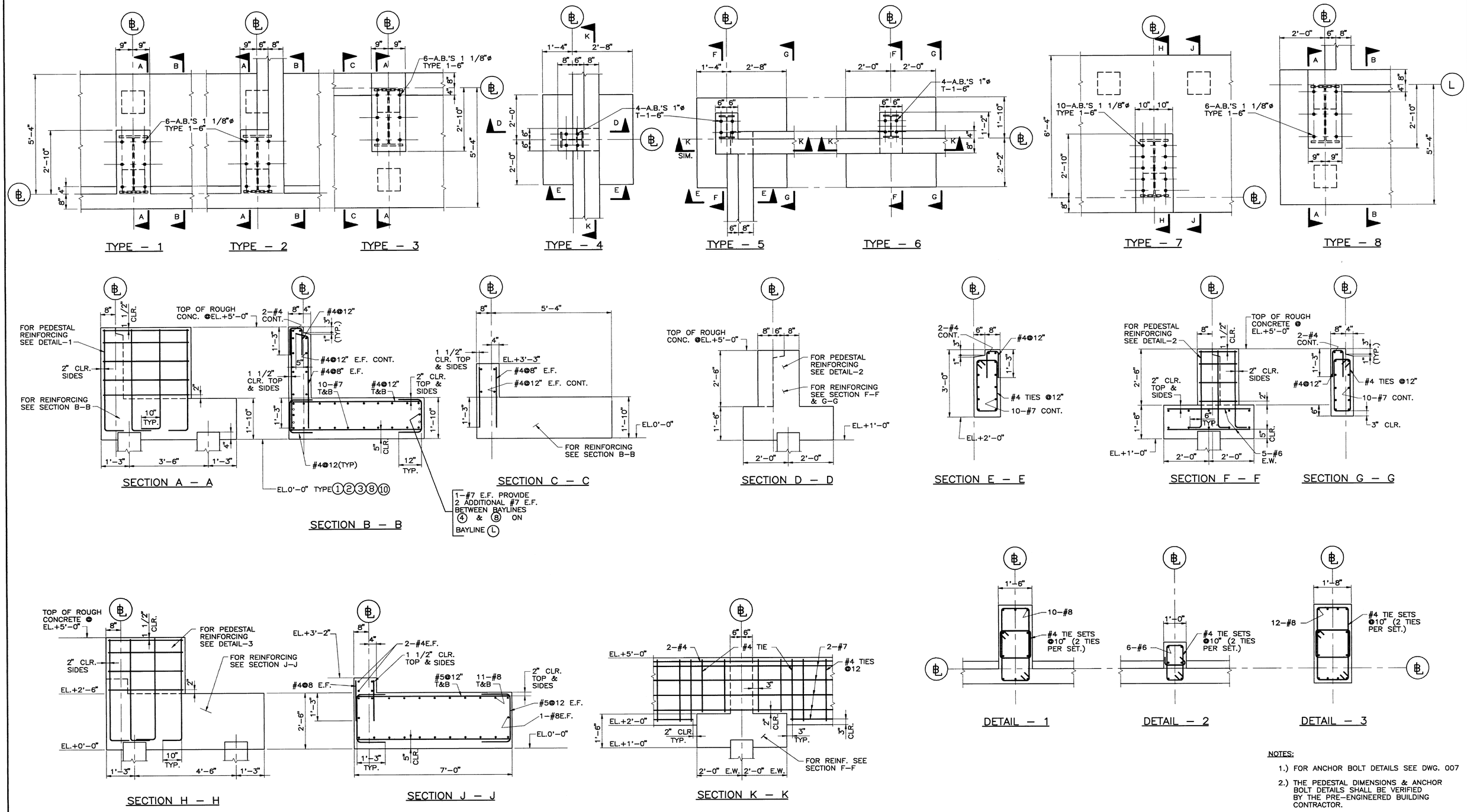

NOTES:

1.) FOR ANCHOR BOLT DETAILS SEE DWG. 007

2.) THE PEDESTAL DIMENSIONS & ANCHOR BOLT DETAILS SHALL BE VERIFIED BY THE PRE–ENGINEERED BUILDING CONTRACTOR.

No.	DATE	BY	REVISION
E	9/4	RWC	BID PURPOSES
E	8/24	RWC	REVISED GRADE BEAMS
D	8/14	RWC	REVISED FOOTINGS & REINF.
C	7/21	RWC	OWNER REVIEW
B	7/17	RWC	FOR COMPACTOR ADDITION
A	7/1/92	RWC	FOR OWNER REVIEW

JOB No.	DESIGNED:	PROJECT ENGINEER:
78783	DHP	RWC
SCALE:	DRAWN BY:	APPROVED BY:
1/2"=1'–0"	PCF	
	CHECKED BY:	DATE:

URS CONSULTANTS

WESTERN REGION
500 N.E. MULTNOMAH
PORTLAND OREGON
97232

CITY OF SUNNYVALE CALIFORNIA

CITY OF SUNNYVALE
CALIFORNIA
PR-92-15

SMaRT STATION
STRUCTURAL
FOUNDATIONS–SECTIONS & DETAILS SH.1

SHEET 28/74

DRAWING NUMBER: 202

ISSUE E

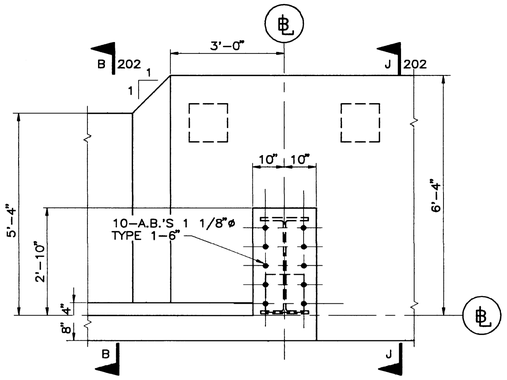

TYPE – 9
1/2"=1'-0"

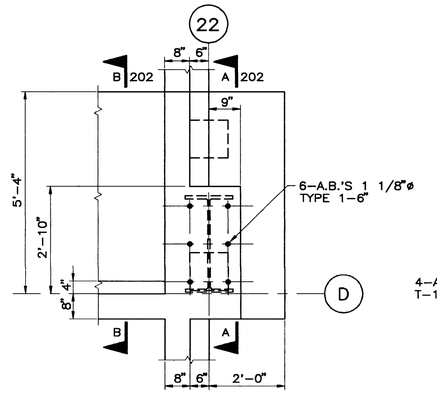

TYPE – 10
1/2"=1'-0"

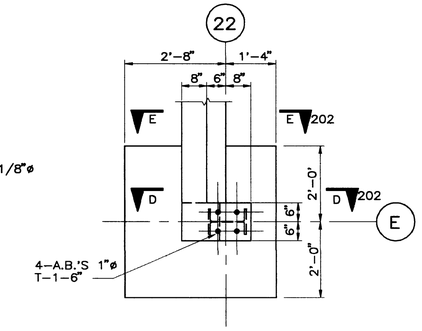

TYPE – 11
1/2"=1'-0"

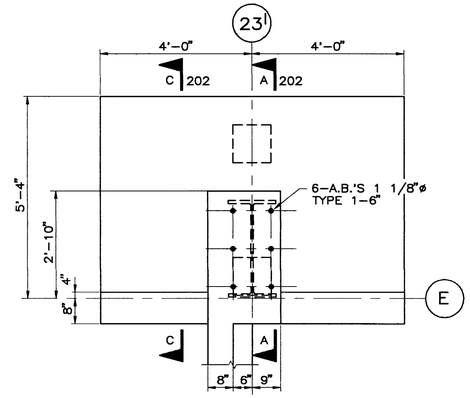

TYPE – 12
1/2"=1'-0"

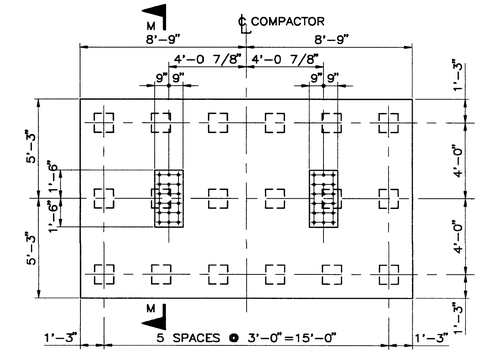

TYPE – 13
1/4"=1'-0"

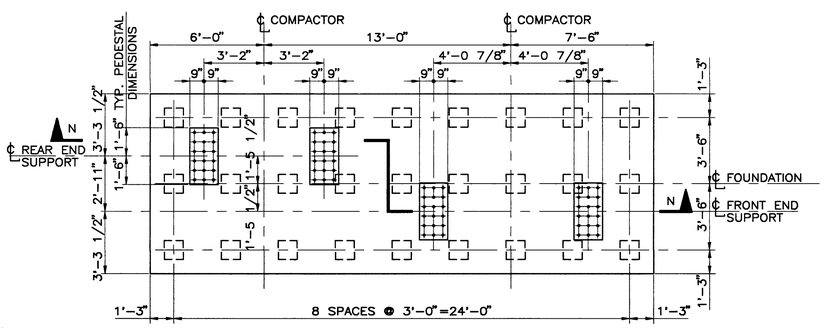

TYPE – 14
1/4"=1'-0"

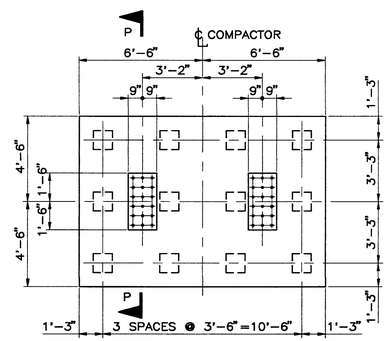

TYPE – 15
1/4"=1'-0"

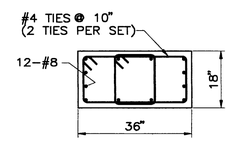

DETAIL – 4
1/2"=1'-0"

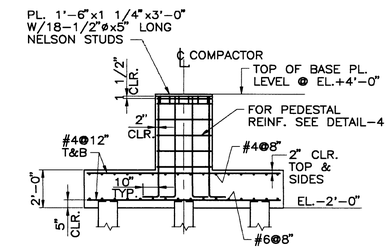

SECTION M – M
1/4"=1'-0"

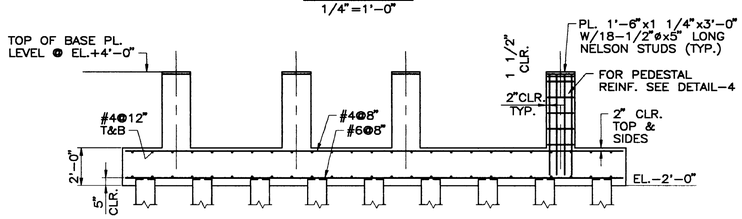

SECTION N – N
1/4"=1'-0"

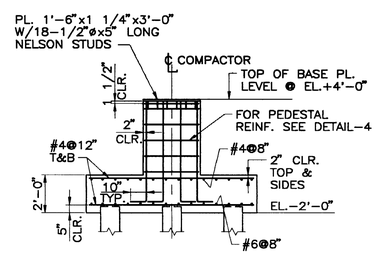

SECTION P – P
1/4"=1'-0"

No.	DATE	BY	REVISION
C	9/4	RWC	BID PURPOSES
C	8/14	RWC	ISSUED FOR PILING BID PURPOSES
C	7/21	RWC	OWNER REVIEW
B	7/17	RWC	FOR COMPACTOR ADDITION
A	7/1	RWC	FOR OWNER REVIEW

JOB No. 78783	DESIGNED: DHP	PROJECT ENGINEER: RWC	
SCALE: 1/4"=1'-0" UNLESS NOTED	DRAWN BY: PCF	APPROVED BY:	
	CHECKED BY:	DATE:	

URS CONSULTANTS

WESTERN REGION
500 N.E. MULTNOMAH
PORTLAND OREGON
97232

CITY OF SUNNYVALE CALIFORNIA

CITY OF SUNNYVALE
CALIFORNIA
PR-92-15

SMaRT STATION
STRUCTURAL
FOUNDATIONS–SECT'S & DETAILS–SH.2

DRAWING NUMBER: 203

SHEET 29/74

ISSUE C

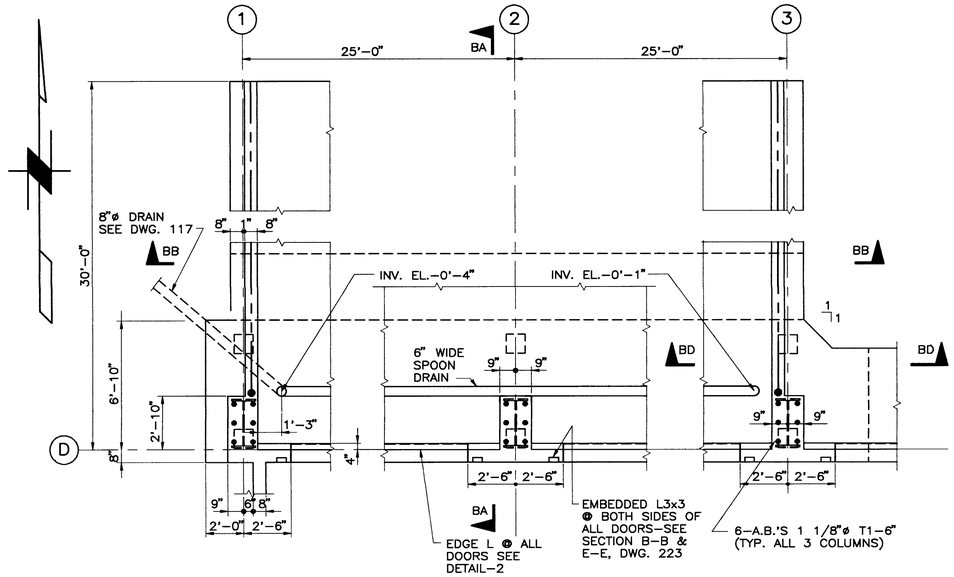

PLAN

DETAIL – 1

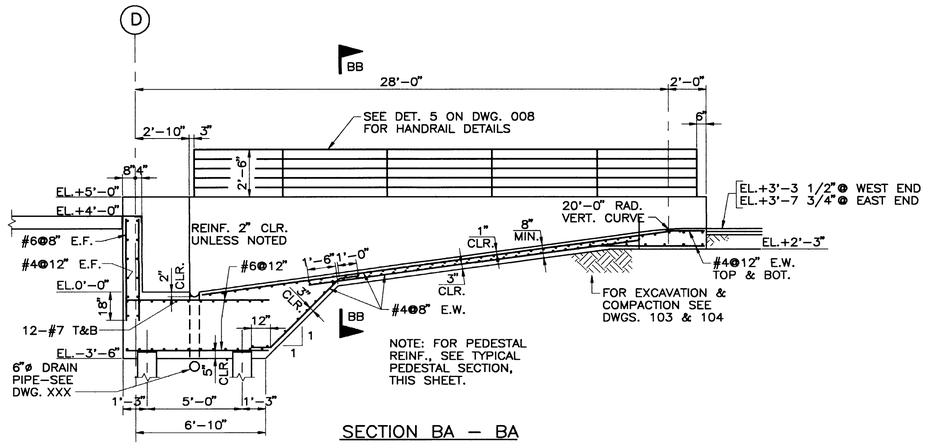

SECTION BA – BA

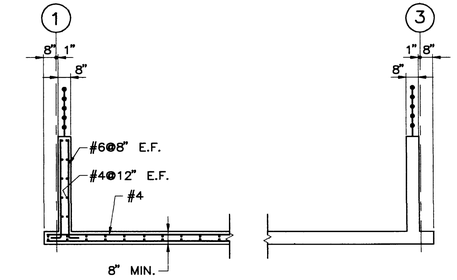

SECTION BB – BB

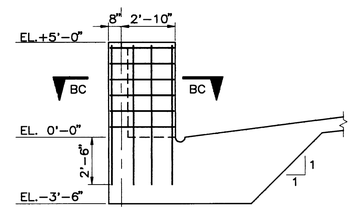

TYPICAL PEDESTAL SECTION

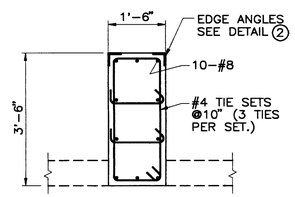

SECTION BC – BC

1/2"=1'-0"

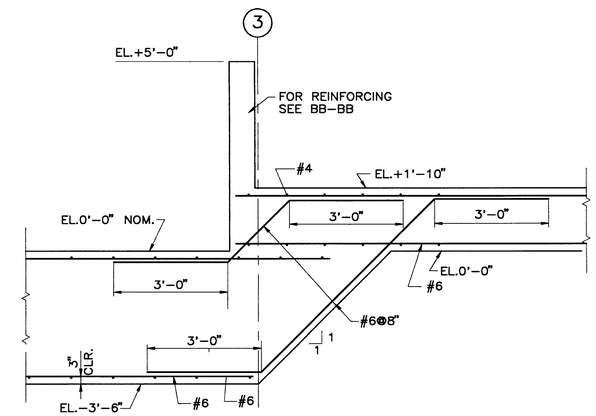

SECTION BD – BD

1/2" = 1'-0"

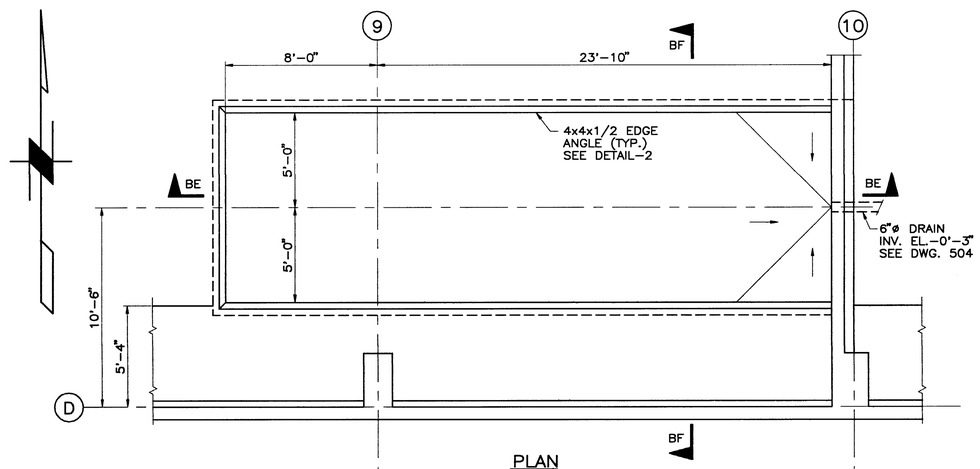

PLAN

(YARD & WOOD WASTE IN-FLOOR CONV. PIT)

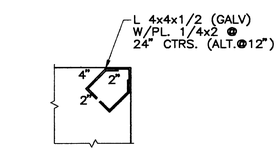

DETAIL – 2

1"=1'-0"

TYPICAL @ ALL DOORS
ON OUTSIDE EDGE

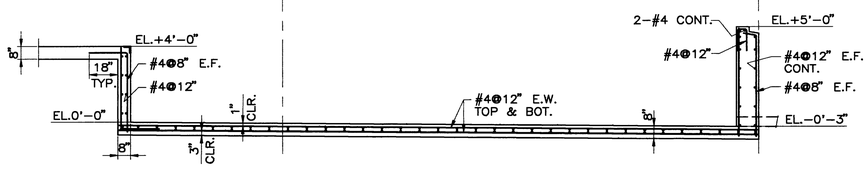

SECTION BE – BE

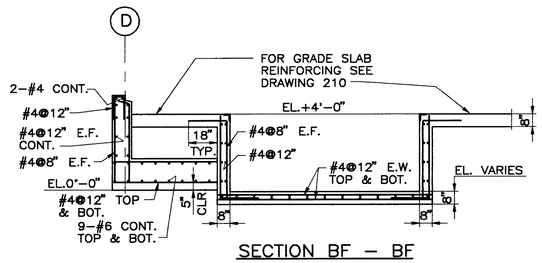

SECTION BF – BF

NOTES:

1.) SEE NOTES 1. & 2. ON DRAWING 202.

No.	DATE	BY	REVISION
D	9/14	RWC	SECTS BA-BA & BE-BE REV.D- FOR BID PURPOSES
C	9/4	RWC	BID PURPOSES
C	8/21	RWC	FOR OWNER REVIEW
C	8/14	RWC	FOOTING & REINF. REVISED
B	7/17,21	RWC	FOR COMPACTOR ADDITION
A	7/1	RWC	ISSUED FOR OWNER REVIEW

JOB No. 78783	DESIGNED: DHP	PROJECT ENGINEER: RWC	
SCALE: 1/4"=1'-0" UNLESS NOTED	DRAWN BY: RD/PF	APPROVED BY:	
	CHECKED BY:	DATE:	

URS CONSULTANTS

WESTERN REGION
500 N.E. MULTNOMAH
PORTLAND OREGON
97232

CITY OF SUNNYVALE CALIFORNIA

CITY OF SUNNYVALE
CALIFORNIA
PR-92-15

SMaRT STATION
STRUCTURAL
FOUNDATIONS-SECT'S & DETAILS-SHT. 3

DRAWING NUMBER: 204

SHEET 30/74

ISSUE D

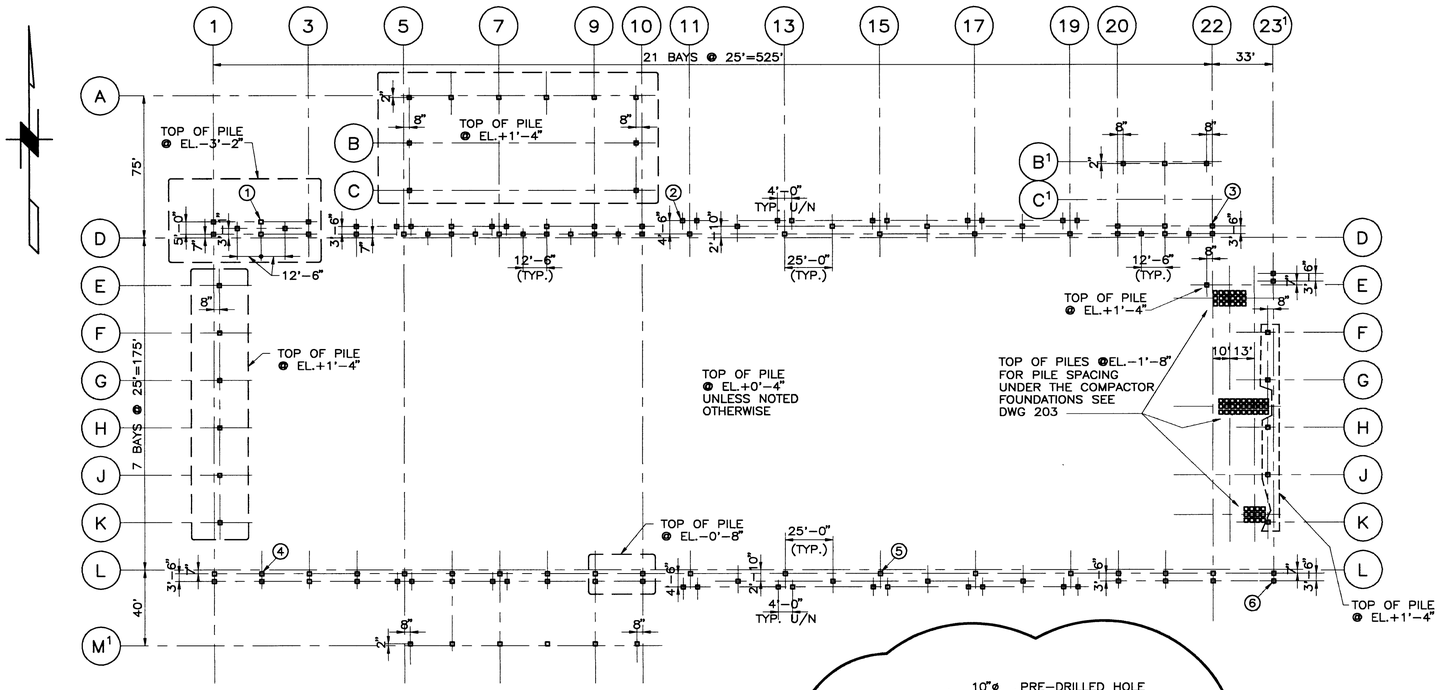

PLAN
1"=40'

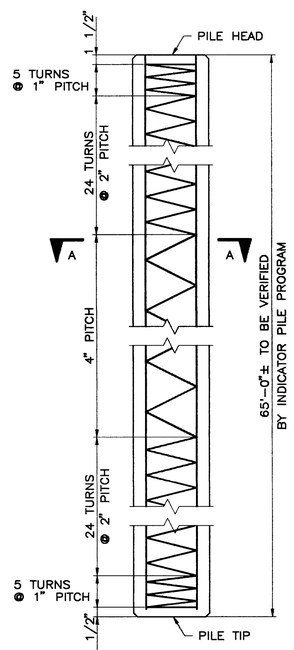

DETAIL – 1
1"=10'

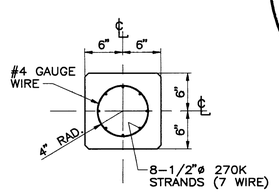

SECTION A – A
1"=10'

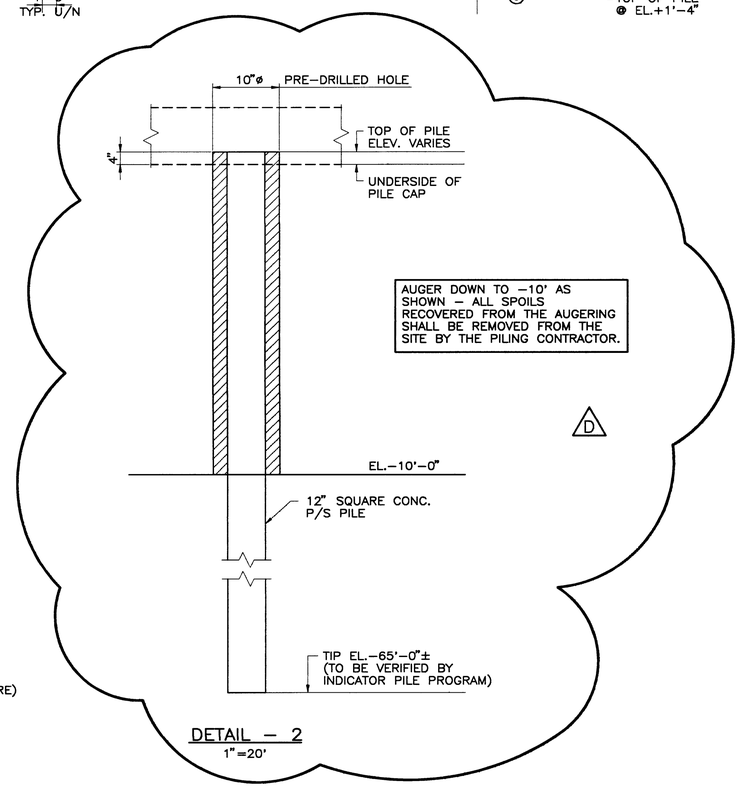

DETAIL – 2
1"=20'

NOTES:

1. ALL PILING SHALL BE 12" SQUARE PRESTRESSED PER DETAIL-1.
2. (1)-DENOTES AN INDICATOR PILE. 6 INDICATOR PILES SHALL BE DRIVEN AT THE LOCATIONS INDICATED USING A PILE DRIVING ANALYZER, (SUPPLIED BY CONTRACTOR). BASED ON THE RESULTS OF THESE INDICATOR PILES, THE REMAINING PILES CAN BE ORDERED AND PLACED.
3. THE DRIVING PROCEDURE FOR THE PILING SHALL BE PER DETAIL-2.
4. LOCATION OF PILE PICK-UP POINTS SHALL BE ESTABLISHED BY THE PILING SUPPLIER.
5. IF AUGER HOLE IS OVERSIZED, DUE TO FIELD CONDITIONS, AREA AROUND PILE SHALL BE FILLED WITH A CEMENT SLURRY AS PER CALTRANS SPECS.

No.	DATE	BY	REVISION
D	9/4	RWC	REVISED DETAIL 2 AND NOTES FOR ADDENDUM #1, & FOR CONTRACT #PR-92-15 REFERENCE.
C	8/17	RWC	FOR PILING BID PURPOSES
B	7/21	RWC	FOR COMPACTOR ADDITION / OWNER REVIEW
A	7/1	RWC	FOR OWNERS REVIEW

JOB No. 78783	DESIGNED: DHP	PROJECT ENGINEER: RWC	
SCALE: 1"=40' UNLESS NOTED	DRAWN BY: PCF	APPROVED BY:	
	CHECKED BY:	DATE:	

URS CONSULTANTS

WESTERN REGION
500 N.E. MULTNOMAH
PORTLAND OREGON
97232

CITY OF SUNNYVALE CALIFORNIA

CITY OF SUNNYVALE
CALIFORNIA
PR-92-15
AND PR-92-14

SMaRT STATION
STRUCTURAL
PILE PLAN AND DETAILS

DRAWING NUMBER: 205

SHEET 31/74

ISSUE D

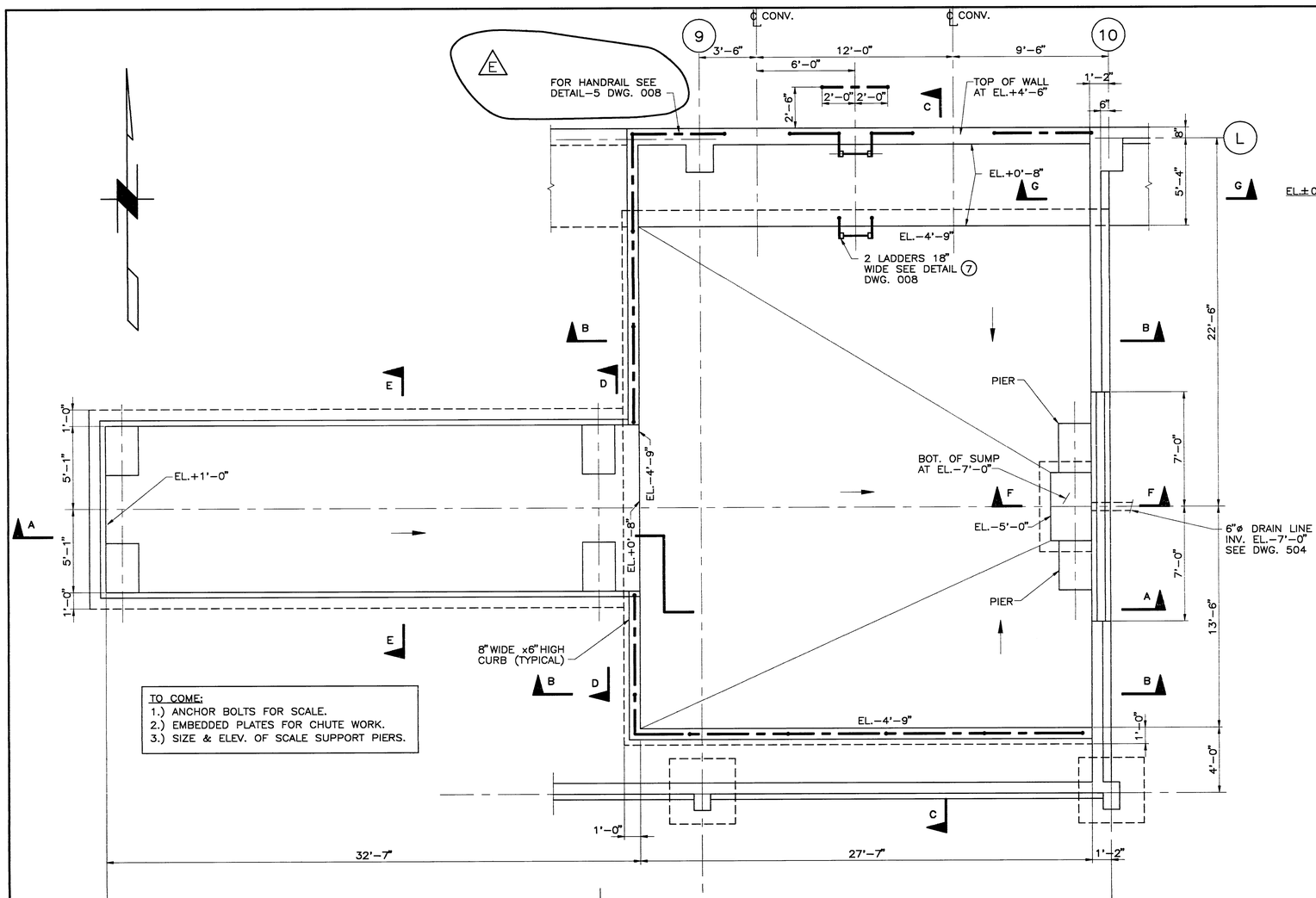

TO COME:
1.) ANCHOR BOLTS FOR SCALE.
2.) EMBEDDED PLATES FOR CHUTE WORK.
3.) SIZE & ELEV. OF SCALE SUPPORT PIERS.

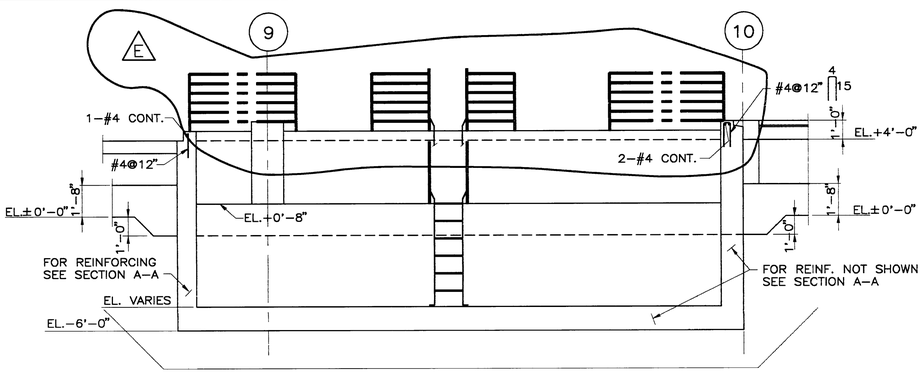

SECTION B – B

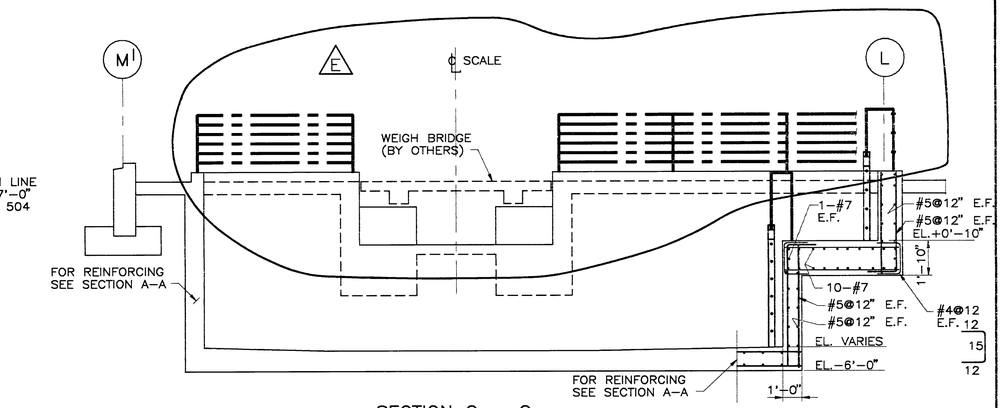

SECTION C – C

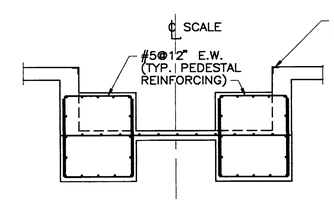

SECTION D – D

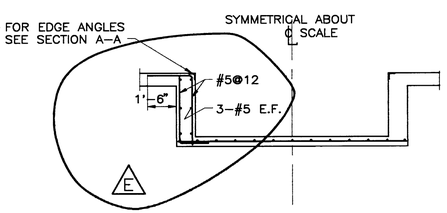

SECTION E – E

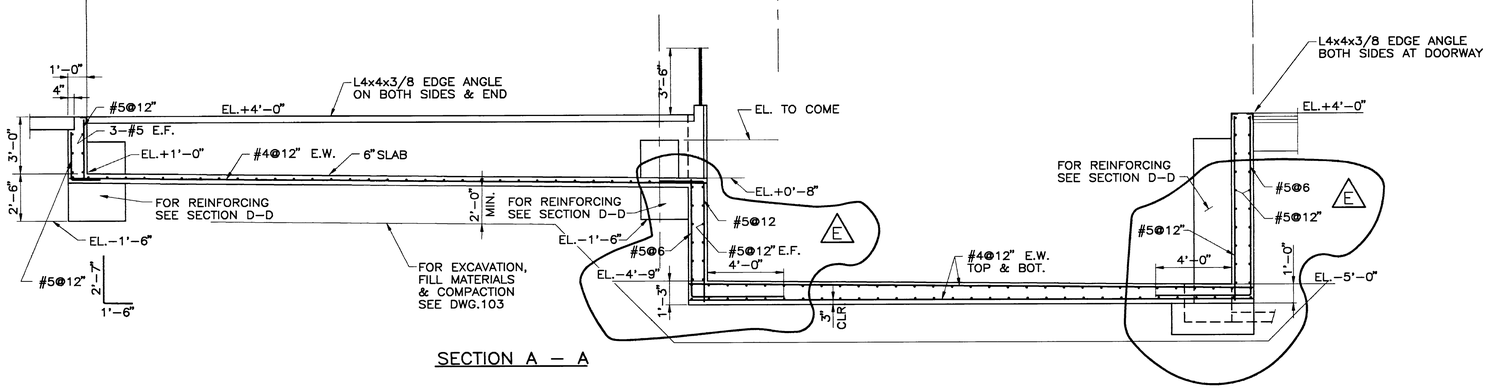

SECTION A – A

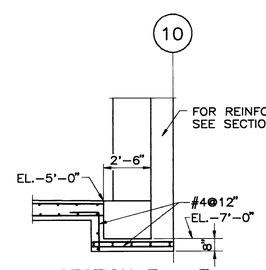

SECTION F – F

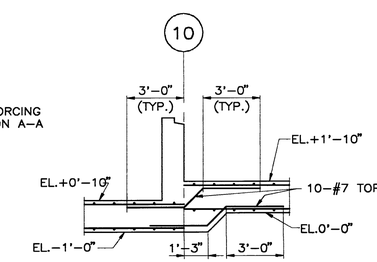

SECTION G – G

NOTES:
1.) FOR STANDARD GRADE SLAB REINF. SEE DWG. 210

4 0 4 8
SCALE IN FEET

No.	DATE	BY	REVISION
E	10/5	RWC	ISSUED FOR ADDENDA #1
D	9/4	RWC	BID PURPOSES
D	8/24	RWC	REVISED REINFORCING
C	8/21	RWC	REINF. REV'D. / OWNER REVIEW
C	8/14	RWC	REINF. REVISED
B	7/21	RWC	OWNER REVIEW
A	7/1	RWC	OWNER REVIEW

JOB No. 78783	DESIGNED: RWC, VCH	PROJECT ENGINEER: RWC	
SCALE: 1/4"=1'-0"	DRAWN BY: VCH	APPROVED BY:	
	CHECKED BY: DHP	DATE:	

URS CONSULTANTS

WESTERN REGION
500 N.E. MULTNOMAH
PORTLAND OREGON
97232

CITY OF SUNNYVALE CALIFORNIA

CITY OF SUNNYVALE
CALIFORNIA

SMaRT STATION
FOUNDATIONS
CURBSIDE UNLOADING PIT

DRAWING NUMBER: 206

SHEET 32/74

ISSUE E

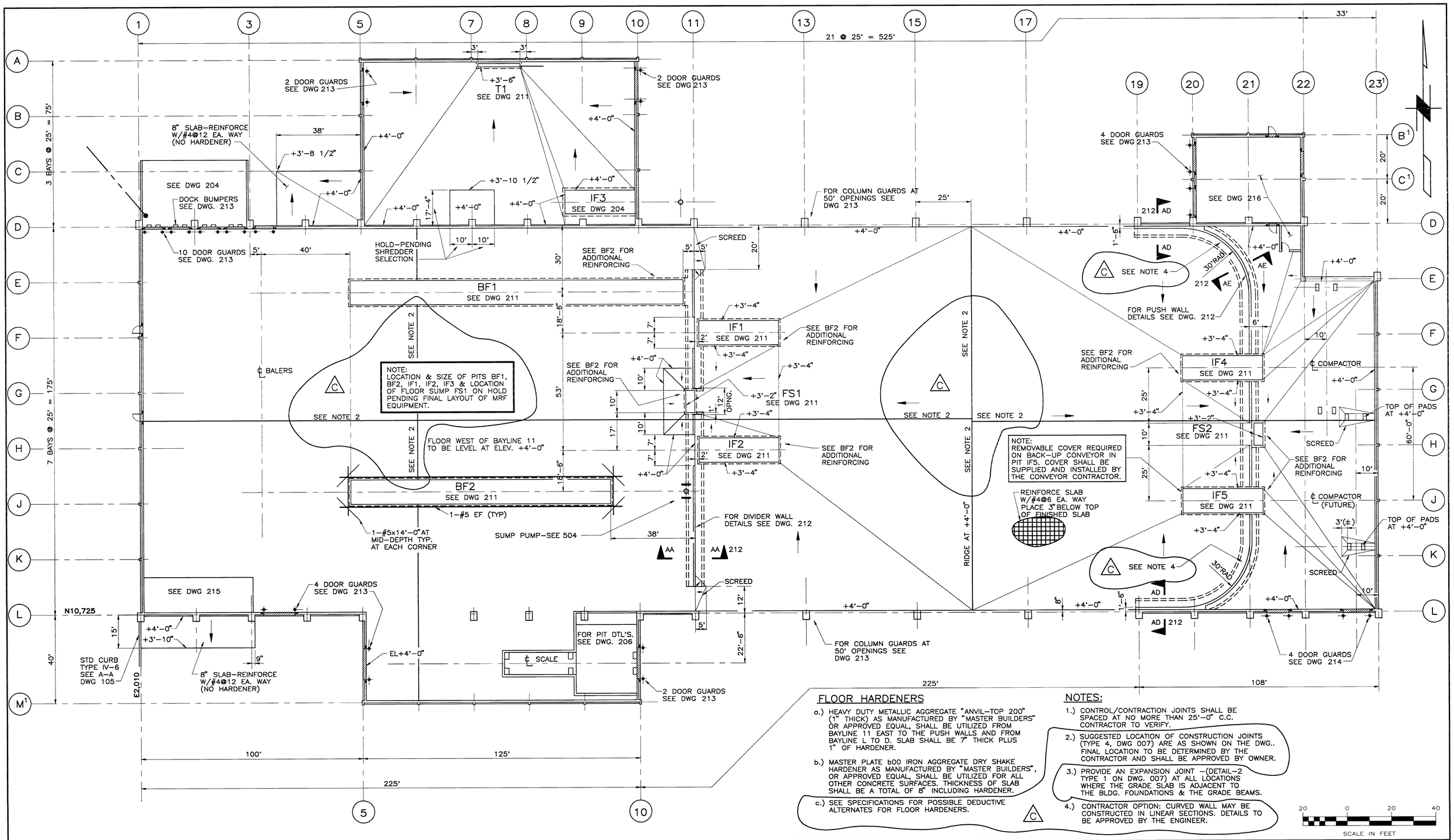

FLOOR HARDENERS

a.) HEAVY DUTY METALLIC AGGREGATE "ANVIL-TOP 200" (1" THICK) AS MANUFACTURED BY "MASTER BUILDERS" OR APPROVED EQUAL, SHALL BE UTILIZED FROM BAYLINE 11 EAST TO THE PUSH WALLS AND FROM BAYLINE L TO D. SLAB SHALL BE 7" THICK PLUS 1" OF HARDENER.

b.) MASTER PLATE b00 IRON AGGREGATE DRY SHAKE HARDENER AS MANUFACTURED BY "MASTER BUILDERS", OR APPROVED EQUAL, SHALL BE UTILIZED FOR ALL OTHER CONCRETE SURFACES. THICKNESS OF SLAB SHALL BE A TOTAL OF 8" INCLUDING HARDENER.

c.) SEE SPECIFICATIONS FOR POSSIBLE DEDUCTIVE ALTERNATES FOR FLOOR HARDENERS.

C

NOTES:

1.) CONTROL/CONTRACTION JOINTS SHALL BE SPACED AT NO MORE THAN 25'-0" C.C. CONTRACTOR TO VERIFY.

2.) SUGGESTED LOCATION OF CONSTRUCTION JOINTS (TYPE 4, DWG 007) ARE AS SHOWN ON THE DWG.. FINAL LOCATION TO BE DETERMINED BY THE CONTRACTOR AND SHALL BE APPROVED BY OWNER.

3.) PROVIDE AN EXPANSION JOINT -(DETAIL-2 TYPE 1 ON DWG. 007) AT ALL LOCATIONS WHERE THE GRADE SLAB IS ADJACENT TO THE BLDG. FOUNDATIONS & THE GRADE BEAMS.

4.) CONTRACTOR OPTION: CURVED WALL MAY BE CONSTRUCTED IN LINEAR SECTIONS. DETAILS TO BE APPROVED BY THE ENGINEER.

C

20 0 20 40
SCALE IN FEET

No.	DATE	BY	REVISION
C	10/5	RWC	ISSUED FOR ADDENDA #1
B	9/14	RWC	REINF. REV.D & NOTE 3 ADDED- FOR BID PURPOSES
A	9/4	RWC	BID PURPOSES
A	8/21	RWC	FOR OWNERS REVIEW

JOB No. 78783	DESIGNED:	PROJECT ENGINEER: RWC
SCALE: 1" = 20'	DRAWN BY: HH/VH	APPROVED BY:
	CHECKED BY:	DATE:

URS CONSULTANTS

WESTERN REGION
500 N.E. MULTNOMAH
PORTLAND OREGON
97232

CITY OF SUNNYVALE CALIFORNIA

CITY OF SUNNYVALE
CALIFORNIA

SMaRT STATION
STRUCTURAL
GROUND FLOOR - CONCRETE OUTLINE

DRAWING NUMBER: 210

SHEET 33 / 74

ISSUE C

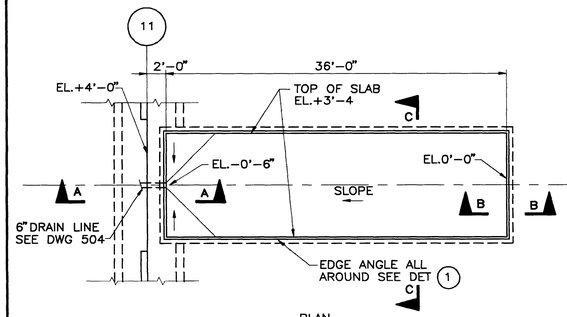

PLAN

CONV. PITS IF1 & IF2

1/8"=1'-0"

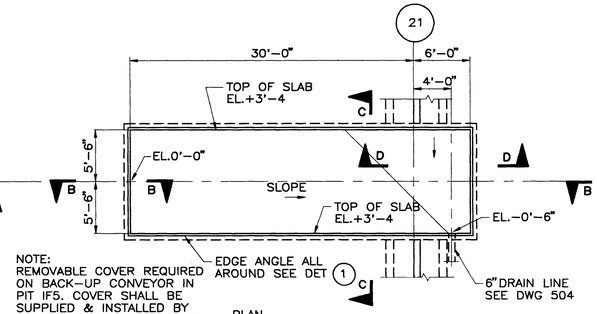

NOTE:
REMOVABLE COVER REQUIRED ON BACK-UP CONVEYOR IN PIT IF5. COVER SHALL BE SUPPLIED & INSTALLED BY THE CONVEYOR CONTRACTOR.

PLAN

CONV. PITS IF4 & IF5 — IF4 AS DRAWN & NOTED, IF5 OPP HAND & NOTED

1/8"=1'-0"

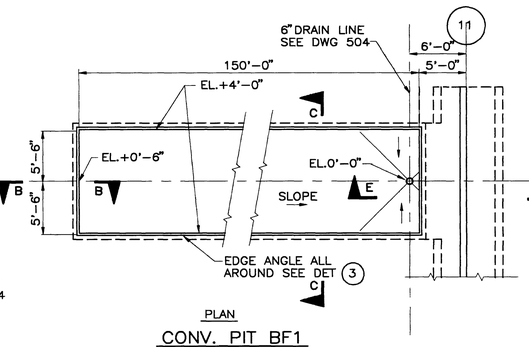

PLAN

CONV. PIT BF1

1/8"=1'-0"

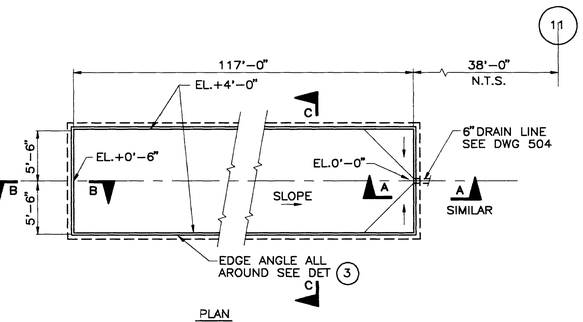

PLAN

CONV. PIT BF2

1/8"=1'-0"

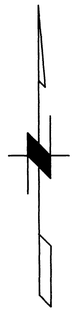

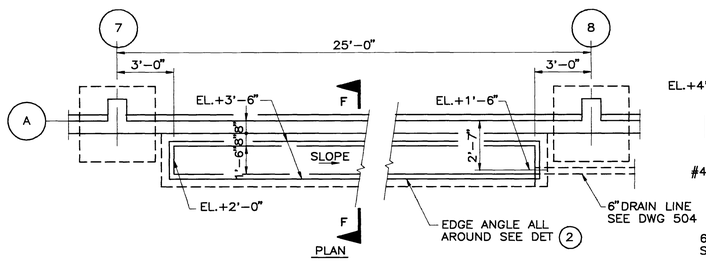

PLAN

TRENCH T1

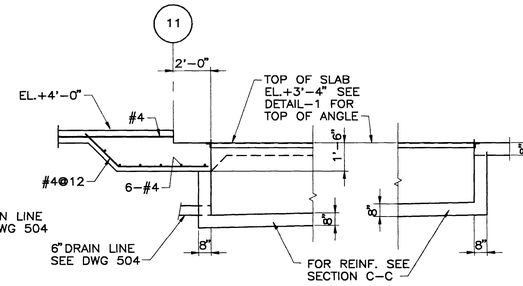

SECTION A – A

SECTION B – B

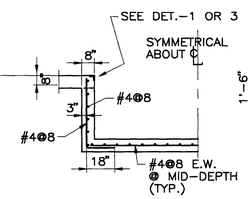

SECTION C – C

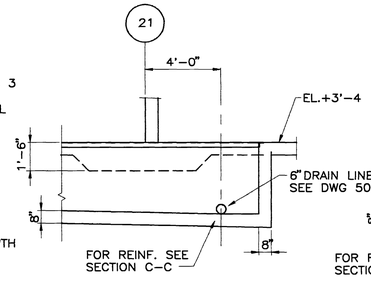

SECTION D – D

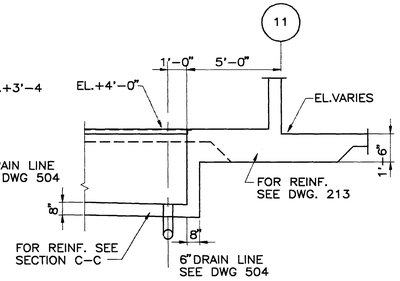

SECTION E – E

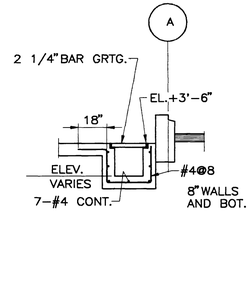

SECTION F – F

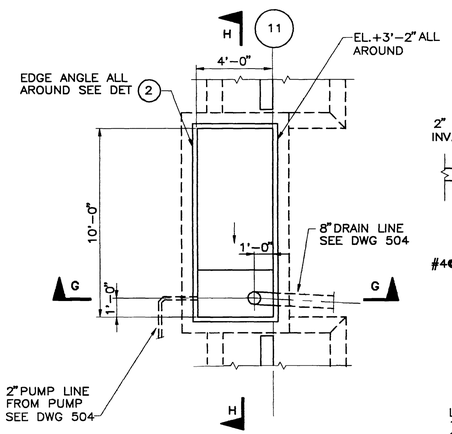

PLAN

FLOOR SUMP FS1

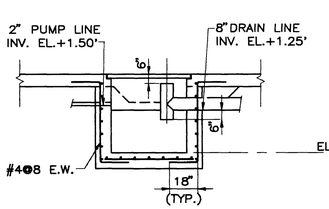

SECTION G – G

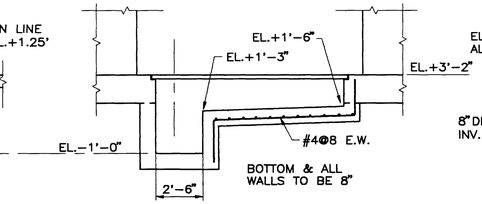

SECTION H – H

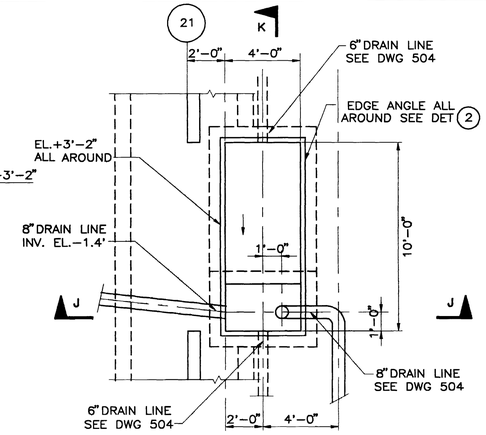

PLAN

FLOOR SUMP FS2

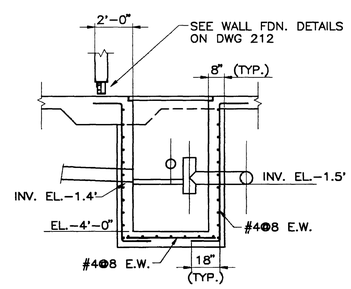

SECTION J – J

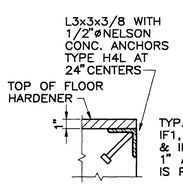

DETAIL – 1

1 1/2"=1'-0"

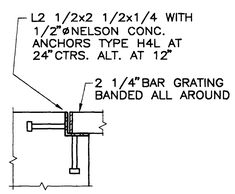

DETAIL – 2

1 1/2"=1'-0"

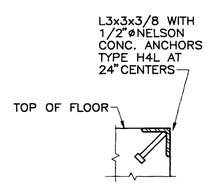

DETAIL – 3

1 1/2"=1'-0"

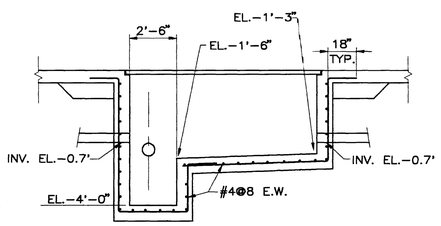

SECTION K – K

NOTES:

1.) THE EDGE ANGLES OF CONVEYOR PITS IF1, IF2, IF4 & IF5 IN THE "ANVIL-TOP" AREA SHALL BE SET 1" LOWER TO ALLOW THE "ANVIL-TOP" TO COVER.

2.) TRENCH T1, AND SUMPS FS1 & FS2 SHALL BE COVERED WITH GALVANIZED STEEL GRATING 2 1/4x3/16 BEARING BARS @ 1 3/16" C.C.

4 0 4 8
SCALE IN FEET

No.	DATE	BY	REVISION
B	9/14	RWC	DET. 3 ADDED – BID PURPOSES
A	9/4	RWC	BID PURPOSES
A	8/21	RWC	FOR OWNER REVIEW

JOB No. 78783	DESIGNED:	PROJECT ENGINEER: RWC
SCALE: 1/4"=1'-0" UNLESS NOTED OTHERWISE	DRAWN BY: VCH	APPROVED BY:
	CHECKED BY:	DATE:

URS CONSULTANTS

WESTERN REGION
500 N.E. MULTNOMAH
PORTLAND OREGON
97232

CITY OF SUNNYVALE CALIFORNIA

CITY OF SUNNYVALE
CALIFORNIA
PR-92-15

SMaRT STATION
STRUCTURAL
GROUND FLOOR – PITS & TRENCH

DRAWING NUMBER: 211

SHEET 34/74

ISSUE C

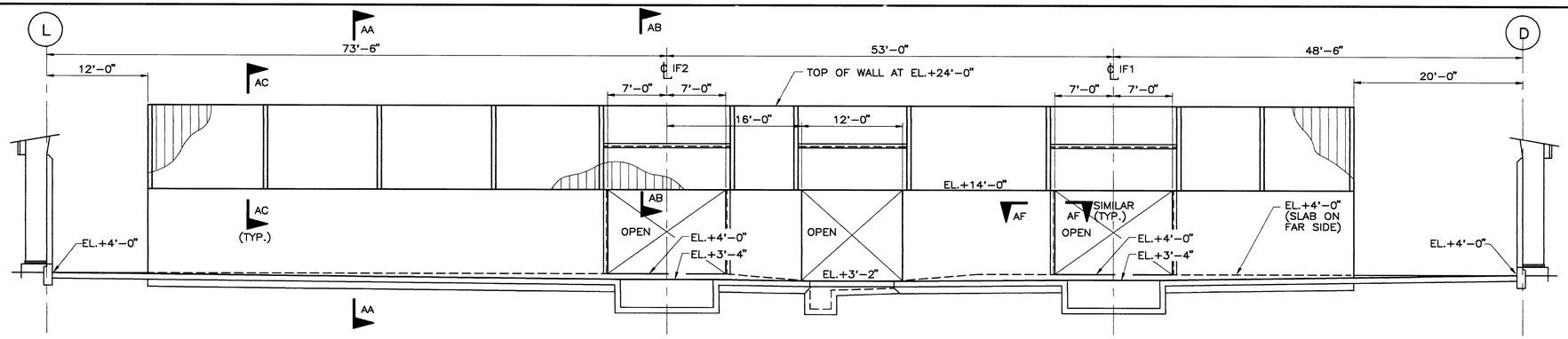

ELEVATION OF DIVIDER WALL (LOOKING WEST)

1/8"=1'-0"

NOTE:LOCATION OF OPENINGS AND PITS ON HOLD PENDING FINAL LAYOUT OF MRF EQUIPMENT

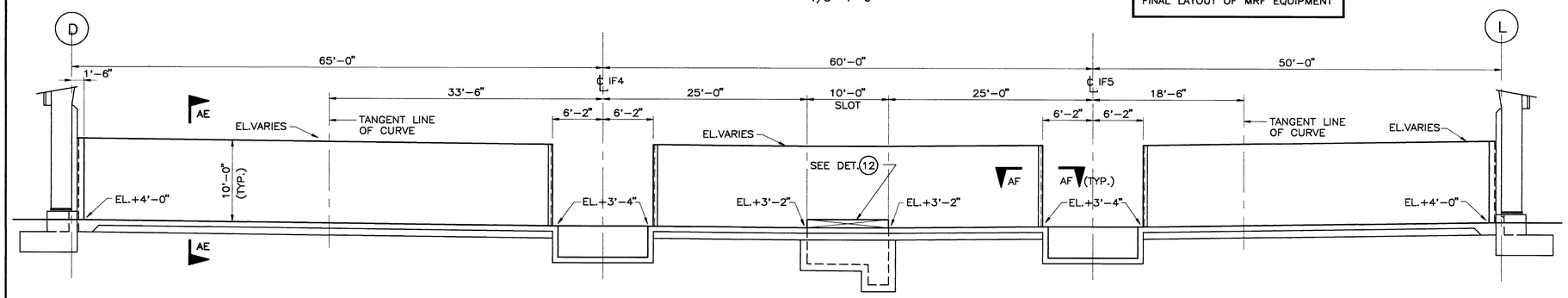

ELEVATION OF PUSH WALL (LOOKING EAST)

1/8"=1'-0"

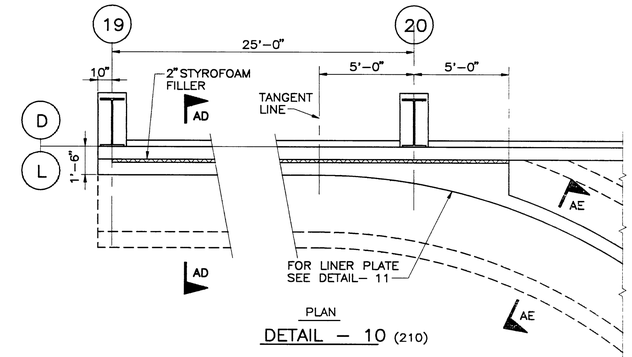

PLAN

DETAIL – 10 (210)

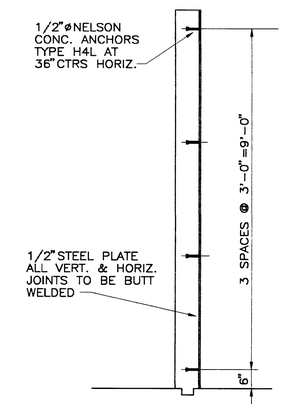

DETAIL – 11

1/2"=1'-0"

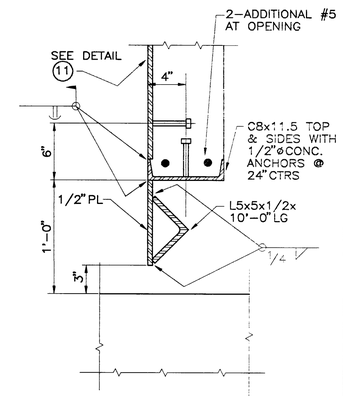

DETAIL – 12

1 1/2"=1'-0"

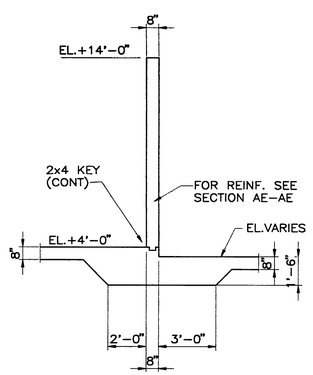

SECTION AA – AA (210)

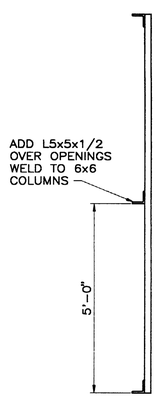

SECTION AB – AB

1/2"=1'-0"

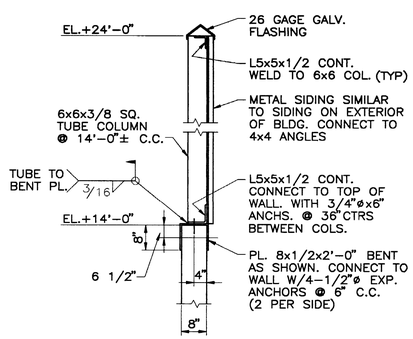

SECTION AC – AC

1/2"=1'-0"

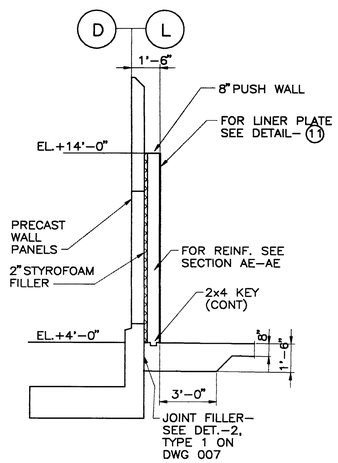

SECTION AD – AD (210)

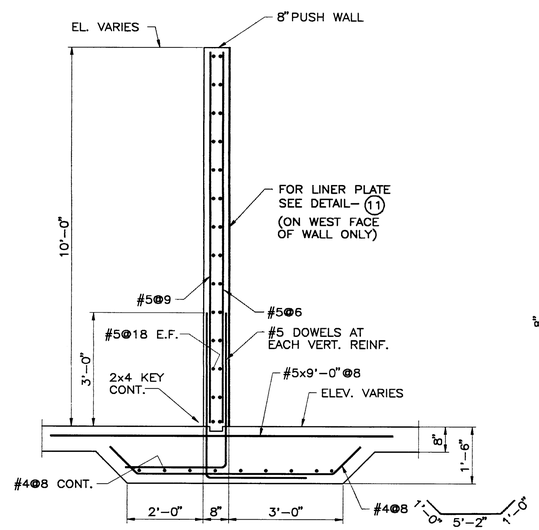

SECTION AE – AE (210)

1/2"=1'-0"

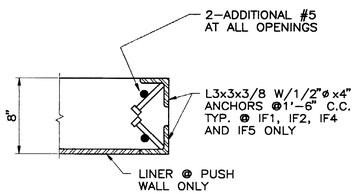

SECTION AF – AF

1 1/2"=1'-0"

4 0 4 8

SCALE IN FEET

No.	DATE	BY	REVISION
B	9/14	RWC	NOTE ADDED TO SECT. AD-AD- BID PURPOSES
A	9/4	RWC	BID PURPOSES
A	8/21	RWC	FOR OWNER REVIEW

JOB No. 78783	DESIGNED:	PROJECT ENGINEER: RWC
SCALE: 1/4"=1'-0" UNLESS NOTED OTHERWISE	DRAWN BY: VCH	APPROVED BY:
	CHECKED BY:	DATE:

URS CONSULTANTS

WESTERN REGION

500 N.E. MULTNOMAH
PORTLAND OREGON
97232

CITY OF SUNNYVALE CALIFORNIA

CITY OF SUNNYVALE
CALIFORNIA
PR-92-15

SMaRT STATION
STRUCTURAL
GROUND FLOOR – WALL DETAILS

SHEET 35/74

DRAWING NUMBER: 212

ISSUE B

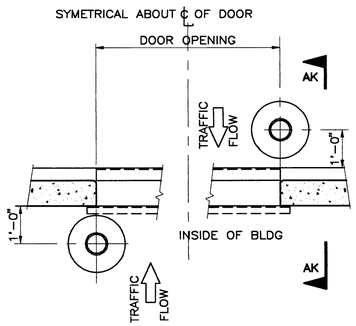

PLAN
DETAIL – 20
DOOR GUARDS FOR ROLL-UP DOORS

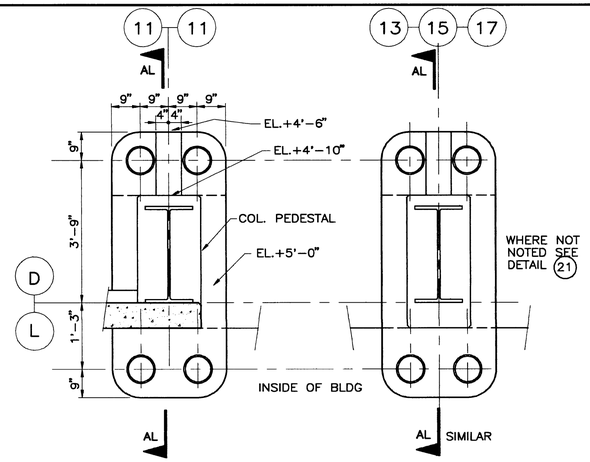

PLAN
DETAIL – 21

PLAN
DETAIL – 22

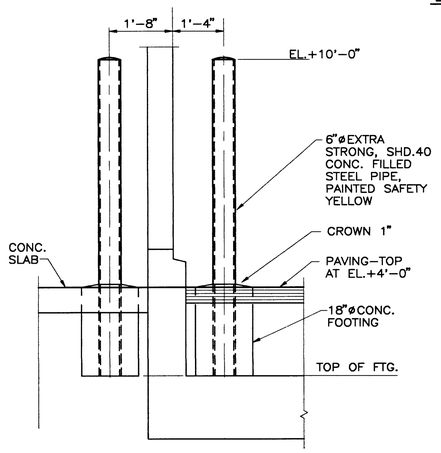

SECTION AK – AK

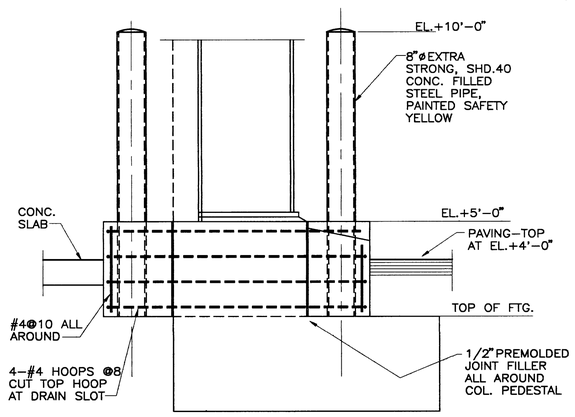

SECTION AL – AL

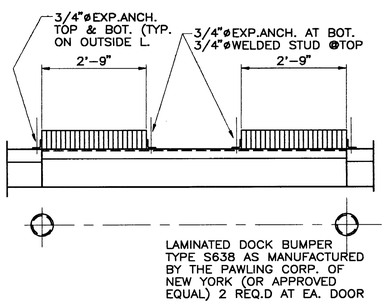

DETAIL – 23
DOCK BUMPERS REQD AT BALE LOAD-OUT DOORS
4 5 6 & 7

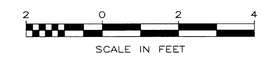

No.	DATE	BY	REVISION
A	9/4	RWC	BID PURPOSES
A	8/21	RWC	OWNER REVIEW

JOB No. 78783	DESIGNED:	PROJECT ENGINEER: RWC
SCALE: 1/2"=1'-0"	DRAWN BY: VCH	APPROVED BY:
	CHECKED BY:	DATE:

URS CONSULTANTS

WESTERN REGION
500 N.E. MULTNOMAH
PORTLAND OREGON
97232

CITY OF SUNNYVALE CALIFORNIA
CITY OF SUNNYVALE
CALIFORNIA
PR-92-15

SMaRT STATION
STRUCTURAL
MISCELLANEOUS DETAILS

DRAWING NUMBER: 213

SHEET 36/74

ISSUE A

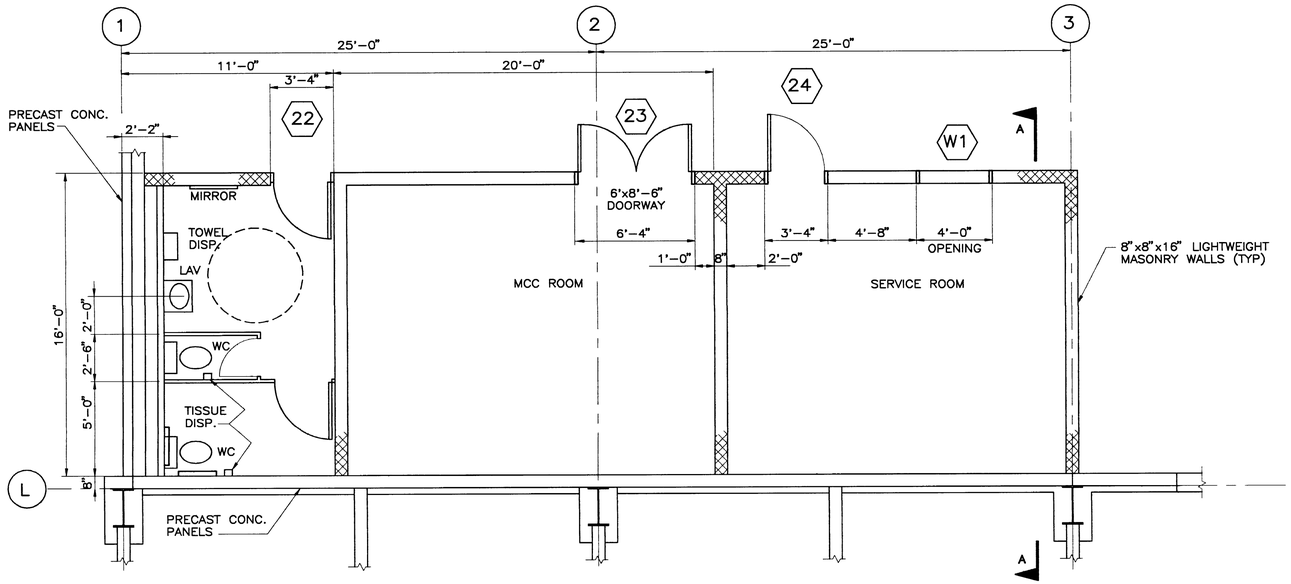

PLAN

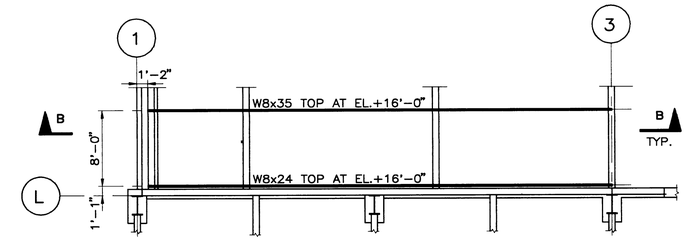

PLAN – STEEL FRAMING

1/8"=1'-0"

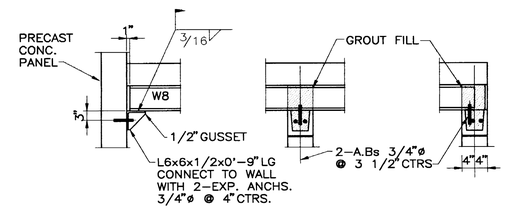

SECTION B – B

1/2"=1'-0"

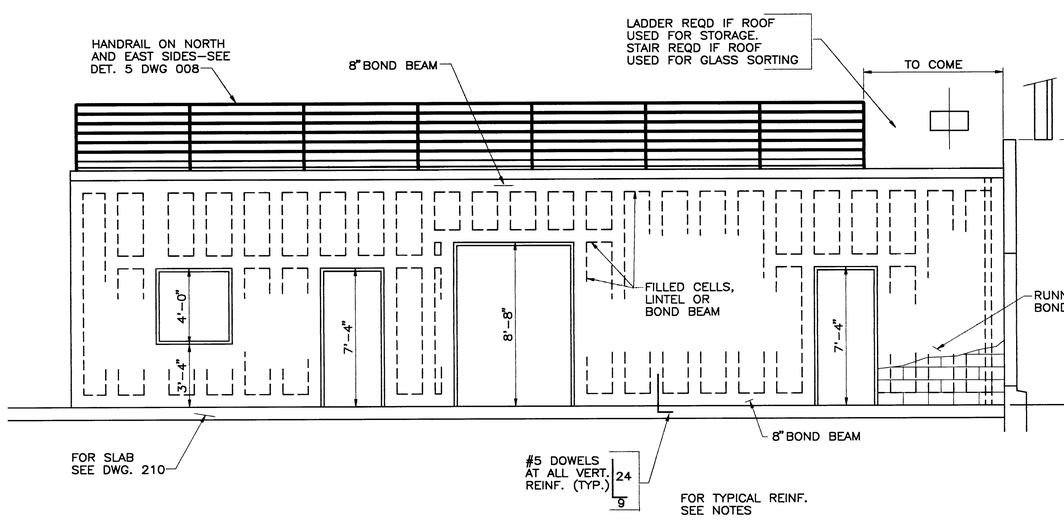

NORTH WALL ELEVATION

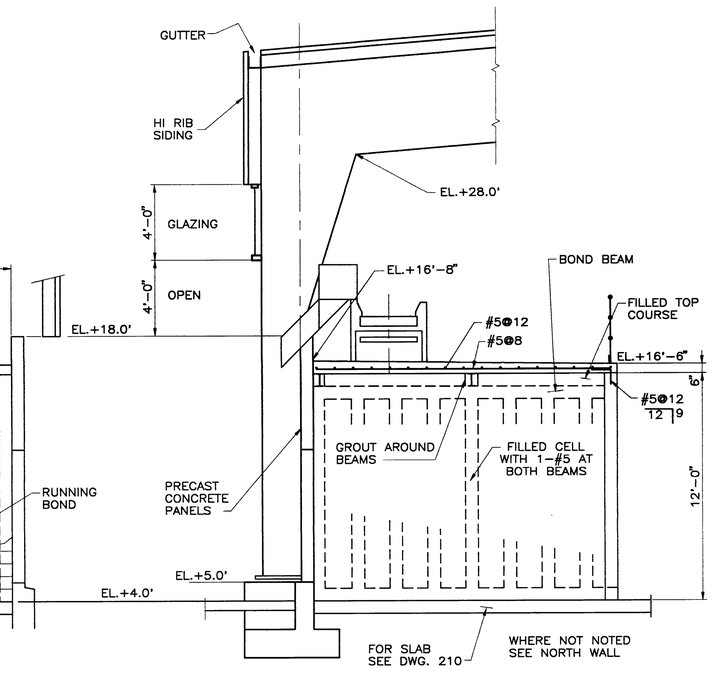

SECTION A – A

NOTES:

1. MASONRY WALLS SHALL BE LIGHTWEIGHT CONCRETE MASONRY UNITS AND SHALL BE REINFORCED AS FOLLOWS;

- #5 @ 24" CTRS VERTICAL STEEL IN FILLED CELLS. 2-#5 AT ALL WALL INTERSECTIONS, END OF WALLS, AND BOTH SIDES OF ALL OPENINGS, IN FILLED CELLS.
- 8" BOND BEAMS WITH 2-#4 SHALL BE PROVIDED AT TOP & BOTTOM OF ALL WALLS AND AS NOTED ON THE DRAWING.
- PROVIDE 8" DEEP LINTELS OVER ALL OPENINGS, REINFORCED WITH 2-#4. LINTEL TO EXTEND 2'-0" EACH SIDE OF OPENING.
- PROVIDE HORIZONTAL K-WEB REINFORCING AT ALTERNATE COURSES.

No.	DATE	BY	REVISION
B	9/14	RWC	HANDRAIL REVISED- BID PURPOSES
A	9/4	RWC	BID PURPOSES
A	8/21	RWC	OWNER REVIEW

JOB No. 78783	DESIGNED:	PROJECT ENGINEER: RWC
SCALE: 1/4"=1'-0"	DRAWN BY: VCH	APPROVED BY:
	CHECKED BY:	DATE:

URS CONSULTANTS

WESTERN REGION
500 N.E. MULTNOMAH
PORTLAND OREGON
97232

CITY OF SUNNYVALE CALIFORNIA

CITY OF SUNNYVALE
CALIFORNIA
PR-92-15

SMaRT STATION
STRUCTURAL
MCC, WASHROOM & SERVICE ROOM

SHEET 37/74

DRAWING NUMBER: 215

ISSUE B

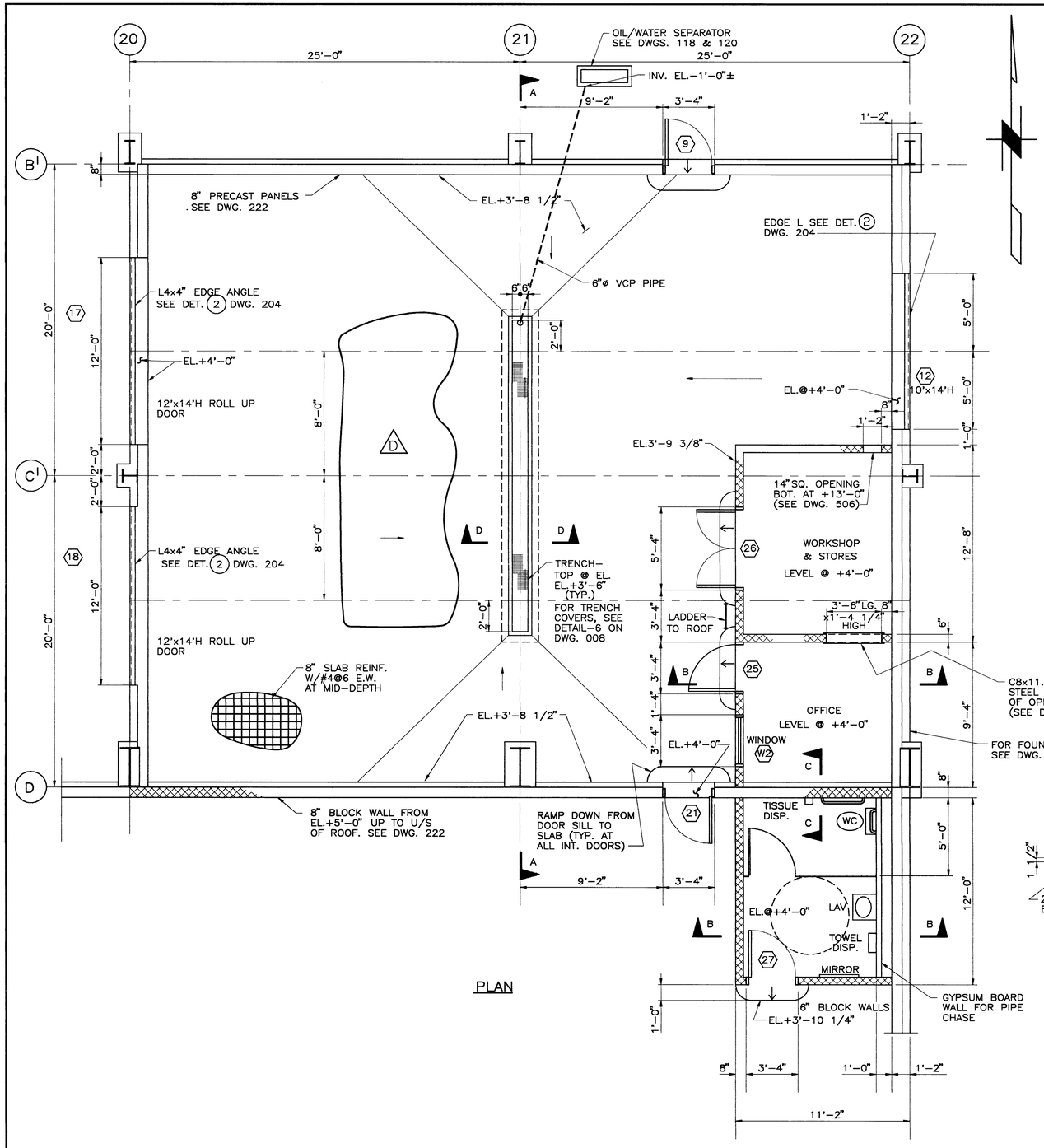

PLAN

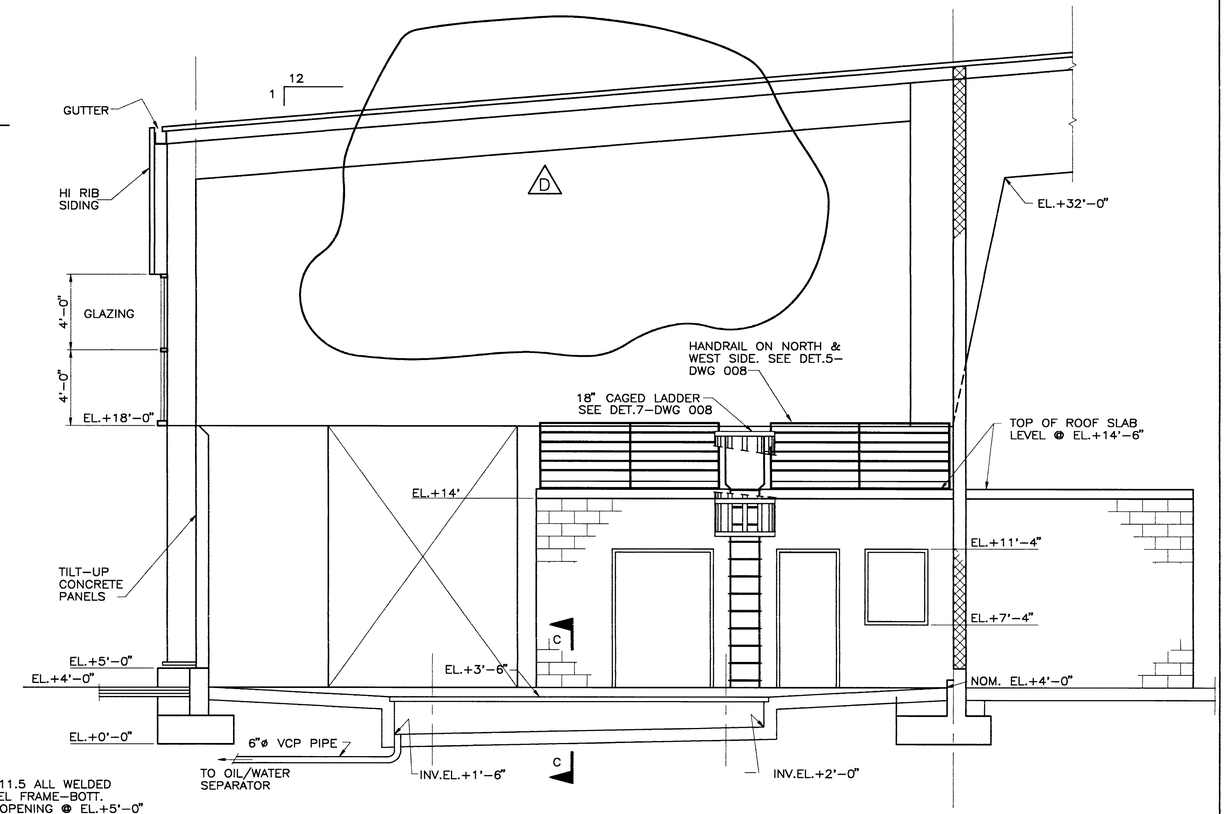

SECTION A – A

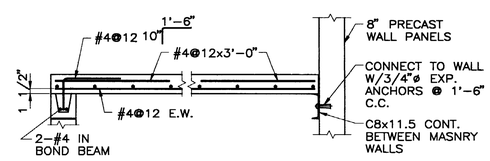

SECTION B – B
1/2"=1'-0"

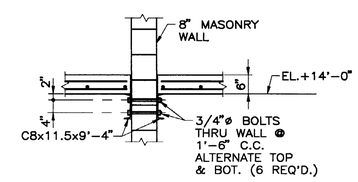

SECTION C – C
1/2"=1'-0"

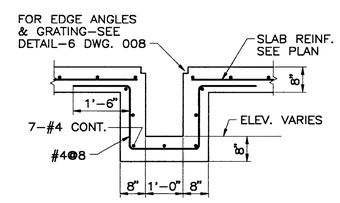

SECTION D – D
1/2"=1'-0"

NOTES:

1.) FOR FLOOR HARDENER, SEE DWG. 210.

2.) WALLS SHALL BE 6" THICK LIGHT WEIGHT MASONRY UNITS. REINFORCEMENT SHALL BE SIMILAR TO NOTE 1 ON DWG. 215.

3.) A 3 TON CAPACITY TROLLEY MOUNT AND MANUAL CHAIN HOIST SHALL BE PLACED ON EACH MONORAIL.

4 0 4 8
SCALE IN FEET

No.	DATE	BY	REVISION
D	10/5	RWC	ISSUED FOR ADDENDA #1
C	9/14	RWC	REINF. & HANDRAIL REV,D- BID PURPOSES
B	9/4	RWC	BID PURPOSES
A	8/21	RWC	FOR CLIENT REVIEW

JOB No. 78783	DESIGNED:	PROJECT ENGINEER: RWC
SCALE: 1/4"=1'-0"	DRAWN BY: VCH	APPROVED BY:
	CHECKED BY:	DATE:

URS CONSULTANTS

WESTERN REGION
500 N.E. MULTNOMAH
PORTLAND OREGON
97232

CITY OF SUNNYVALE CALIFORNIA

CITY OF SUNNYVALE
CALIFORNIA

SMaRT STATION
STRUCTURAL
VEHICLE MAINTENANCE BUILDING

SHEET 38/74

DRAWING NUMBER: 216

ISSUE D

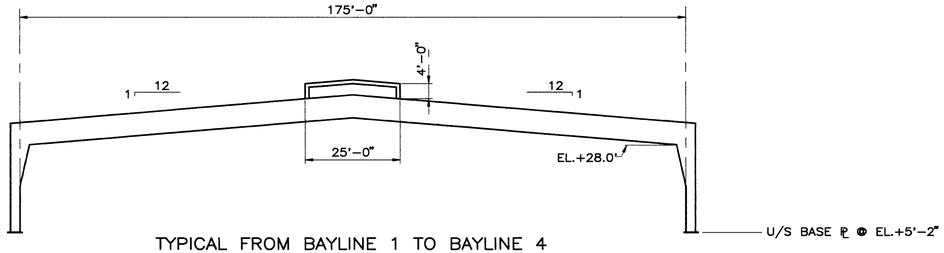

TYPICAL FROM BAYLINE 1 TO BAYLINE 4

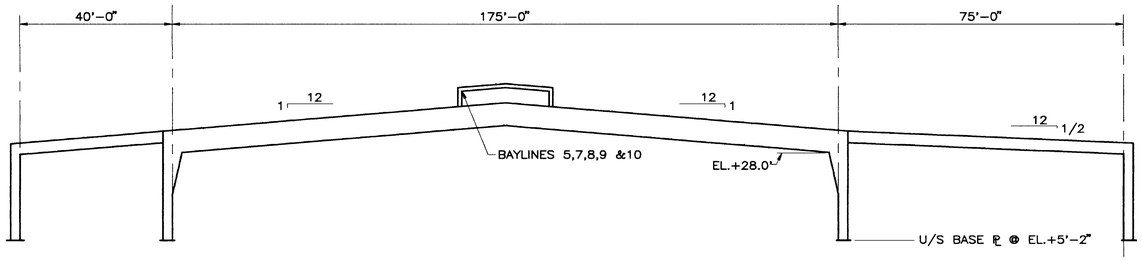

TYPICAL FROM BAYLINE 5 TO BAYLINE 10
(EXCEPT BAYLINE 6)

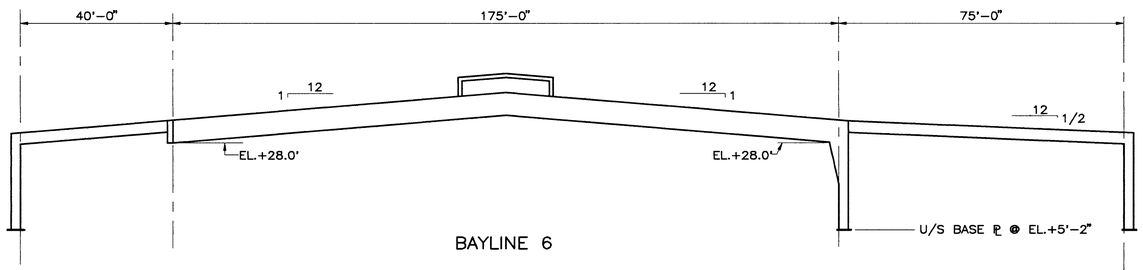

BAYLINE 6

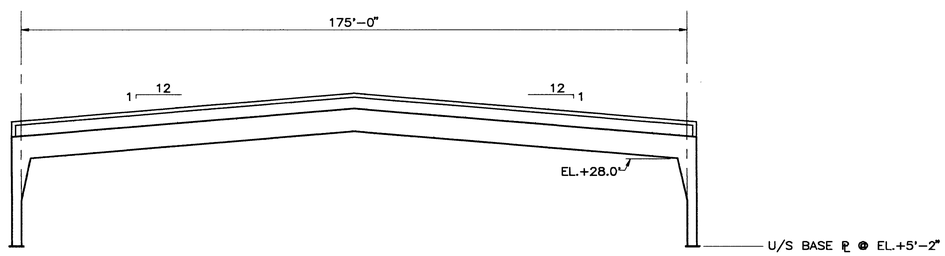

BAYLINE 11

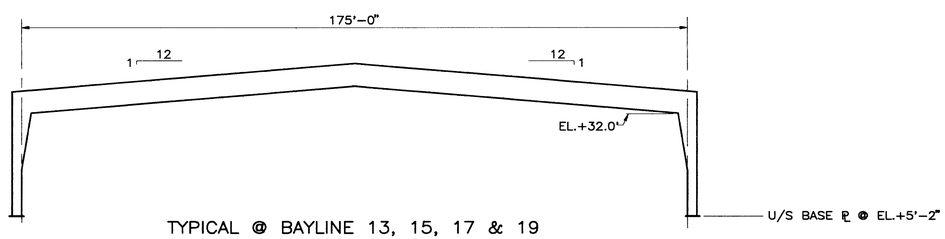

TYPICAL @ BAYLINE 13, 15, 17 & 19

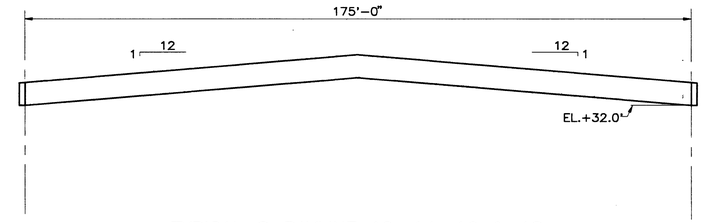

TYPICAL @ BAYLINE 12, 14, 16 & 18

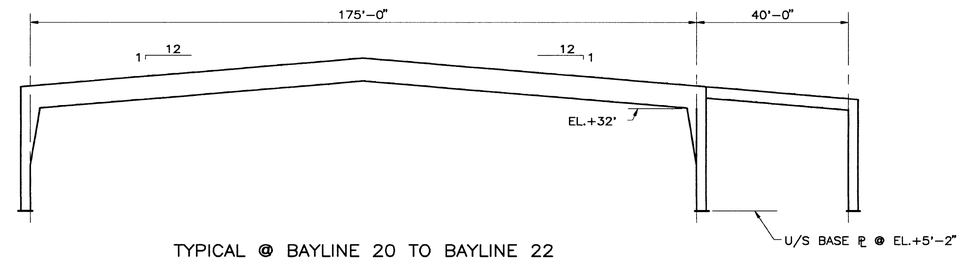

TYPICAL @ BAYLINE 20 TO BAYLINE 22

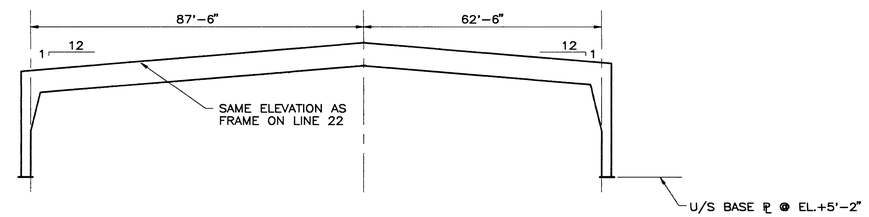

BAYLINE 23'

NOT IN THIS CONTRACT
THIS DRAWING ISSUED
FOR REFERENCE ONLY

20 0 20 40
SCALE IN FEET

No.	DATE	BY	REVISION
C	9/4	RWC	FOR REFERENCE ONLY
C	8/14	RWC	FOR PRE-ENGINEERED BID PURPOSES
B	7/21	RWC	COMPACTOR ADDITION
A	6/29	RWC	FOR BID PURPOSES

JOB No. 78783	DESIGNED:	PROJECT ENGINEER: RWC
SCALE: 1"=20'	DRAWN BY: H.HOLT	APPROVED BY:
	CHECKED BY:	DATE:

URS CONSULTANTS

WESTERN REGION
500 N.E. MULTNOMAH
PORTLAND OREGON
97232

CITY OF SUNNYVALE CALIFORNIA

CITY OF SUNNYVALE
CALIFORNIA
PR-92-15

SMaRT STATION
STRUCTURAL – MAIN BLDG. FRAME
SECTIONS AND DETAILS SH. 1

SHEET 39/74

DRAWING NUMBER: 219

ISSUE C

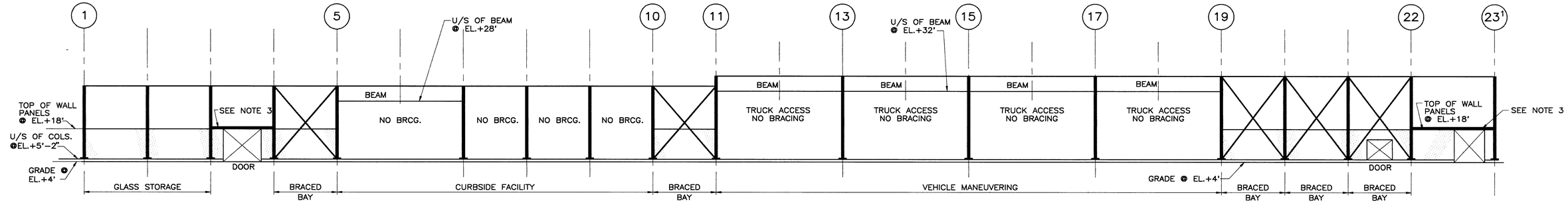

SOUTH ELEVATION (LINE L)

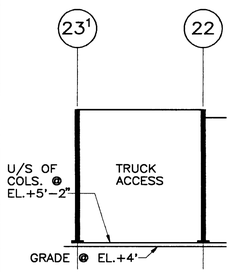

NORTH ELEVATION (LINE E)

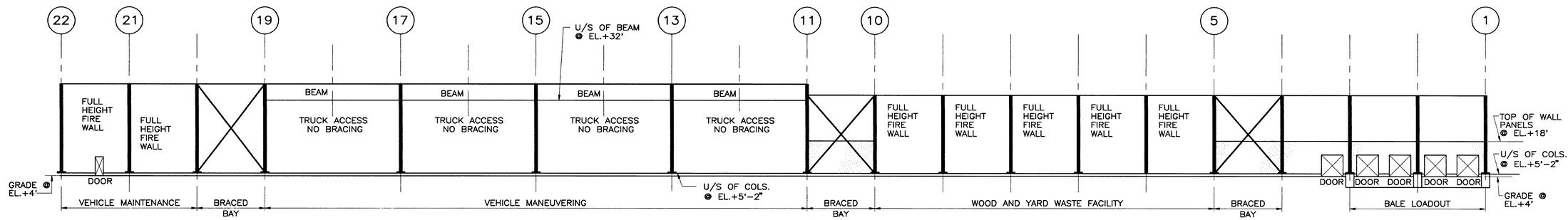

NORTH ELEVATION (LINE D)

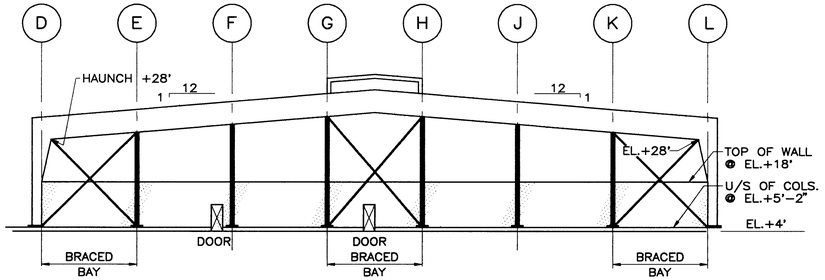

WEST ELEVATION (LINE 1)

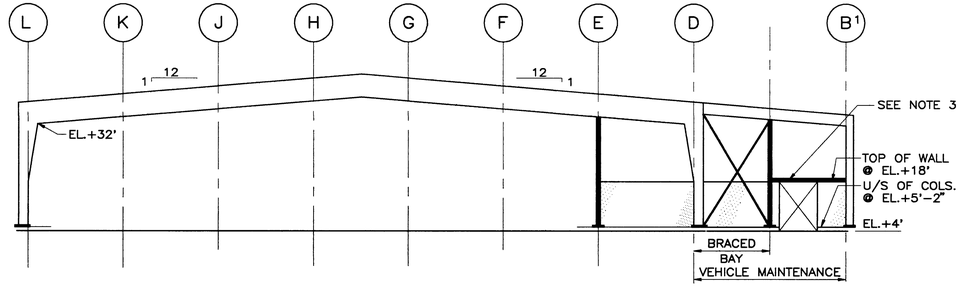

EAST ELEVATION (LINE 22)

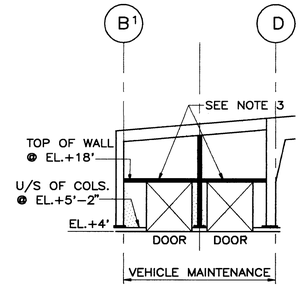

WEST ELEVATION (LINE 20)

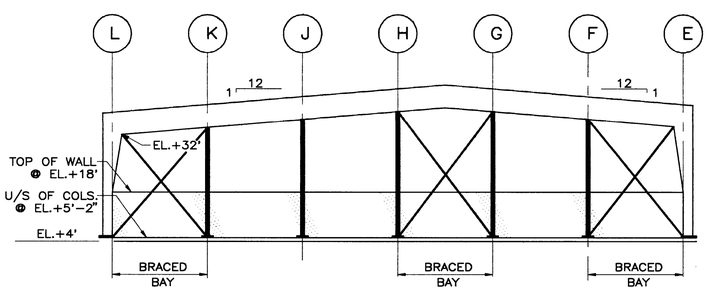

EAST ELEVATION (LINE 23¹)

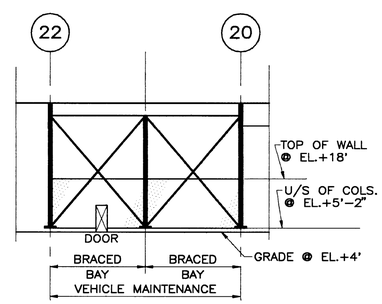

NORTH ELEVATION (LINE B¹)

NOT IN THIS CONTRACT
THIS DRAWING ISSUED FOR REFERENCE ONLY

NOTES:

1. GIRTS & PURLINS NOT SHOWN FOR CLARITY.
2. FOR WALL SECTIONS SEE DWG. 222.
3. TS 10x4x3/8 SEE SECTION A-A ON DWG. 223 (SUPPLIED BY BUILDING CONTRACTOR AND INSTALLED BY GENERAL CONTRACTOR.)
4. FOR TYPICAL FRAMES SEE DWG. 219

No.	DATE	BY	REVISION
C	9/4	RWC	FOR REFERENCE ONLY
C	8/14	RWC	FOR PRE-ENGINEERED BID PURPOSES
B	7/21	RWC	FOR COMPACTOR ADDITION
A	7/1	RWC	FOR OWNER REVIEW

JOB No. 78783	DESIGNED:	PROJECT ENGINEER: RWC
SCALE: 1" = 20'	DRAWN BY: H.HOLT	APPROVED BY:
	CHECKED BY:	DATE:

URS CONSULTANTS

WESTERN REGION
500 N.E. MULTNOMAH
PORTLAND OREGON
97232

CITY OF SUNNYVALE CALIFORNIA

CITY OF SUNNYVALE
CALIFORNIA
PR-92-15

SMaRT STATION
STRUCTURAL – MAIN BUILDING FRAME
ELEVATIONS – SHEET 1

DRAWING NUMBER: 220

SHEET 40/74

ISSUE C

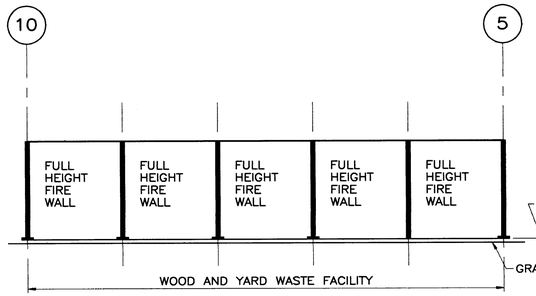

NORTH ELEVATION (LINE A)

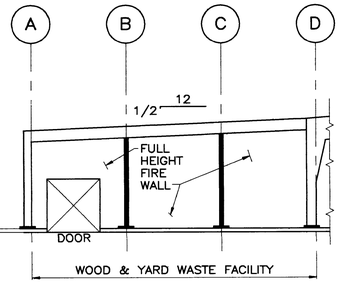

WEST ELEVATION (LINE 5)

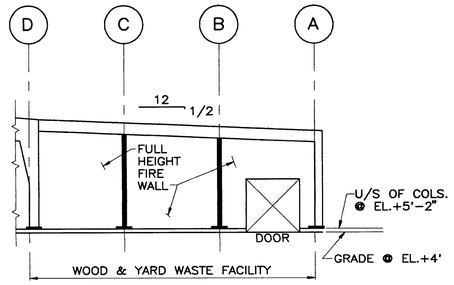

EAST ELEVATION (LINE 10)

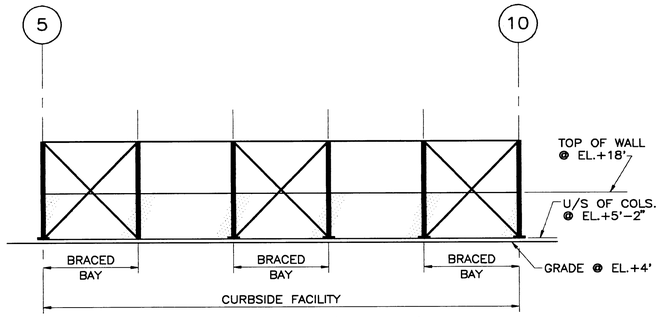

SOUTH ELEVATION (LINE M¹)

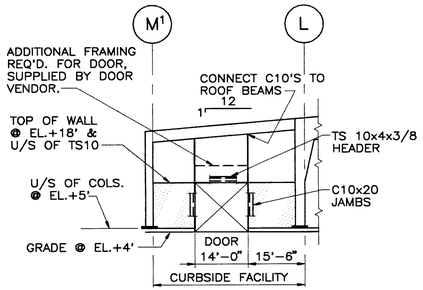

EAST ELEVATION (LINE 10)

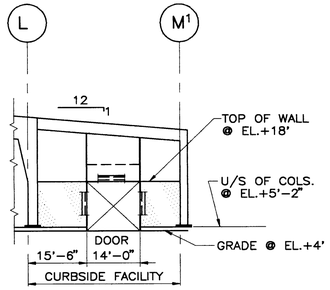

WEST ELEVATION (LINE 5)

NOTE: DOOR FRAME SUPPLIED BY BUILDING VENDOR & INSTALLED BY GENERAL CONTRACTOR AT TIME OF PANEL INSTALLATION. SEE SECTION C-C, F-F & DETAIL (N) ON DRAWING 223 FOR CONNECTION OF FRAME TO PANEL.

NOTES:

1. FOR NOTES SEE DWG. 220.

NOT IN THIS CONTRACT
THIS DRAWING ISSUED FOR REFERENCE ONLY

20 0 20 40
SCALE IN FEET

No.	DATE	BY	REVISION
D	9/4	RWC	FOR REFERENCE ONLY
C	8/14	RWC	FOR PRE-ENGINEERED BID PURPOSES
B	7/21	RWC	FOR COMPACTOR ADDITION
A	7/1	RWC	FOR OWNER REVIEW

JOB No. 78783	DESIGNED:	PROJECT ENGINEER: RWC
SCALE: 1" = 20'	DRAWN BY: H.HOLT	APPROVED BY:
	CHECKED BY:	DATE:

URS CONSULTANTS

WESTERN REGION
500 N.E. MULTNOMAH
PORTLAND OREGON
97232

CITY OF SUNNYVALE CALIFORNIA

CITY OF SUNNYVALE
CALIFORNIA
PR-92-15

SMaRT STATION
STRUCTURAL – MAIN BUILDING FRAME
ELEVATIONS – SHEET 2

DRAWING NUMBER: 221

SHEET 41/74

ISSUE D

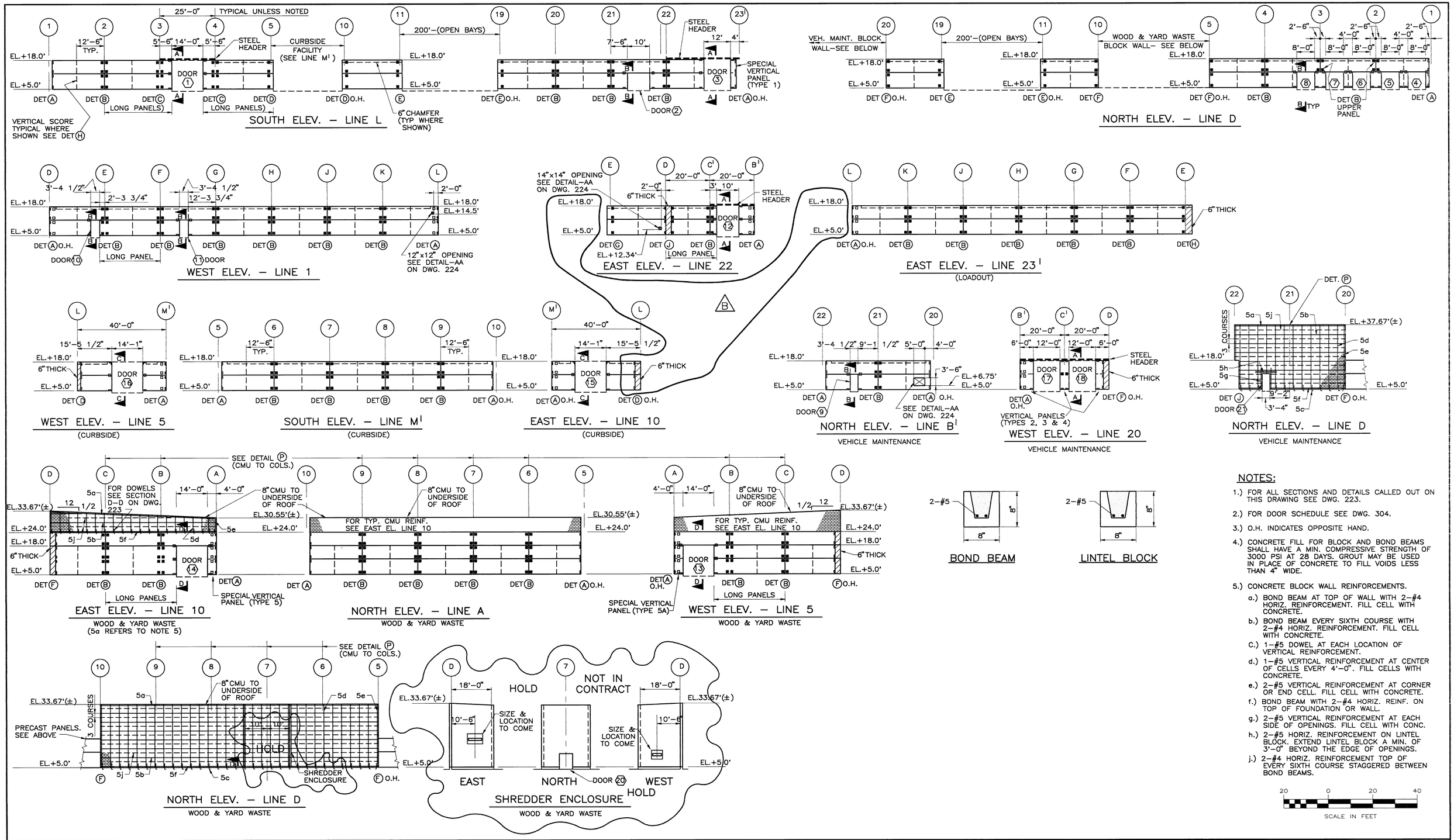

NOTES:

1.) FOR ALL SECTIONS AND DETAILS CALLED OUT ON THIS DRAWING SEE DWG. 223.

2.) FOR DOOR SCHEDULE SEE DWG. 304.

3.) O.H. INDICATES OPPOSITE HAND.

4.) CONCRETE FILL FOR BLOCK AND BOND BEAMS SHALL HAVE A MIN. COMPRESSIVE STRENGTH OF 3000 PSI AT 28 DAYS. GROUT MAY BE USED IN PLACE OF CONCRETE TO FILL VOIDS LESS THAN 4" WIDE.

5.) CONCRETE BLOCK WALL REINFORCEMENTS.

a.) BOND BEAM AT TOP OF WALL WITH 2–#4 HORIZ. REINFORCEMENT. FILL CELL WITH CONCRETE.

b.) BOND BEAM EVERY SIXTH COURSE WITH 2–#4 HORIZ. REINFORCEMENT. FILL CELL WITH CONCRETE.

c.) 1–#5 DOWEL AT EACH LOCATION OF VERTICAL REINFORCEMENT.

d.) 1–#5 VERTICAL REINFORCEMENT AT CENTER OF CELLS EVERY 4'–0". FILL CELLS WITH CONCRETE.

e.) 2–#5 VERTICAL REINFORCEMENT AT CORNER OR END CELL. FILL CELL WITH CONCRETE.

f.) BOND BEAM WITH 2–#4 HORIZ. REINF. ON TOP OF FOUNDATION OR WALL.

g.) 2–#5 VERTICAL REINFORCEMENT AT EACH SIDE OF OPENINGS. FILL CELL WITH CONC.

h.) 2–#5 HORIZ. REINFORCEMENT ON LINTEL BLOCK. EXTEND LINTEL BLOCK A MIN. OF 3'–0" BEYOND THE EDGE OF OPENINGS.

j.) 2–#4 HORIZ. REINFORCEMENT TOP OF EVERY SIXTH COURSE STAGGERED BETWEEN BOND BEAMS.

No.	DATE	BY	REVISION
B	10/5	RWC	ISSUED FOR ADDENDA #1
A	9/4	RWC	FOR BID PURPOSES
A	8/21	RWC	FOR CLIENT REVIEW

JOB No. 78783	DESIGNED:	PROJECT ENGINEER: RWC
SCALE: 1"=20'	DRAWN BY: VCH	APPROVED BY:
	CHECKED BY:	DATE:

URS CONSULTANTS

WESTERN REGION
500 N.E. MULTNOMAH
PORTLAND OREGON
97232

CITY OF SUNNYVALE CALIFORNIA

SMaRT STATION
STRUCTURAL
MAIN BUILDING – WALL DETAILS SH.1

DRAWING NUMBER: 222

SHEET 42 / 74

ISSUE B

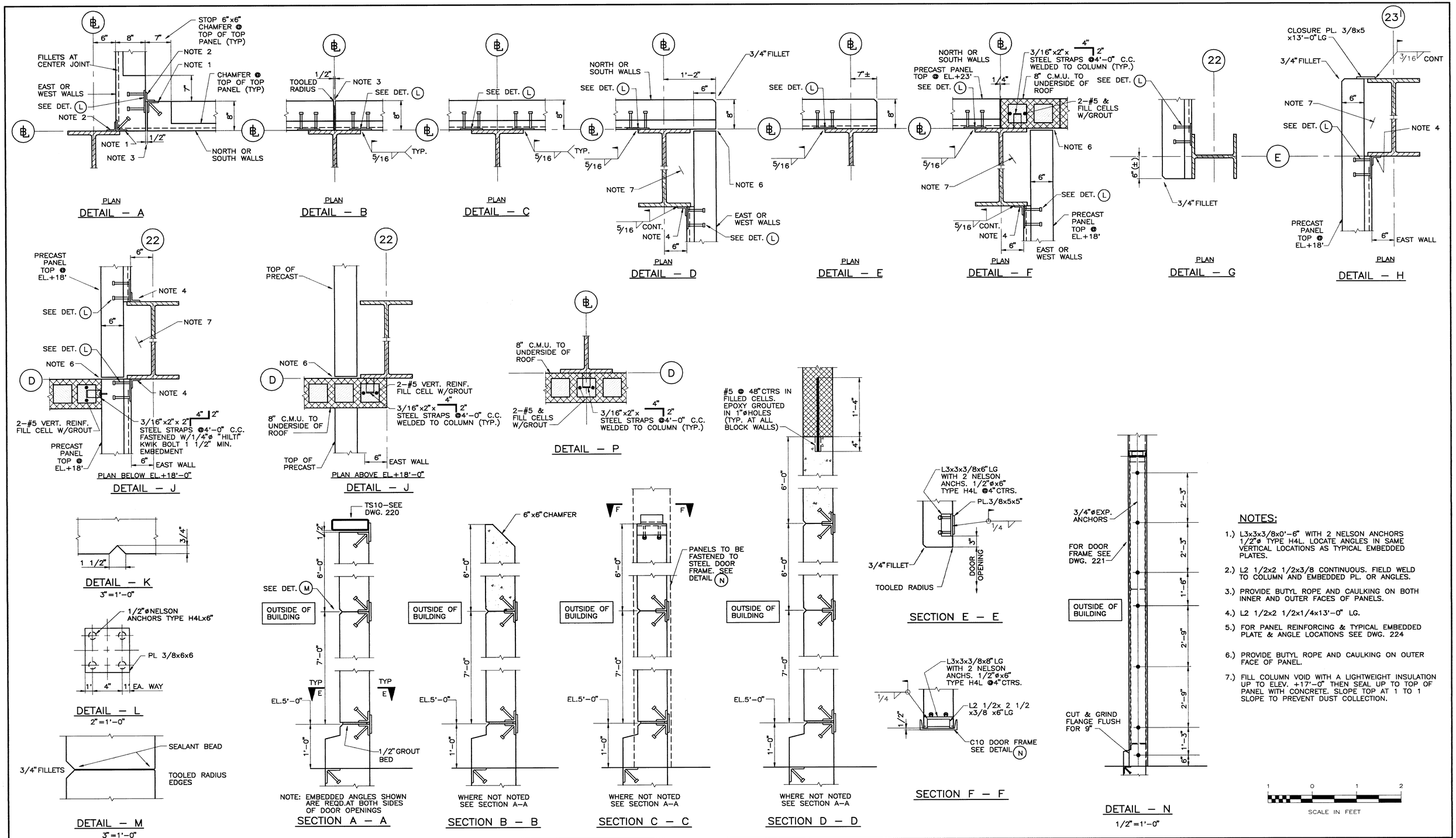

NOTES:

1.) L3x3x3/8x0'-6" WITH 2 NELSON ANCHORS 1/2"ø TYPE H4L. LOCATE ANGLES IN SAME VERTICAL LOCATIONS AS TYPICAL EMBEDDED PLATES.

2.) L2 1/2x2 1/2x3/8 CONTINUOUS. FIELD WELD TO COLUMN AND EMBEDDED PL. OR ANGLES.

3.) PROVIDE BUTYL ROPE AND CAULKING ON BOTH INNER AND OUTER FACES OF PANELS.

4.) L2 1/2x2 1/2x1/4x13'-0" LG.

5.) FOR PANEL REINFORCING & TYPICAL EMBEDDED PLATE & ANGLE LOCATIONS SEE DWG. 224

6.) PROVIDE BUTYL ROPE AND CAULKING ON OUTER FACE OF PANEL.

7.) FILL COLUMN VOID WITH A LIGHTWEIGHT INSULATION UP TO ELEV. +17'-0" THEN SEAL UP TO TOP OF PANEL WITH CONCRETE. SLOPE TOP AT 1 TO 1 SLOPE TO PREVENT DUST COLLECTION.

No.	DATE	BY	REVISION
B	9/14	RWC	WELD SIZE REV,D – FOR BID PURPOSES
A	9/4	RWC	FOR BID PURPOSES
A	8/21	RWC	FOR OWNER REVIEW

JOB No. 78783	DESIGNED: VCH	PROJECT ENGINEER: RWC
SCALE: 1"=1'-0" UNLESS NOTED	DRAWN BY: PCF	APPROVED BY:
	CHECKED BY:	DATE:

URS CONSULTANTS

WESTERN REGION
500 N.E. MULTNOMAH
PORTLAND OREGON
97232

CITY OF SUNNYVALE CALIFORNIA

CITY OF SUNNYVALE
CALIFORNIA
PR-92-15

SMaRT STATION
STRUCTURAL
MAIN BUILDING – WALL DETAILS SH.2

DRAWING NUMBER: 223

SHEET 43/74

ISSUE B

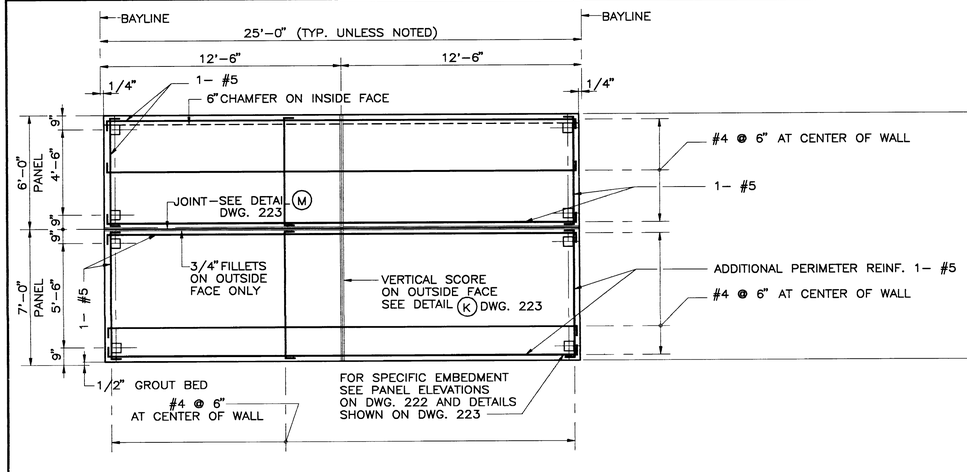

TYPICAL 25'-0" PANEL
1/4"=1'-0"

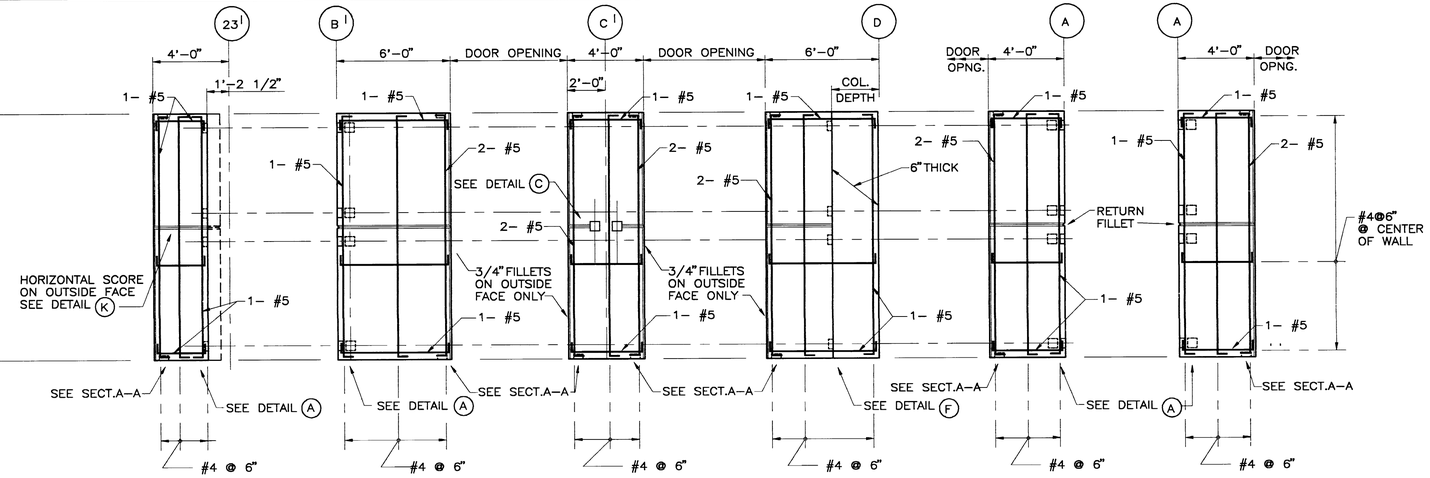

TYPE 1 TYPE 2 TYPE 3 TYPE 4 TYPE 5 TYPE 5A

SPECIAL VERTICAL PANELS
1/4"=1'-0"

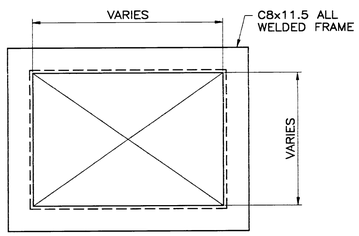

FOR ADDITIONAL REINF. REQ'D. AT OPENINGS SEE DETAIL-4, DWG. 008

DETAIL – AA (DWG. 222)

NOTES:

1. FOR PANEL ELEVATIONS SEE DWG. 222
2. FOR PANEL CONNECTION DETAILS SEE DWG. 223
3. PANEL FINISH. (C)
   a) EXTERIOR FINISH SHALL BE A FIELD APPLIED "THOROSEAL" COATING–REFER TO THE SPECIFICATIONS.
   b) INTERIOR FINISH– SEAL AS PER SPECIFICATIONS.

2 0 2 4
SCALE IN FEET

No.	DATE	BY	REVISION
C	10/5	RWC	ISSUED FOR ADDENDA #1
B	9/14	RWC	DET. NO. REV,D–FOR BID PURPOSES
A	9/4	RWC	FOR BID PURPOSES
A	8/21	RWC	FOR OWNER REVIEW

JOB No. 78783	DESIGNED:	PROJECT ENGINEER: RWC
SCALE: 1/2"=1'-0" UNLESS NOTED	DRAWN BY: VCH	APPROVED BY:
	CHECKED BY:	DATE:

URS CONSULTANTS

WESTERN REGION
500 N.E. MULTNOMAH
PORTLAND OREGON
97232

CITY OF SUNNYVALE CALIFORNIA

SMaRT STATION
STRUCTURAL
MAIN BUILDING – WALL DETAILS SH.3

DRAWING NUMBER: 224

SHEET 44/74

ISSUE C