TITLE SHEET

PLANS FOR THE CONSTRUCTION OF:

ARQUES AVENUE - MAUDE AVENUE SANITARY SEWER FORCE MAIN

UY - 81 - 1

CITY OF SUNNYVALE

COUNTY OF SANTA CLARA, CALIFORNIA

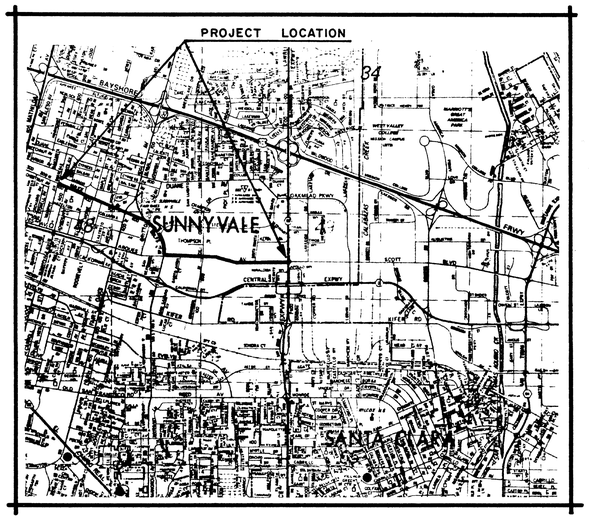

VICINITY MAP

N. T. S.

HMH INCORPORATED
Civil Engineers · Planners · Surveyors ·
1353 OAKLAND ROAD, SAN JOSE, CALIFORNIA 95112
(408) 294-3232

H. M. H. APPROVAL BY:

E. J. Miller 7/06/81

E. J. MILLER, R.C.E. 14883 DATE

APPROVED BY:		REVIEWED FOR APPROVAL BY:			DESIGNED BY:	DRAWN BY:	CHECKED BY:	FIELD BOOK: NO. PG	DATE: May, 1981
Water System Engineer	Date	ASS'T. CITY ENGINEER	R.E. NO.	DATE	TITLE:				SHEET 1 OF 17
Traffic Engineer	Date	APPROVED BY: James Wahl		7/14/81	SCALE: Horiz. 1"= Vert. 1"=	DEPARTMENT OF PUBLIC WORKS CITY OF SUNNYVALE			FILE NO. UY-81-1
Fire	Date	Acting DIRECTOR OF PUBLIC WORKS	R.E. NO.	DATE					
Engineer Const. Supervisor	Date								

Plotted 11/59 on 200' long file 691-81

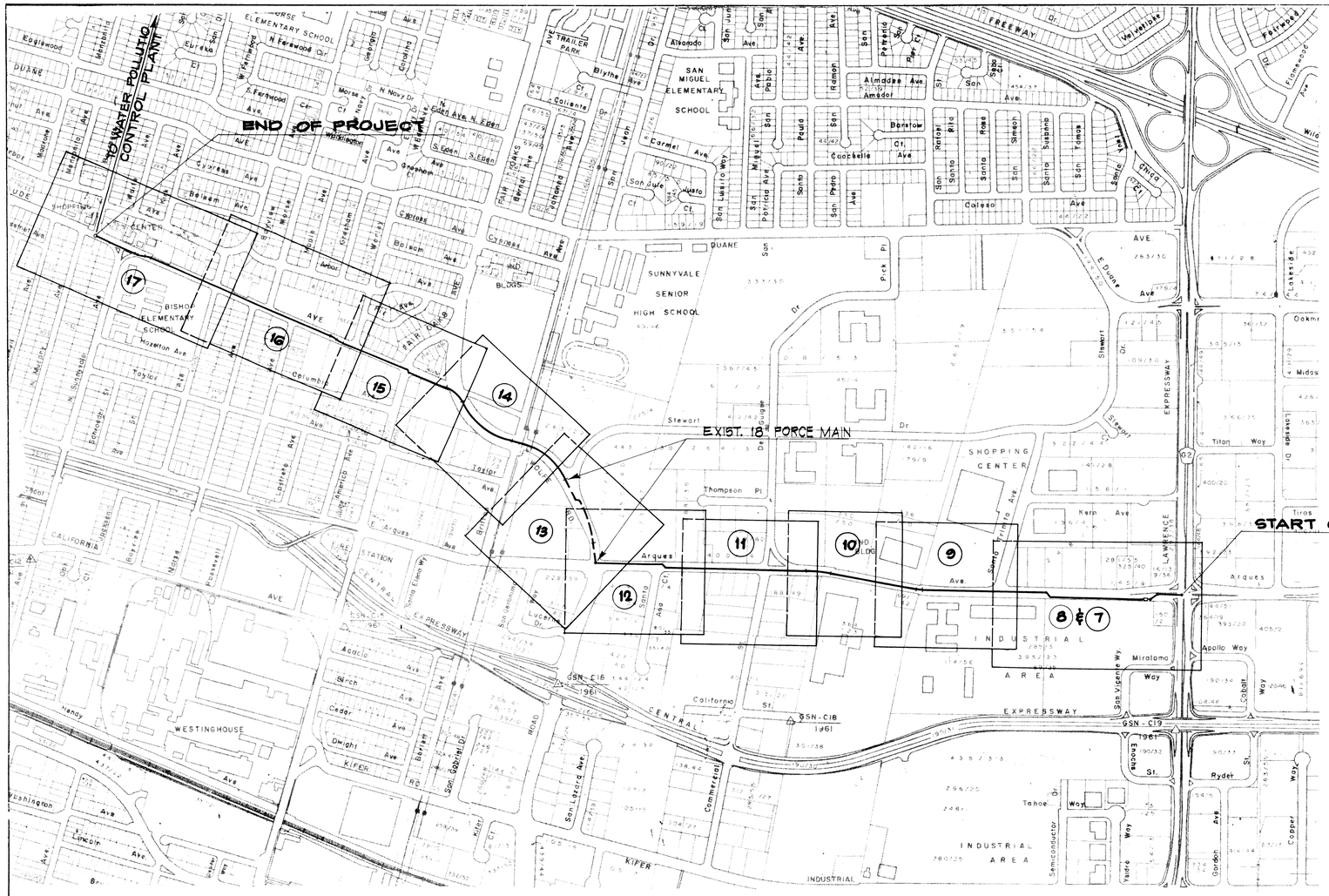

LEGEND :

- SANITARY SEWER & Manhole
- SANITARY SEWER & FLUSHING INLET
- STORM SEWER & MANHOLE
- STORM INLET & LATERAL
- WATER MAIN
- FIRE HYDRANT
- ELECTRICAL
- GAS
- TELEPHONE
- NITROGEN

LOCATION MAP

SCALE : 1" = 500'

LIST OF DRAWINGS :

SHEET NO.	SHEET TITLE
1	COVER SHEET
2	LOCATION MAP , LIST OF DRAWINGS , LEGEND
3	DETAILS ~ GENERAL
4	DETAILS ~ PUMP STATION ON ARQUES AVE.
5 & 6	ELECTRICAL ~ PUMP STATION ON ARQUES AVE.
7	PLAN & PROFILE ~ PUMP STATION ON ARQUES AVE.
8 Thru 17	PLAN & PROFILE ~ 18" FORCE MAIN

HMH INCORPORATED
Civil Engineers · Planners · Surveyors
1333 OAKLAND ROAD, SAN JOSE, CALIFORNIA 95112
(408) 294-3236

APPROVED BY	APPROVED BY	APPROVED BY	APPROVED BY	APPROVED BY
LIGHTING AND TRAFFIC	FIRE INSPECTOR	WATER SUPERINTENDENT	FIELD ENGINEER	DIRECTOR OF PUBLIC WORKS

DEPARTMENT OF PUBLIC WORKS
CITY OF SUNNYVALE

DESIGNED BY | DRAWN BY | CHECKED BY | FIELD BOOK NO | DATE May, 1981

SCALE HORIZ 1" = VERT 1" =

TITLE SANITARY SEWER FORCE MAIN UY-81-1

17 OF 2

GB1-81

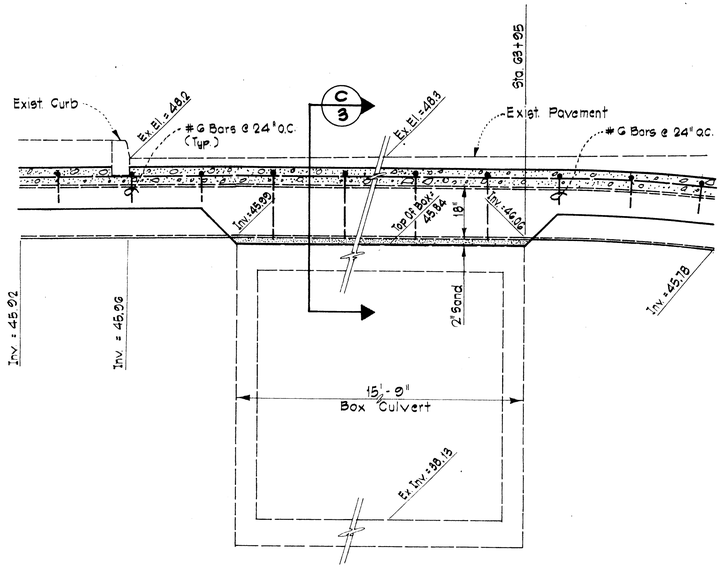

SECTION A/3

Scale : 1" = 2'

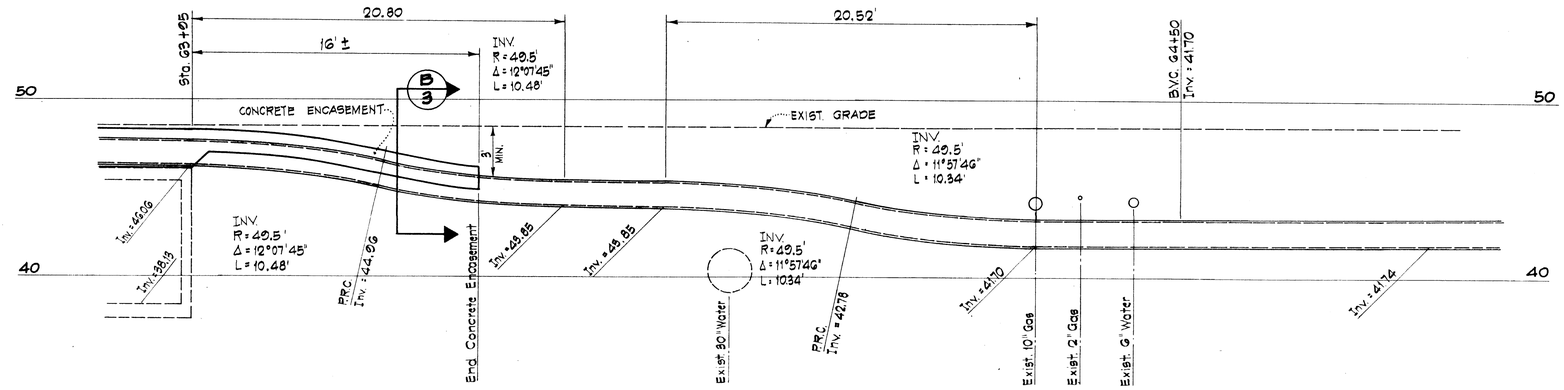

PROFILE ~ 18" F.M. CROSSING @ EXIST. BOX CULVERT

SCALE : 1" = 4'

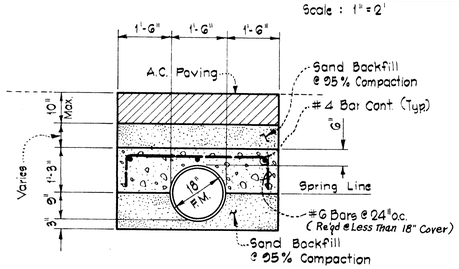

SECTION B/3

Scale : 1" = 2'

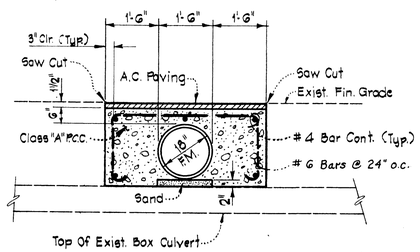

SECTION C/3

Scale : 1" = 2'

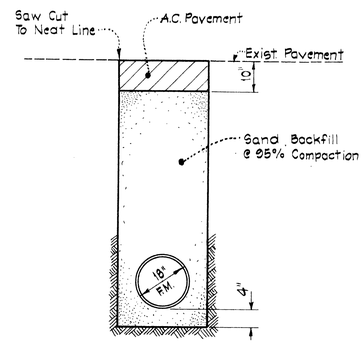

TYPICAL TRENCH DETAIL PAVED AREA D/3

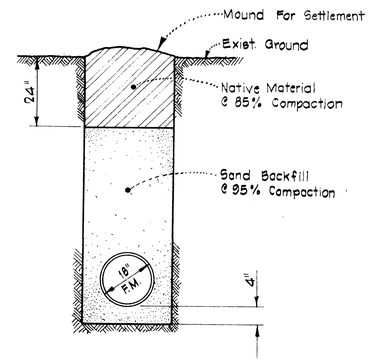

TYPICAL TRENCH DETAIL UNIMPROVED AREA E/3

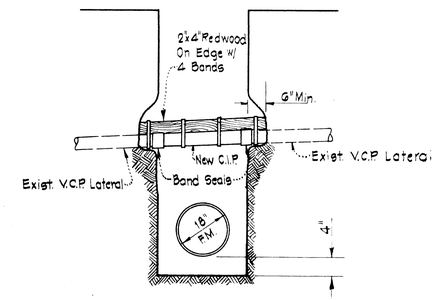

DETAIL ~ SANITARY SEWER LATERAL REPLACEMENT F/3

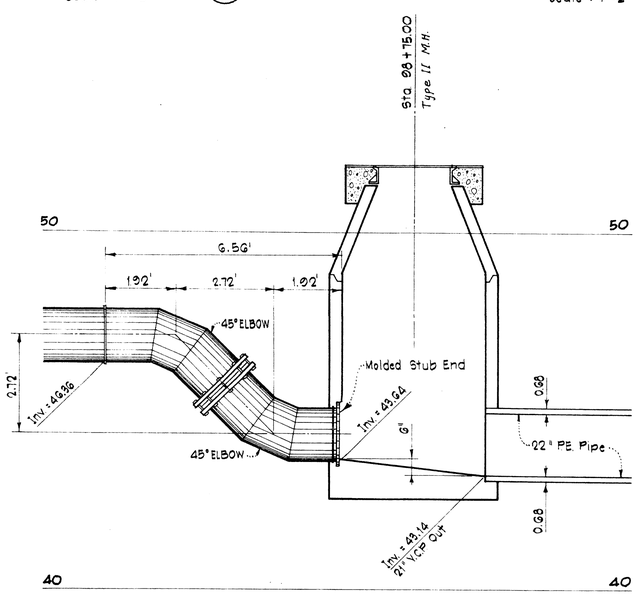

SECTION G/3

SCALE : 1" = 2'

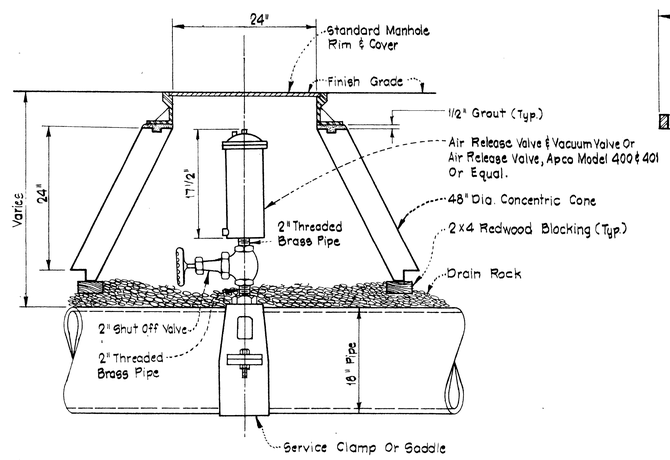

TYPICAL INSTALLATION AIR RELEASE AND AIR RELEASE & VACUUM VALVE H/3

Not To Scale

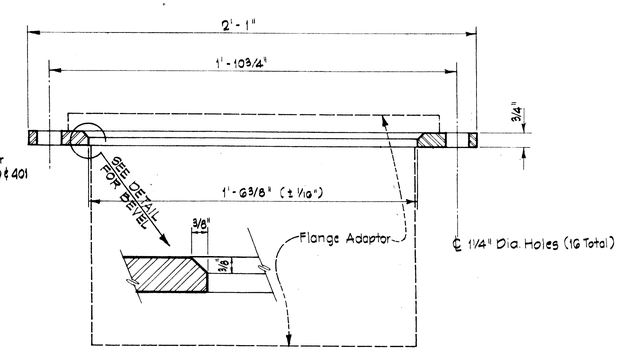

DETAIL ~ 18" SLIP-ON METAL FLANGE J/3

Scale : 1" = 4'

Date	
Scale	
Designed	
Drawn	
Checked	
Proj. Engr.	

HMH INCORPORATED
Civil Engineers · Planners · Surveyors
1333 OAKLAND ROAD, SAN JOSE, CALIFORNIA 95112
(408) 298-3232

APPROVED BY:		REVIEWED FOR APPROVAL BY:		DESIGNED BY	DRAWN BY	CHECKED BY	FIELD BOOK NO. PG	DATE
Water System Engineer	Date	ASS'T. CITY ENGINEER R.E. NO.	DATE	TITLE: SANITARY SEWER FORCE MAIN UY - 81 - 1				SHEET 3 OF 17
Traffic Engineer	Date	APPROVED BY:						
Fire	Date			SCALE: Horiz. 1"= Vert. 1"=	DEPARTMENT OF PUBLIC WORKS CITY OF SUNNYVALE			FILE NO.
Engineer Const. Supervisor	Date	DIRECTOR OF PUBLIC WORKS R.E. NO.	DATE					

S4598 PRINTED ON NO. 1000H CLEARPRINT

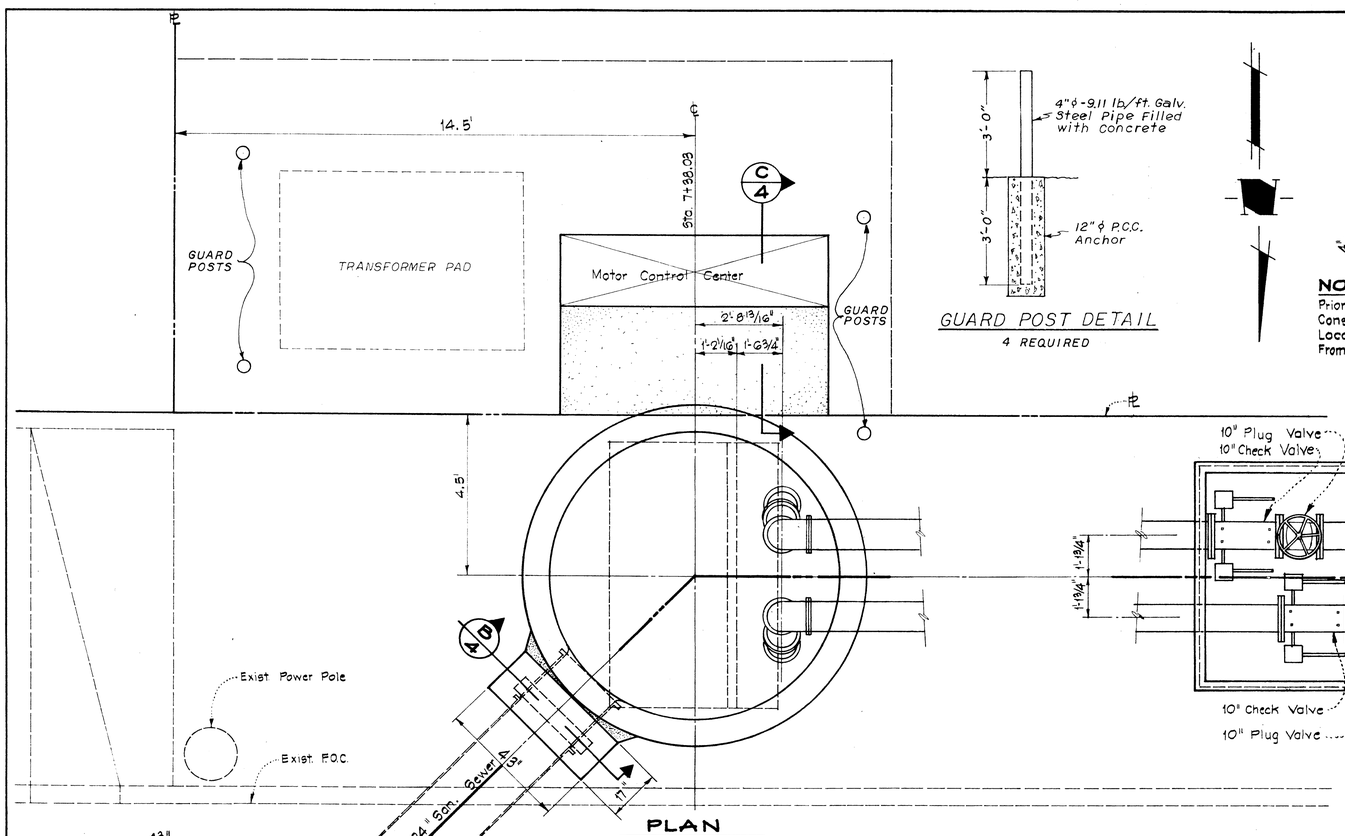

PLAN

Scale : 1" = 2'

GUARD POST DETAIL

4 REQUIRED

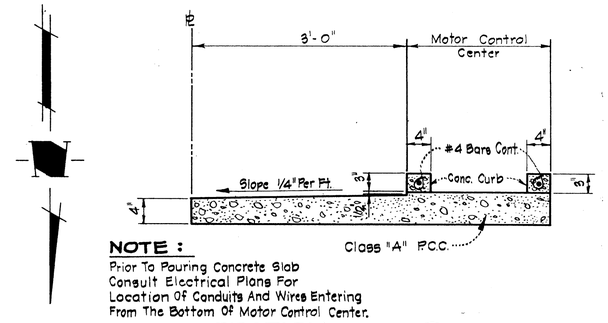

NOTE :
Prior To Pouring Concrete Slab
Consult Electrical Plans For
Location Of Conduits And Wires Entering
From The Bottom Of Motor Control Center.

SECTION C/4

SCALE : 1" = 1'-0"

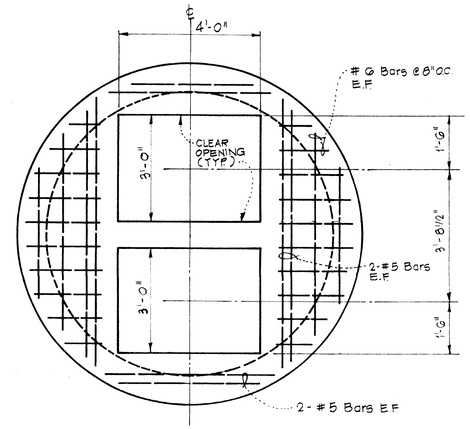

SUMP COVER DETAIL

SCALE : 1" = 2'

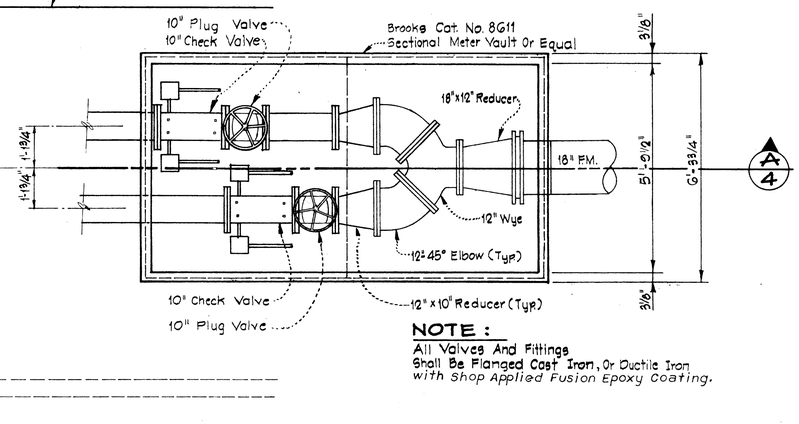

NOTE :
All Valves And Fittings
Shall Be Flanged Cast Iron, Or Ductile Iron
with Shop Applied Fusion Epoxy Coating.

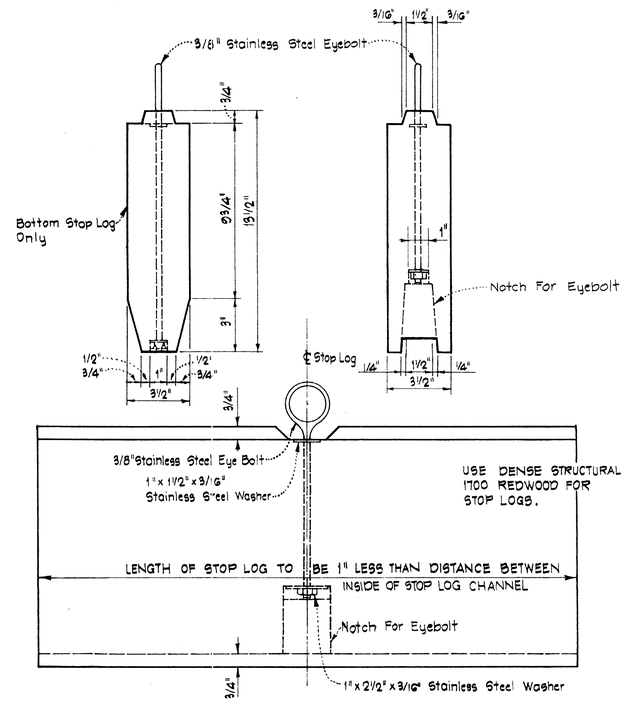

STOP LOG DETAILS

SCALE : 1" = 4"
2 REQUIRED
SEE SECTION B/4

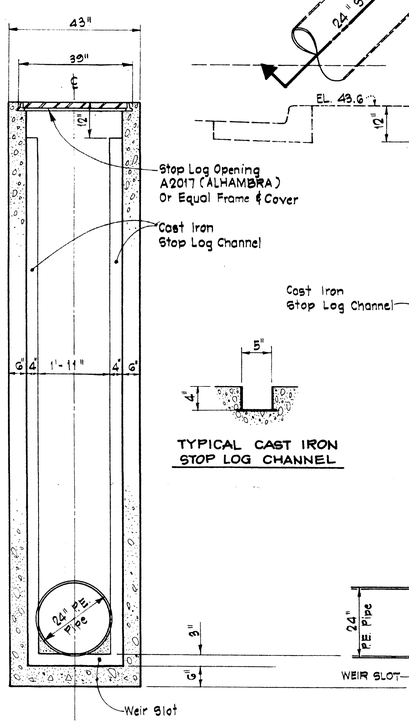

TYPICAL CAST IRON STOP LOG CHANNEL

SECTION B/4

Scale : 1" = 2'

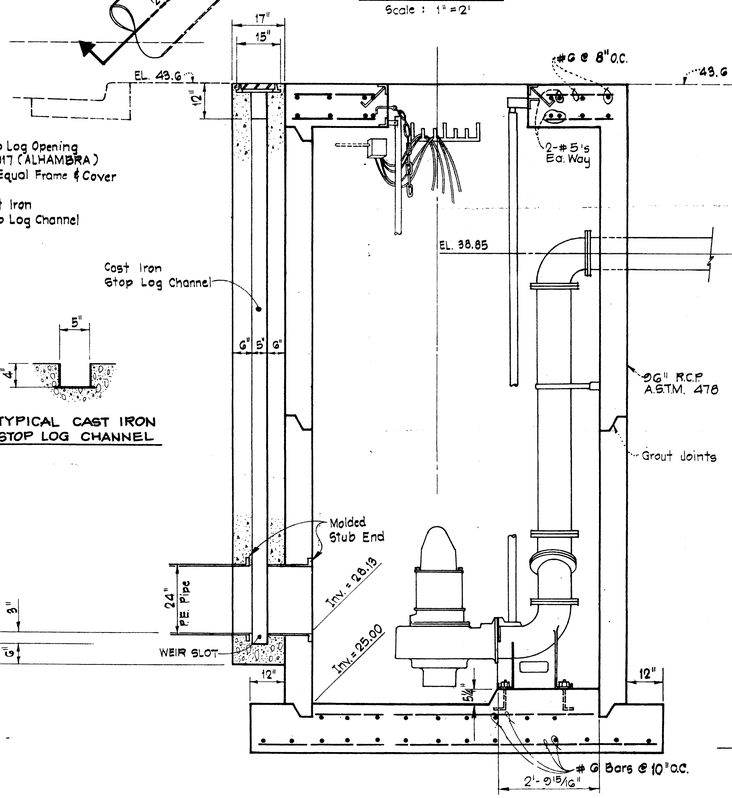

SECTION A/4

Scale : 1" = 2'

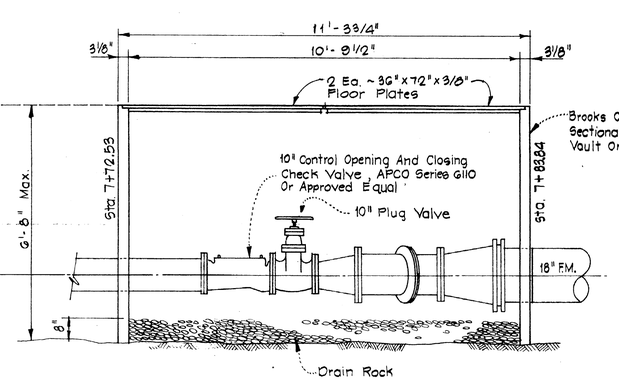

NOTE: PUMP LAYOUT ARRANGEMENT AND PIPING DETAILS MAY VARY DEPENDING ON THE PUMP FURNISHED. CONTRACTOR TO PROVIDE DETAILED PUMP STATION DRAWINGS FOR APPROVAL BEFORE COMMENCING CONSTRUCTION.

APPROVED BY:		REVIEWED FOR APPROVAL BY:			DESIGNED BY:	DRAWN BY: J.M.P	CHECKED BY:	FIELD BOOK: NO. PG	DATE: May, 1981
Water System Engineer	Date	ASS'T. CITY ENGINEER	R.E. NO.	DATE	TITLE: SANITARY SEWER FORCE MAIN UY - 81 - 1				SHEET 4 OF 17
Traffic Engineer	Date	APPROVED BY:							
Fire	Date				SCALE: Horiz. 1"=s Vert. 1"=s	DEPARTMENT OF PUBLIC WORKS CITY OF SUNNYVALE			FILE NO.
Engineer Const. Supervisor	Date	DIRECTOR OF PUBLIC WORKS	R.E. NO.	DATE					

HMH INCORPORATED
Civil Engineers · Planners · Surveyors ·
1333 OAKLAND ROAD, SAN JOSE, CALIFORNIA 95112
(408) 294-3232

G01-81

PRINTED ON NO. 1000H CLEARPRINT

NOTES:

1. CONDUIT TURNUPS IN MCC SHALL BE RIGID GALVANIZED STEEL.
2. PROVIDE CONDUIT SEAL FOR EACH CONDUIT FROM PUMP STATION TO MCC.

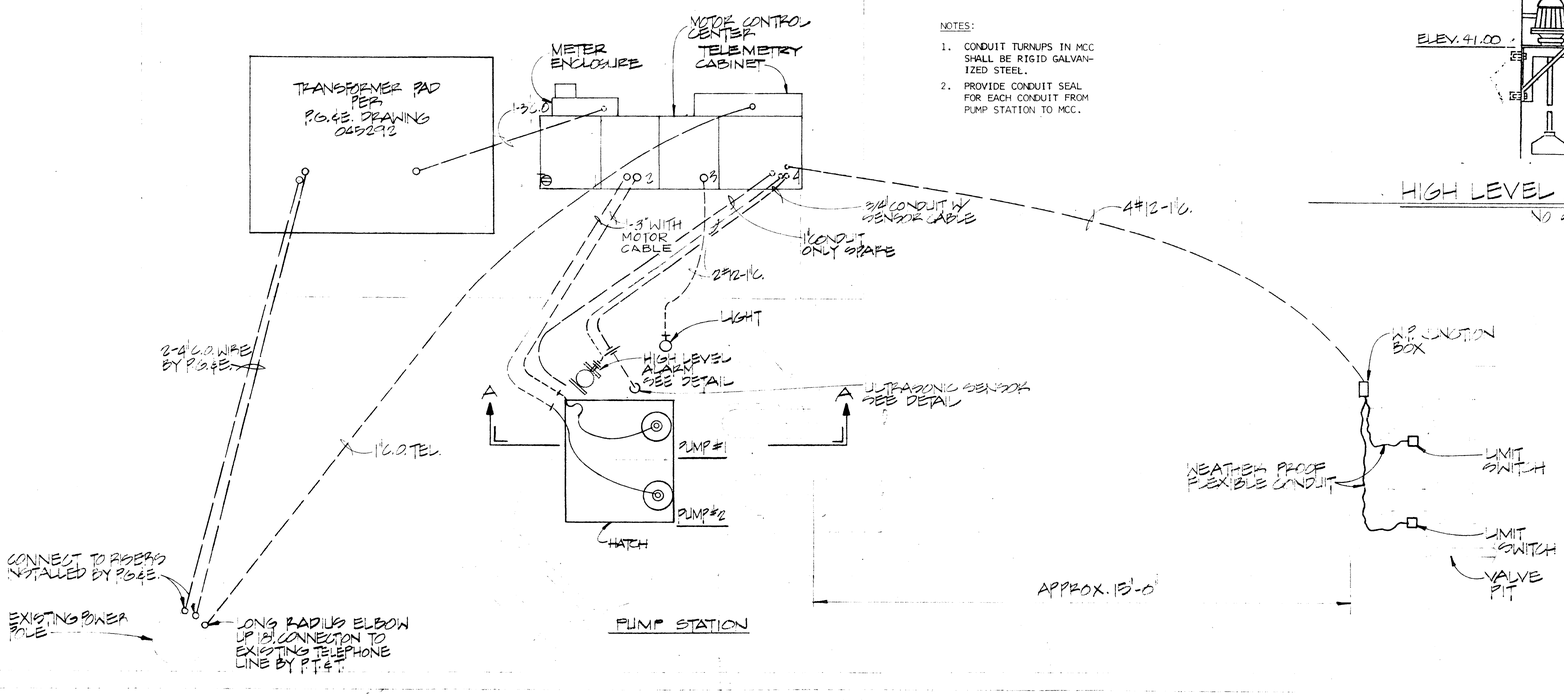

PUMP STATION

SITE PLAN

SCALE: 1" = 2'-0"

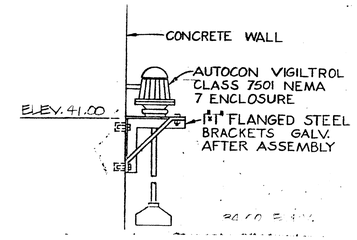

HIGH LEVEL ALARM DETAIL

NO SCALE

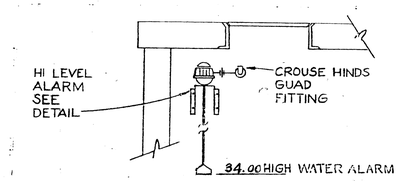

PARTIAL WET PIT

NO SCALE

NOTE
1. LIMIT SWITCH TO BE NEMA 4 MICRO SWITCH W/ BRACKET TO CLOSE WHEN VALVE IS FULLY OPEN.

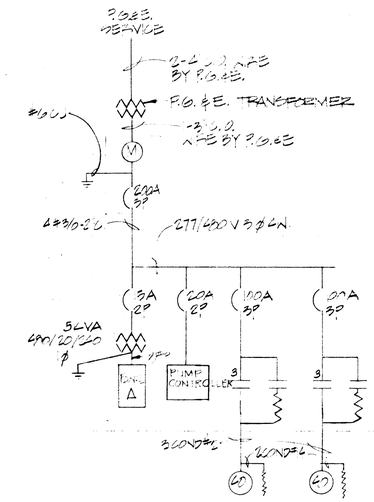

SINGLE LINE DIAGRAM

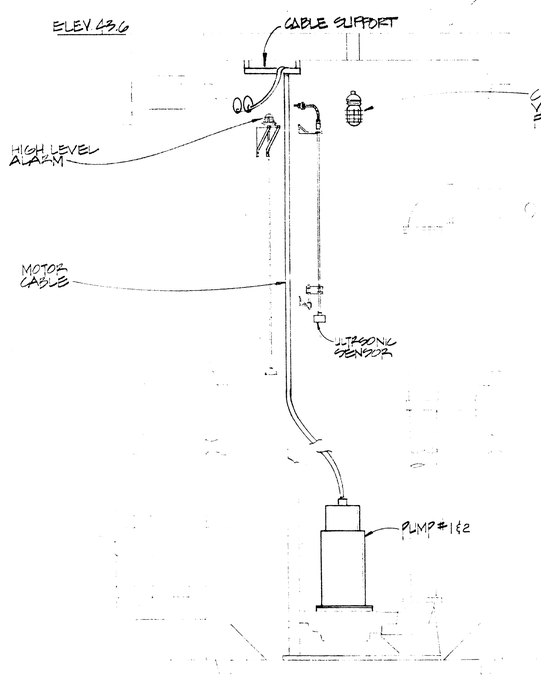

SECTION A

SCALE: 1" = 2'-0"

MOTOR CONTOL CENTER

277/480V 3ϕ 4W NAMEPLATE	CONDUIT & MCC CUBICLE NO.	CONDUIT SIZE	WIRE #10	WIRE #12	WIRE #14	OTHER	CKT. BKR AMP	CKT. BKR POLES	CKT. BKR FRAME	STARTER SIZE	STARTER TYPE	STARTER HP
5KA TRANSFORMER	1J											
PANEL A 12 CKT.	1G											
TRANSFORMER BREAKER	1A			3			15	2	EHB			
PUMP #1	2J					3/#2 2/#14	100	3	MCP	4	RVNR	40
PUMP #2	3J					3/#2 2/#14	100	3	MCP	4	RVNR	40
ANALOG PUMP CONTROLLER	4J	1"										

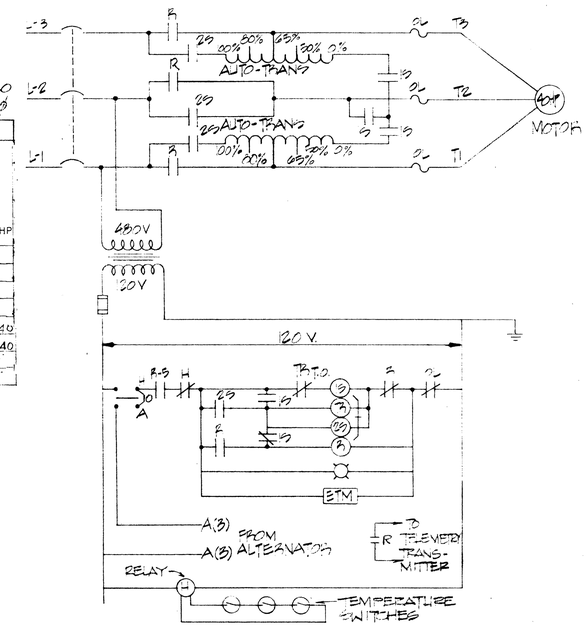

PUMP NO1. NO2

APPROVED BY:	
Water System Engineer	Date
Traffic Engineer	Date
Fire	Date
Engineer Const. Supervisor	Date

REVIEWED FOR APPROVAL BY:

ASS'T. CITY ENGINEER R.E. NO. DATE

APPROVED BY:

DIRECTOR OF PUBLIC WORKS R.E. NO. DATE

RMT ENGINEERS INCORPORATED
RICHARD M. TRAINER ENGINEERS INC.
CONSULTING ELECTRICAL & MECHANICAL ENGINEERS
744 SAN ANTONIO RD., PALO ALTO, CA 94303 (415) 494-3565

DESIGNED BY	DRAWN BY	CHECKED BY	FIELD BOOK NO. PG	DATE
HWH	BG	HWH		6-12-81

TITLE: ELECTRICAL PLAN, SITE & DETAILS SANITARY SEWER FORCE MAIN UY-81-1

SHEET 3 OF 17

SCALE: AS NOTED Horiz. 1" = Vert. 1" =

DEPARTMENT OF PUBLIC WORKS
CITY OF SUNNYVALE

FILE NO.

54286 PRINTED ON NO. 1000H CLEARPRINT

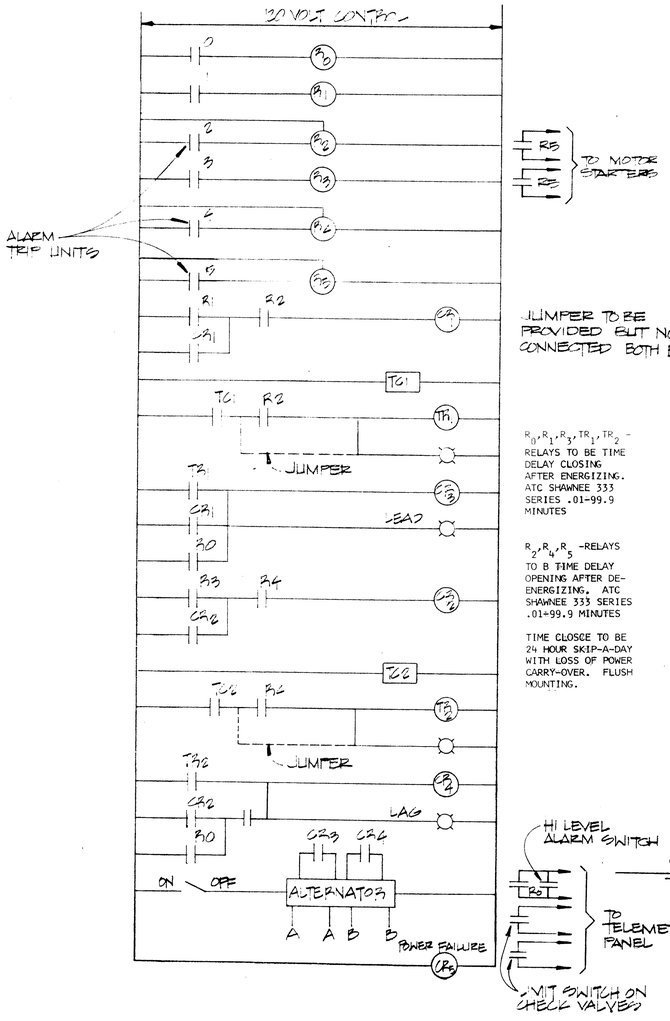

$R_0, R_1, R_3, TR_1, TR_2$ - RELAYS TO BE TIME DELAY CLOSING AFTER ENERGIZING. ATC SHAWNEE 333 SERIES .01-99.9 MINUTES

R_2, R_4, R_5 -RELAYS TO B TIME DELAY OPENING AFTER DE-ENERGIZING. ATC SHAWNEE 333 SERIES .01-99.9 MINUTES

TIME CLOSCE TO BE 24 HOUR SKIP-A-DAY WITH LOSS OF POWER CARRY-OVER. FLUSH MOUNTING.

SCHEMATIC DIAGRAM

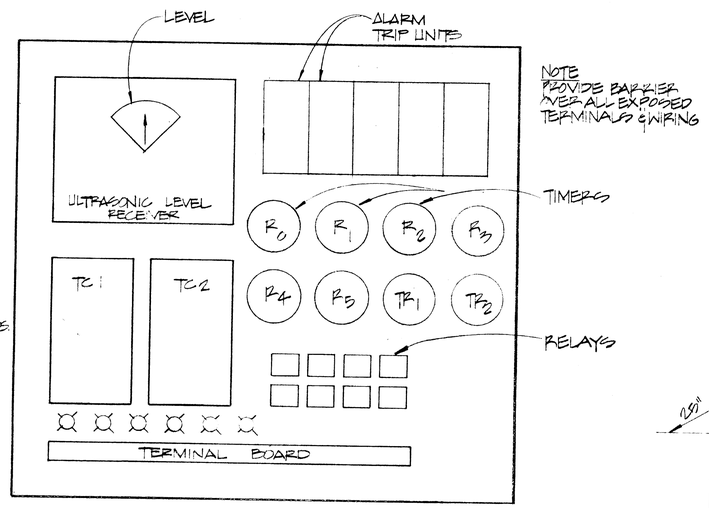

CONTROL PANEL

NO SCALE

DIGITAL SWITCH NO.	FUNCTION	LEVEL
0	HI LEVEL ALARM	34.00
1	START NO. 1	30.17
2	STOP NO. 1	30.00
3	START NO. 2	31.21
4	STOP NO.2	30.17
5	LOW LEVEL CUTOUT	29.50

NOTE:

CONTACT CLOSES WHEN WETWELL LEVEL IS ABOVE SWITCH SET POINT.

SETPOINT LEVEL DESIGNATION

PANEL SCHEDULE: A

BUS: 60 AMP. 120/240 VOLT 1 ϕ 3 W

TYPE: RECESSED MAIN. 30

CIR. NO.	BKR. AMP.	BKR. POLE	DESCRIPTION	LOAD A	LOAD B
1	20	1	LIGHT	100	
3	20	1	TELEMETRY		1500
2	20	1	RECEPTACLE	1500	
4	20	1	CONTROL		400
5	20	1	SPARE		
7	20	1	TELEMETRY	200	
6	20	1	SPARE		
			TOTAL		

TOTAL LOAD _____ KVA MAX. ϕ _____ AMPS

LEGEND

- LIGHTING FIXTURE
- DUPLEX RECEPTACLE 5-20R
- BRANCH CIRCUIT IN CONDUIT CONCEALED IN FLOOR OR UNDERGROUND. CROSSMARKS INDICATE THE NUMBER OF CONDUCTORS (#12 UNLESS INDICATED OTHERWISE) IN CODE SIZE CONDUIT. NO MARKINGS - 2#12 IN 3/4" CONDUIT
- TELEPHONE CONDUIT TO TELEMETRY EQUIPMENT CONCEALED IN FLOOR OR UNDERGROUND 3/4" CONDUIT UNLESS OTHERWISE NOTED. 400# PULL WIRE OR CORD INSTALLED
- WP WEATHERPROOF
- C.O. CONDUIT ONLY
- CR CONTROL RELAY
- TR TIME DELAY RELAY
- INDICATOR LIGHT

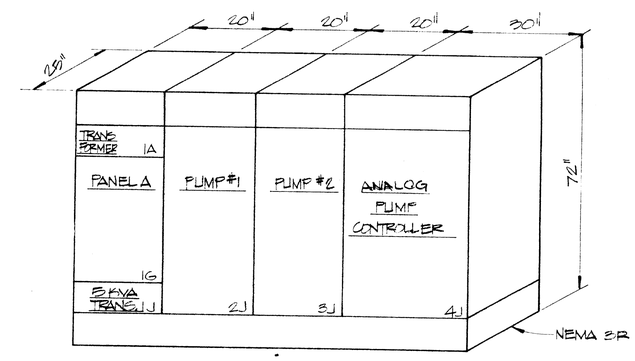

MOTOR CONTROL CENTER

NO SCALE

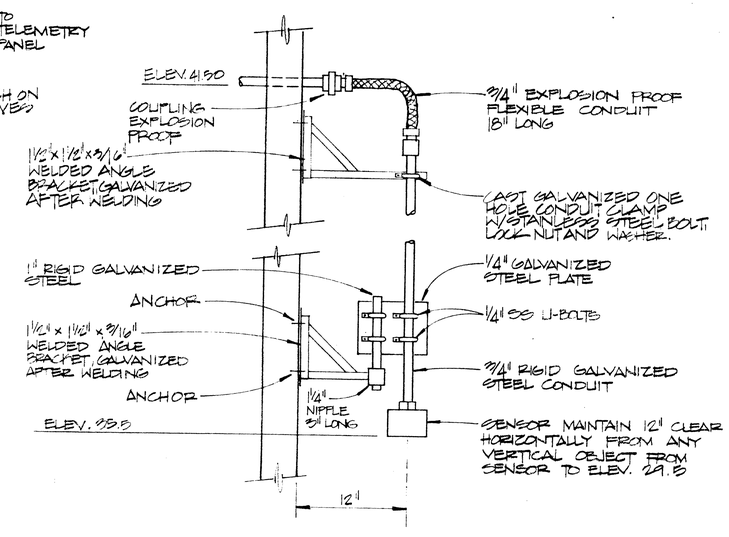

ULTRASONIC SENSOR MOUNTING DETAIL

NOT TO SCALE

RICHARD M TRAINER ENGINEERS INC.
CONSULTING ELECTRICAL & MECHANICAL ENGINEERS
7 ee SAN ANTONIO RD., PALO ALTO, CA 94303 (415) 494-3565

APPROVED BY:		REVIEWED FOR APPROVAL BY:		DESIGNED BY: RMT	DRAWN BY: BG	CHECKED BY: RMT	FIELD BOOK: NO. PG	DATE: 6-2-81
Water System Engineer	Date	ASS'T. CITY ENGINEER	R.E. NO. DATE	TITLE: ELECTRICAL PLAN, SCHEMATIC, LEGEND SANITARY SEWER FORCE MAIN LY-81-1				SHEET 6 OF 17
Traffic Engineer	Date	APPROVED BY:						
Fire	Date							
Engineer Const. Supervisor	Date	DIRECTOR OF PUBLIC WORKS	R.E. NO. DATE	SCALE: AS NOTED Horiz. 1"= Vert. 1"=	DEPARTMENT OF PUBLIC WORKS CITY OF SUNNYVALE			FILE NO.

54288 PRINTED ON NO. 1000H CLEARPRINT

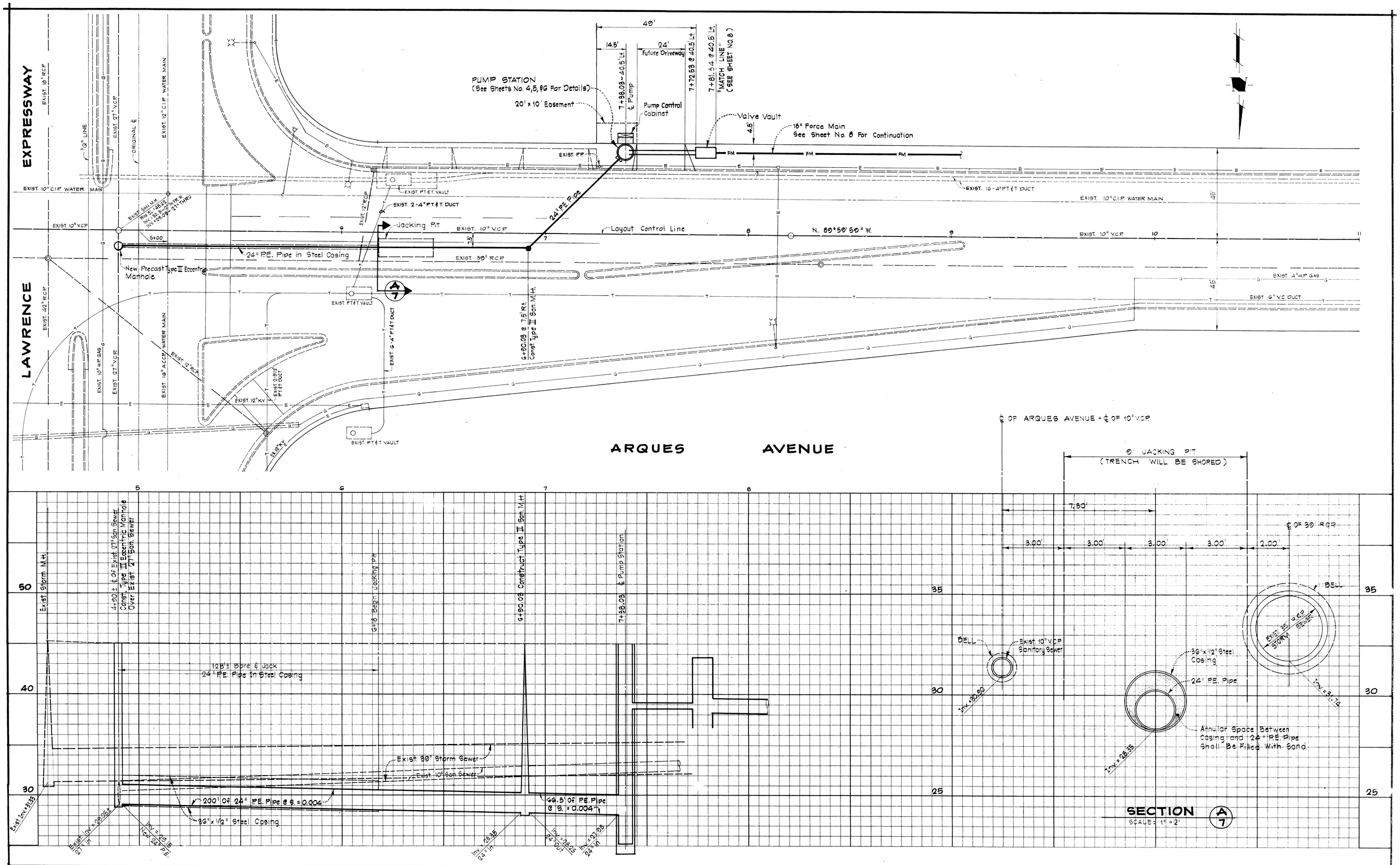

BY	DATE	REVISIONS

Date: May, 1981
Scale: Horz 1"=20', Vert 1"=4'
Designed:
Drawn: J.M.P.
Checked:
Proj. Engr.:

HMH INCORPORATED
Civil Engineers • Planners • Surveyors •
1353 OAKLAND ROAD, SAN JOSE, CALIFORNIA 95112
(408) 294-3232

SANITARY SEWER FORCE MAIN
UY - 81 - 1

Sheet 7 of 17 Sheets

JOB NUMBER 601-81-0

UY-81-1

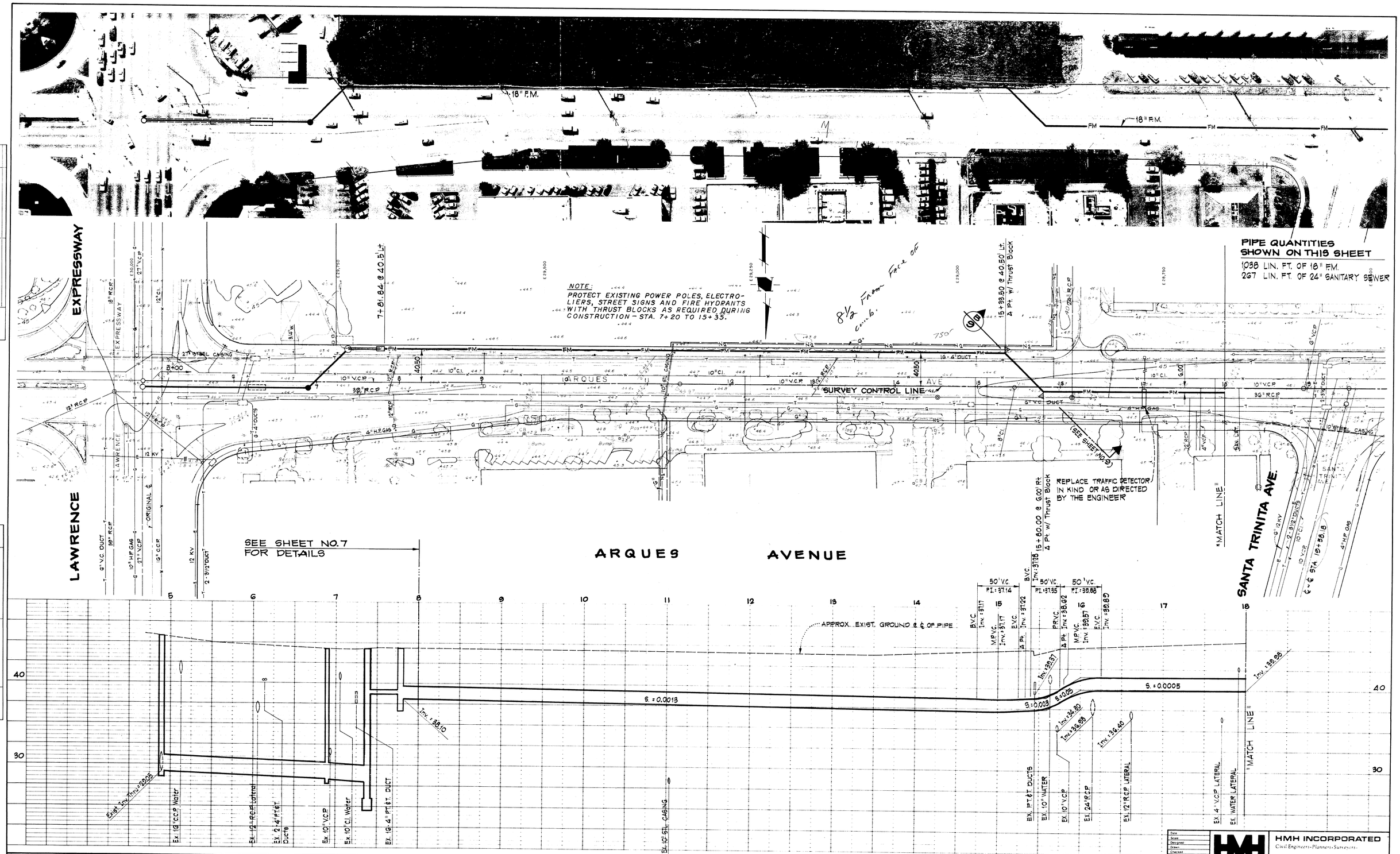

PLAN		
NOTE BOOK NO.	SURVEYED	BY	DATE
	PLOTTED		
	ALIGNMENT CHECKED		
	RT. OF WAY CHECKED		

PROFILE		
NOTE BOOK NO.	SURVEYED	BY	DATE
	PLOTTED		
	GRADES CHECKED		
	B.M. & NOTED		
	STRUCTURE NOTATNS CHK'D		

APPROVED BY:	APPROVED BY:	APPROVED BY:	APPROVED BY:	APPROVED BY:
LIGHTING AND TRAFFIC	FIRE INSPECTOR	WATER SUPERINTENDENT	FIELD ENGINEER	DIRECTOR OF PUBLIC WORKS

DEPARTMENT OF PUBLIC WORKS
CITY OF SUNNYVALE

HMH INCORPORATED
Civil Engineers · Planners · Surveyors
1353 OAKLAND ROAD, SAN JOSE, CALIFORNIA 95112
(408) 294-3232

DESIGNED BY:	DRAWN BY: J.M.P.	CHECKED BY:	FIELD BOOK NO.	DATE May, 1981	8 OF 17
SCALE: HORIZ. 1" = 50' VERT. 1" = 5'	TITLE: SANITARY SEWER FORCE MAIN UY - 81-1				

DATE OF PHOTOGRAPHY 3-24-81
SCALE 1" = 50'/1'
AERO-GEODETIC CORP.
JOB NO. 811824
691-81