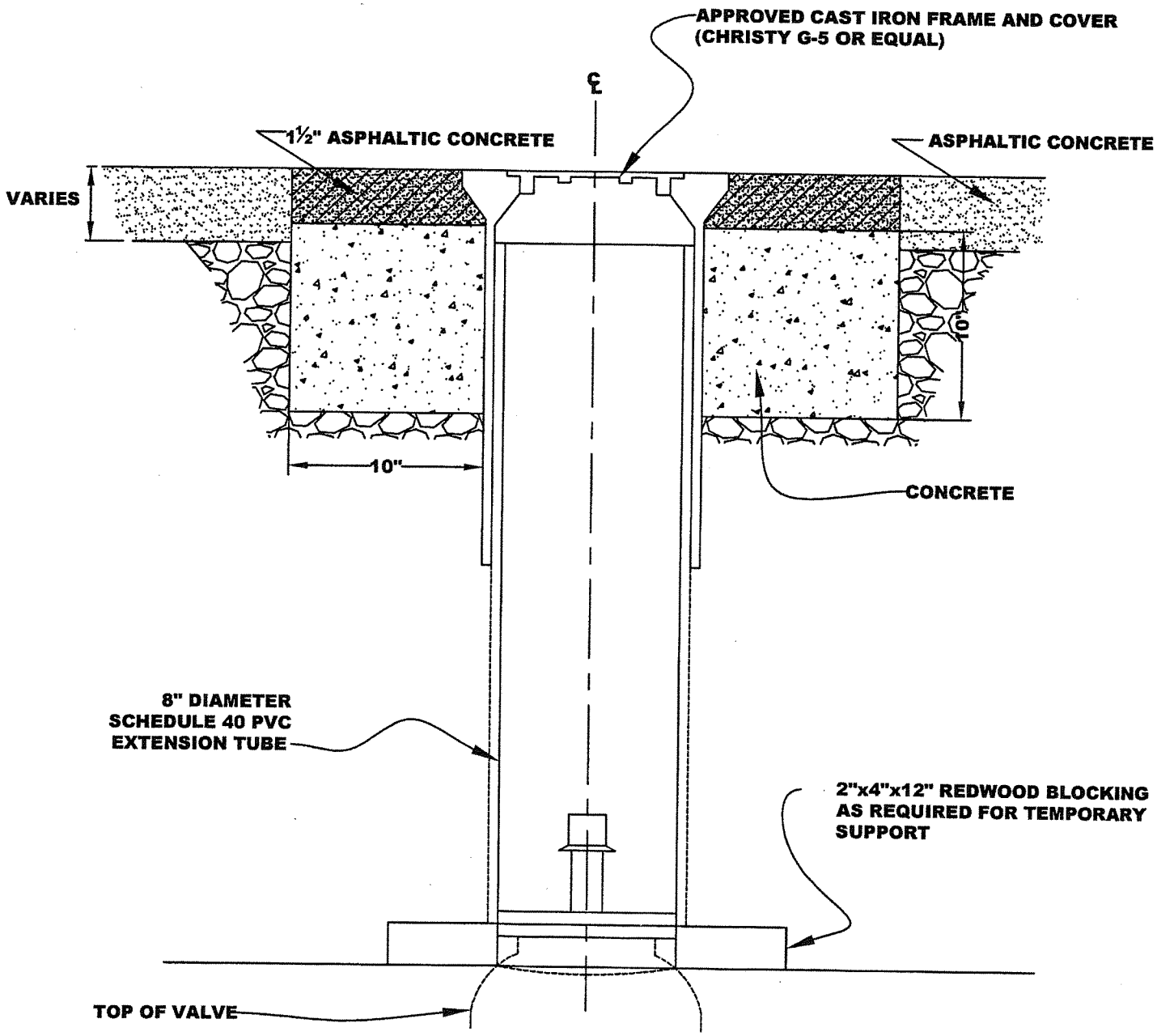

NOTES:

1. PLACE EXTENSION KEY INSIDE VALVE BOX EXTENSION WHEN VALVE KEY DEPTH IS GREATER THAN 10'-0"
2. LID CASTING FOR POTABLE WATER SYSTEM SHALL INCLUDE DESIGNATION "WATER". COVERS MUST BE COMPATIBLE CHRISTY BOX.
3. LID CASTING FOR RECYCLED WATER SYSTEM SHALL INCLUDE DESIGNATION "RECYCLED WATER"

WATER VALVE BOX INSTALLATION	APPROVED BY:	
	DATE : JUNE 30, 2006	DWG. 1B

2006 STANDARD DETAILS

NOTES:

1. EXTRA WIDE MONOLITHIC SIDEWALK
   X = 24" (FACE OF CURB TO CENTER OF HYDRANT) (Y DOES NOT APPLY) PROVIDED MIN CLEAR WIDTH BETWEEN BACK OF HYDRANT AND BACK OF WALK IS 4'-0". IF THIS MIN WIDTH CANNOT BE ACHIEVED, SEE NOTE 3.
2.. NON MONOLITHIC SIDEWALK
   X = 24" (FACE OF CURB TO CENTER OF HYDRANT) (Y DOES NOT APPLY)
3. MONOLITHIC SIDEWALK
   Y = 12" (BACK OF SIDEWALK TO CENTER OF HYDRANT) (X DOES NOT APPLY)
4. NO SIDEWALK
   X = 6'-6" (FACE OF CURB TO CENTER OF HYDRANT) (Y DOES NOT APPLY)

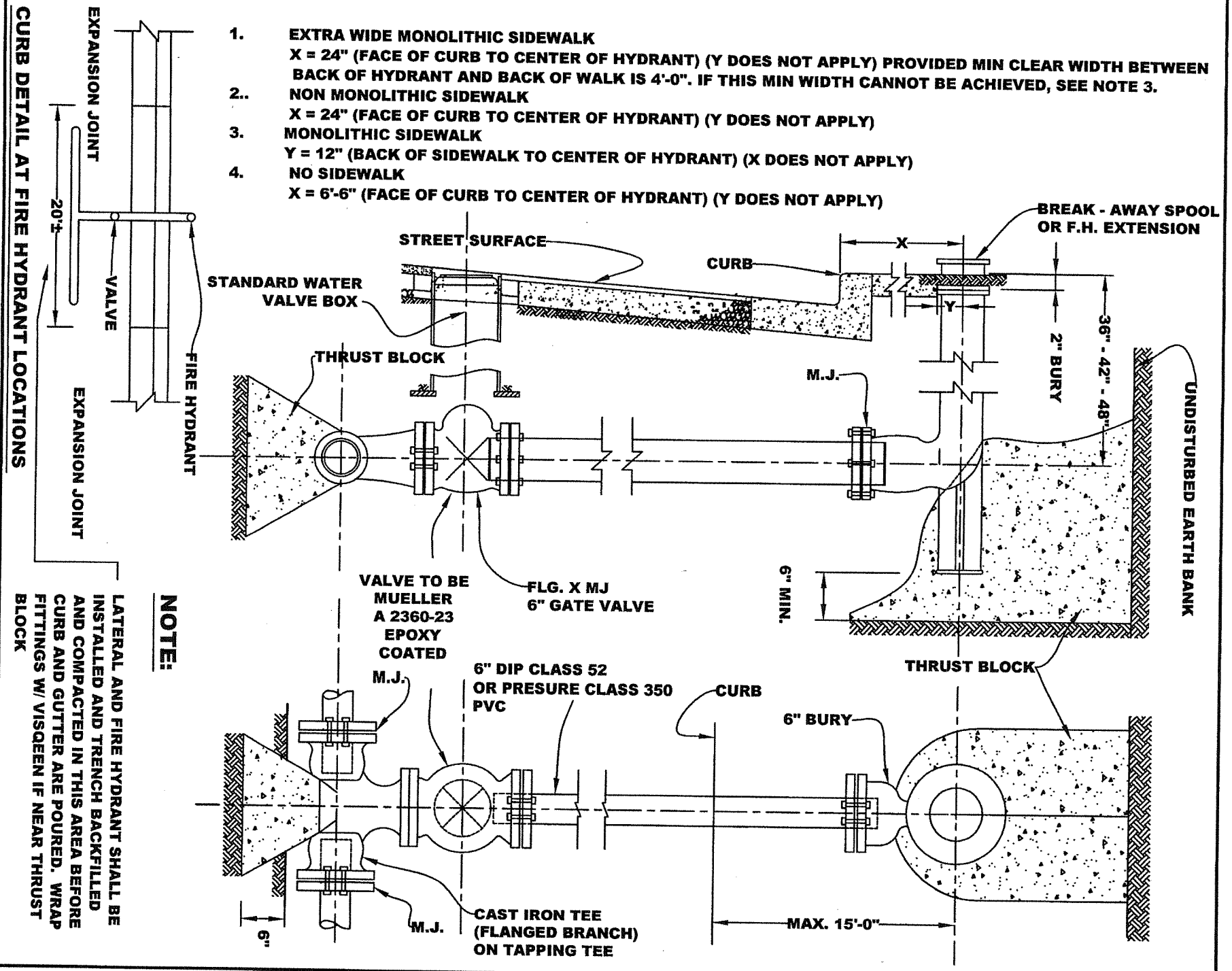

NOTE:

LATERAL AND FIRE HYDRANT SHALL BE INSTALLED AND TRENCH BACKFILLED AND COMPACTED IN THIS AREA BEFORE CURB AND GUTTER ARE POURED. WRAP FITTINGS W/ VISQEEN IF NEAR THRUST BLOCK

FIRE HYDRANT ASSEMBLY

DATE : JUNE 30, 2006

DWG. 2B

APPROVED BY:

2006 STANDARD DETAILS

HYDRANT LOCATIONS

REFER TO DETAIL 2B

(3) HYDRANT REQUIREMENTS

CLOW/RICH NO. 75

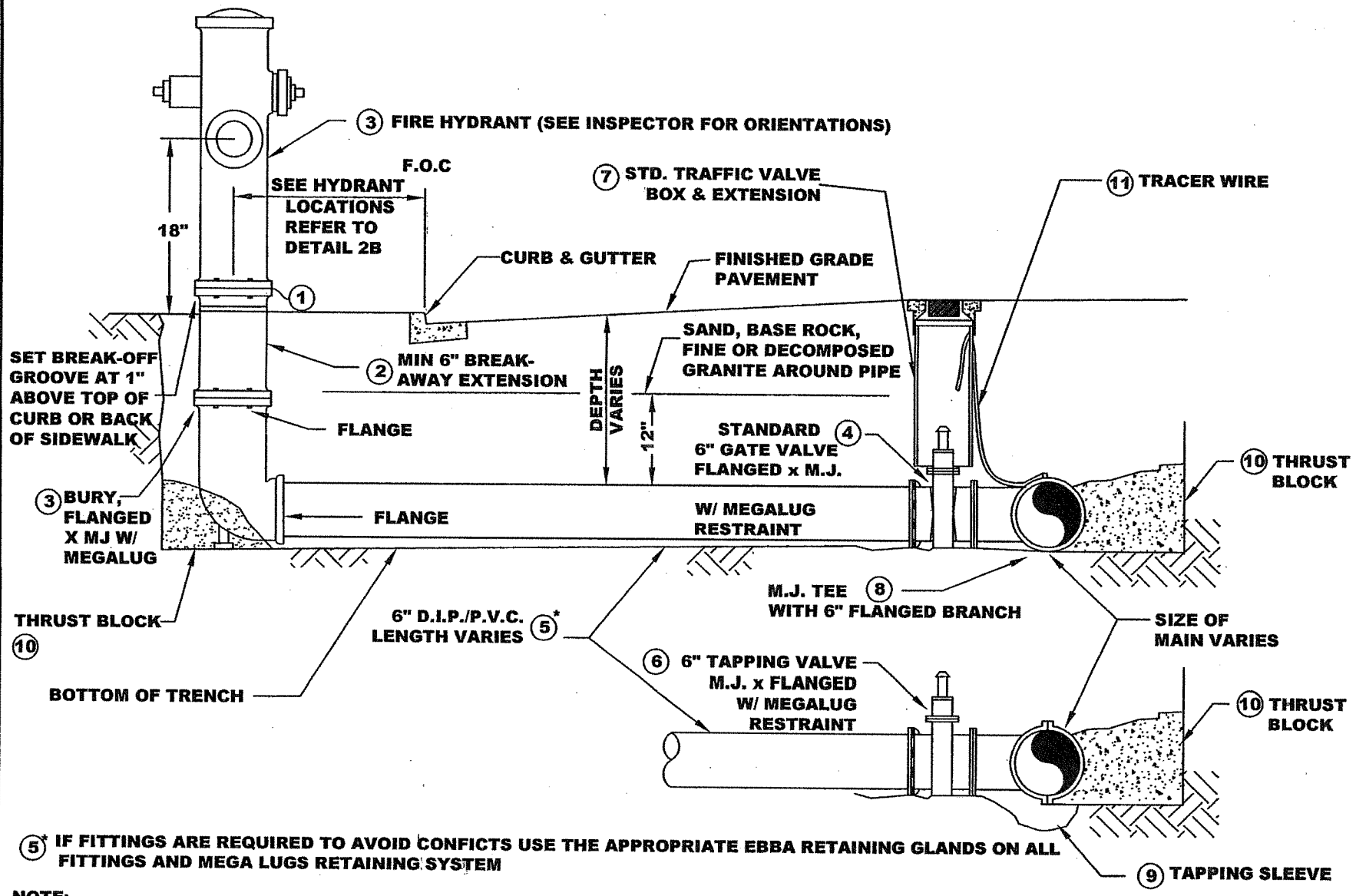

(5)* IF FITTINGS ARE REQUIRED TO AVOID CONFICTS USE THE APPROPRIATE EBBA RETAINING GLANDS ON ALL FITTINGS AND MEGA LUGS RETAINING SYSTEM

NOTE:

1. USE BREAK-OFF BOLTS FOR STANDARD F.H. INSTALLATION AT F.H. FLANGE TO EXTENSION CONNECTION ONLY.
2. IF BREAK-OFF VALVE REQUIRED PER PLANS DO NOT USE BREAK-OFF BOLTS.
3. INSTALL BOLTS UP; NUTS DOWN
4. FOR HYDRANT MARKER LOCATION, SEE DETAIL 2E-1

HYDRANT LOCATION INFORMATION

DATE : JUNE 30, 2006
REVISED : JUNE, 2007

DWG. 2B-2

APPROVED BY:

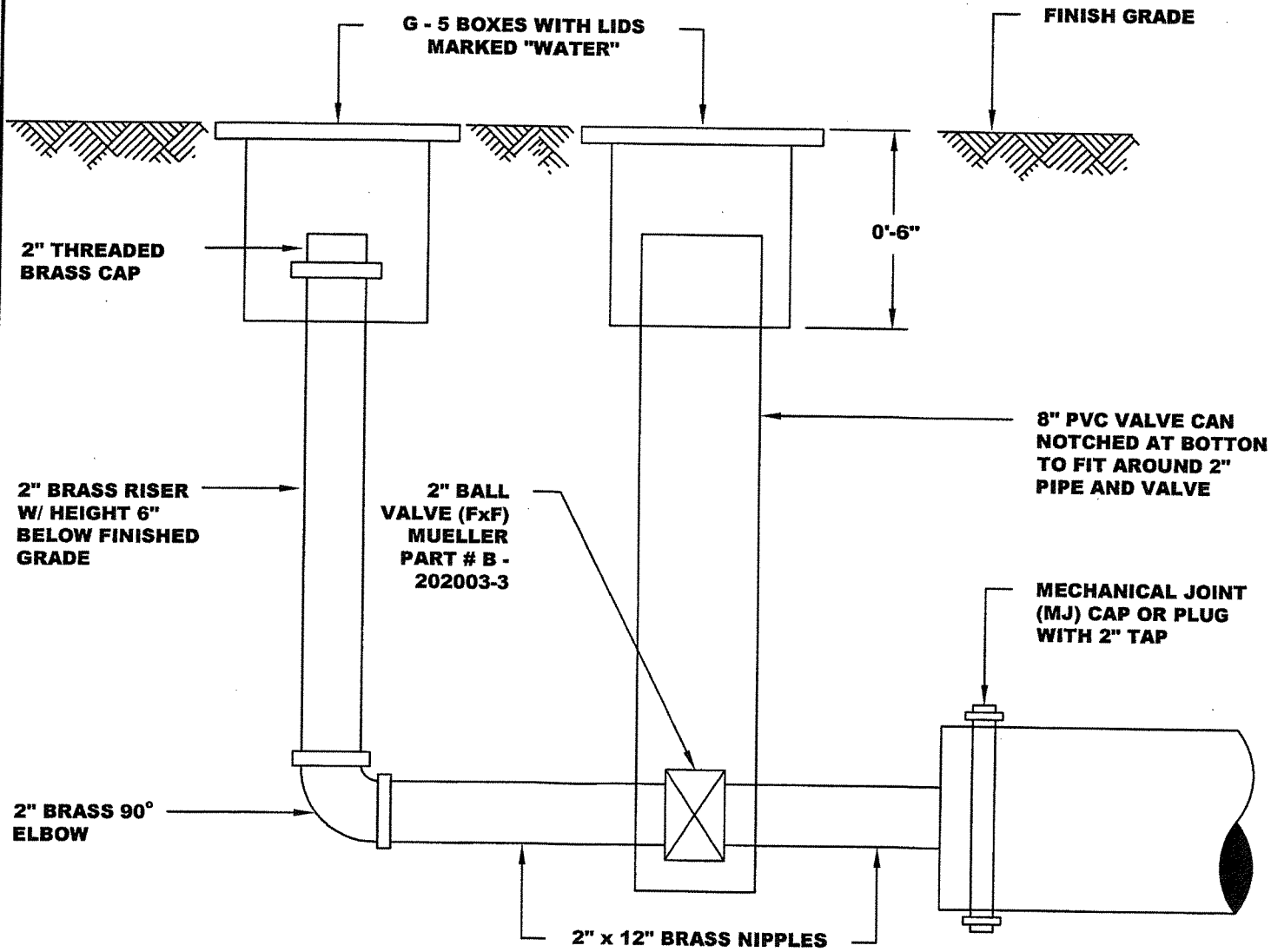

NOTES:

1. BLOW-OFF ASSEMBLY AND END OF WATER MAIN MUST HAVE A KICKER / THRUST BLOCK INSTALLED

STANDARD BLOW OFF	APPROVED BY:	
	DATE : JUNE 30, 2006	DWG. 3B

2006 STANDARD DETAILS

STANDARD AIR-RELIEF VALVES 1" & 2"

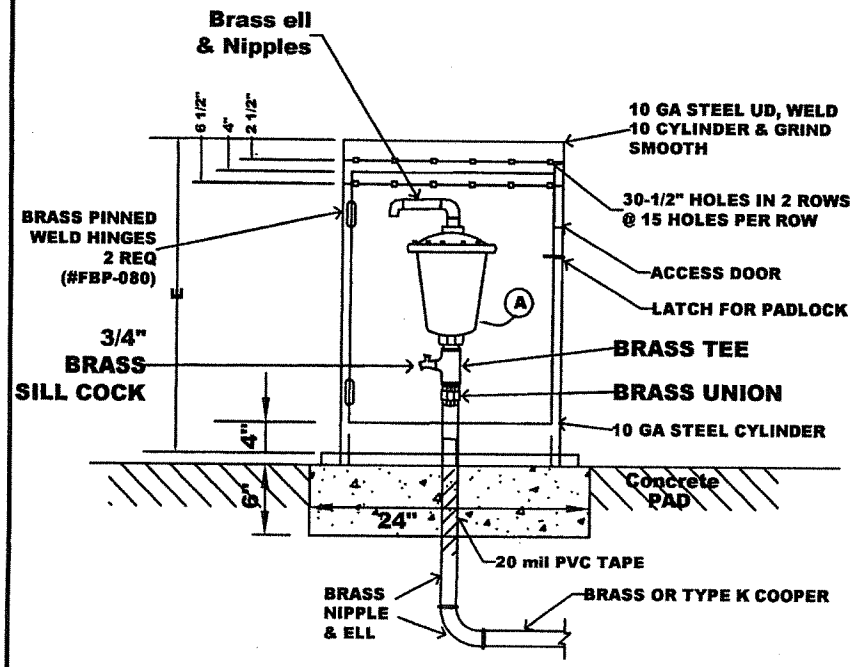

ELEVATION

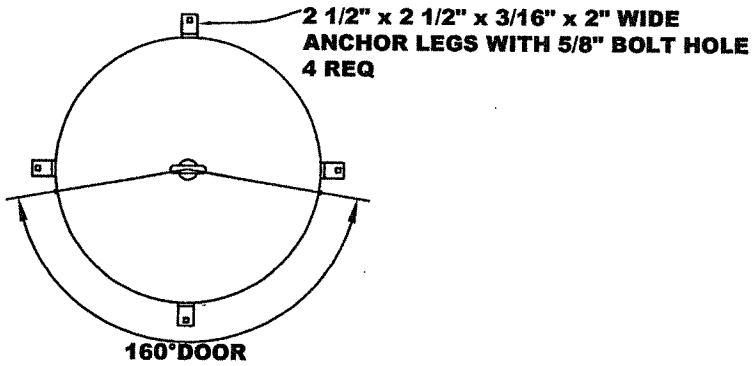

PLAN

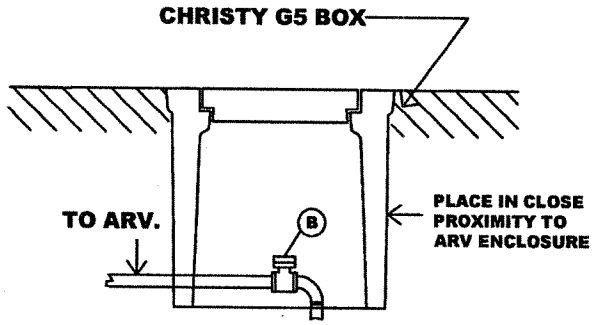

MATERIAL

THE TYPE "K" COPPER TUBING SHALL AT ALL POINTS BE RISING FROM THE CORPORATION STOP TO THE AIR & VACUUM RELIEF VALVE.

(A) CRISPIN UNIVERSAL AIR & VACUUM RELIEF VALVE

(B) MUELLER BALL VALVE / B202000 OR FORD EQUIV.

NOTES:

1. CONNECTION TO WATER MAIN SHALL CONFORM TO STANDARD DETAILS AND SPECIFICATIONS.
2. USE SAME DIAMETER SEAMLESS COPPER TUBING AS REQUIRED SIZE OF AIR & VACUUM RELIEF VALVE.
3. AIR RELIEF VALVE AND CURB STOP SHALL BE PLACED IN BOX SUCH THAT THE WALL OF THE BOX WILL NOT INTERFERE WITH THE INSTALLATION AND REMOVAL OF THE VALVES.

NOTES:

1. PIPELINE PRODUCTS PART #VC316D
2. POWDER COATED DARK GREEN
3. ANY DEVIATION FROM STANDARD DETAILS MUST BE APPROVED BY PUBLIC WORKS / FIELD SERVICES / SENIOR LEADER

SIZING FOR AIR VALVE COVER

VALVE SIZE	A (DIAMETER)	B (HEIGHT)	PART #
1" & 2"	18"	30"	VC-316

AUTOMATIC AIR & VACUUM VALVE

DATE : JUNE 30, 2006
REVISED : APRIL, 2007

APPROVED BY:

DWG. 3B-1

2006 STANDARD DETAILS

WATER SERVICE CONNECTION FOR METER SIZES 1" 1-1/2" AND 2"

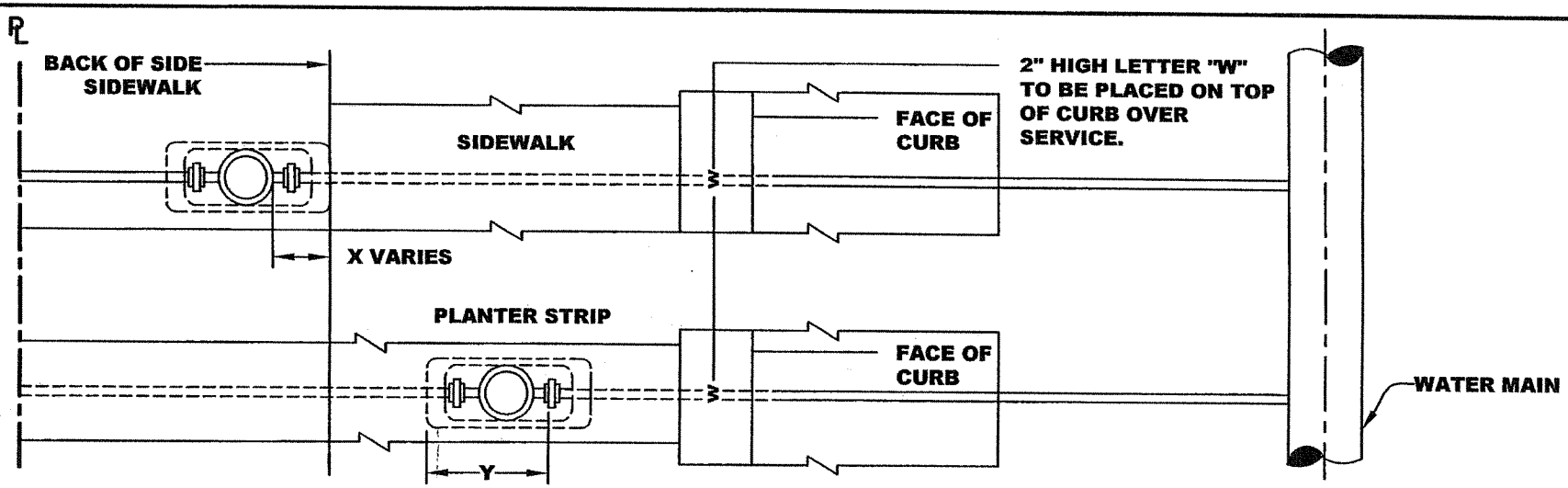

***NOTE:** ALL SERVICE CONNECTIONS LARGER THAN 1" TO CAST IRON OR DUCTILE IRON MAINS REQUIRE THE INSTALLATION OF DOUBLE STRAP BRONZE SADDLES WITH MUELLER THREAD. ALL SERVICE CONNECTIONS TO EXISTING ASBESTOS CEMENT PIPE REQUIRE DOUBLE STRAP BRONZE SADDLES.

FOR SITUATIONS WHERE THERE IS INSUFFICIENT ROOM BETWEEN BACK OF SIDEWALK AND PROPERTY LINE, INSTALL METER BOX IN SIDEWALK AS DIRECTED BY ENGINEER.

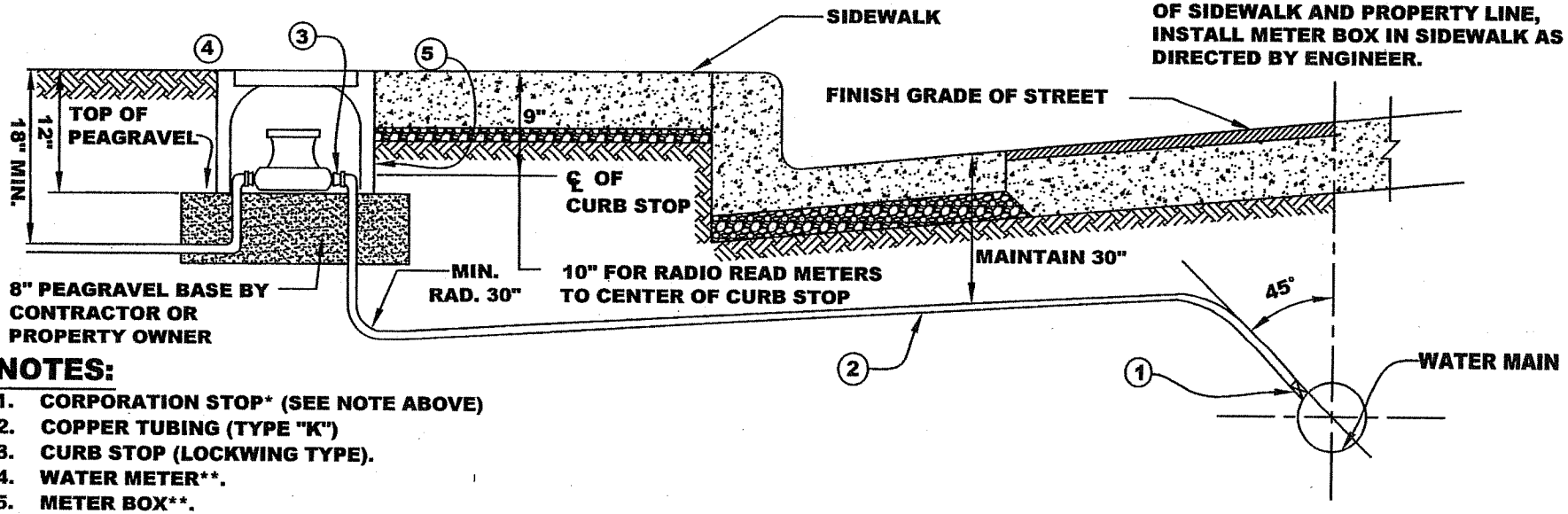

NOTES:

1. CORPORATION STOP* (SEE NOTE ABOVE)
2. COPPER TUBING (TYPE "K")
3. CURB STOP (LOCKWING TYPE).
4. WATER METER**.
5. METER BOX**.
6. EXCAVATE FOR METER BOX AND PLACE PEAGRAVEL BASE BEFORE CITY INSTALLATION OF METER BOX.
7. FOR MONOLITHIC OR NO SIDEWALK LOCATIONS USE DETAIL WITH "X" DIMENSION. FOR NON-MONOLITHIC SIDEWALK, USE DETAIL WITH "Y" DIMENSION.
8. CITY WILL PERFORM LIVE TAP AND WILL FURNISH AND INSTALL METER AND BOX UPON PAYMENT OF FEE.
9. NEW 1" TAP REQUIRED FOR ALL 1" METER UPGRADES. CONTACT FIELD SERVICES FOR EXISTING SERVICE LINE INFORMATION.

METER SIZE	-	-	1"	1-1/2"	2"
X **	-	-	7"	7"	9"
Y	-	-	17"	20"	26"
METER BOX EXCAV.					
SIZE (WxL) (in x in)	(18x24)	(18x24)	(20x30)	(20x30)	(24x36)

** WHERE NO SIDEWALK, MEASURE "X" FROM BACK OF CURB

DATE : JUNE 30, 2006
REVISED : JUNE, 2007

DWG. 4B

APPROVED BY:

2006 STANDARD DETAILS

METER BOX AND VAULT SPECIFICATIONS

1. Small meters (note 12B in standard specifications book)
   a. Armorcast 15-1/2" X 25" for 1" meters
   b. Armorcast 18" X 27-1/2" for 1-1/2" meters
   c. Armorcast 22" X 35" for 2" meters

2. Compound meters (note 12B in standard specifications book)
   a. 3" compound 4' X 6'
   b. 4" compound 4' X 6'
   c. 6" compound 4' X 6'

3. FM Meters
   a. 4" FMCT 4' X 6'
   b. 6" FMCT 4' X 6'
   c. 8" FMCT 4' X 6'
   d. 10" FMCT 5' X 6'

Size Meter	Meter Type	Meter Length
1"		10-3/4"
1-1/2"		13"
1-1/2"	Turbine with strainer	13"
2"		17"
2"	Turbine with strainer	17"
3"		24"
3"	Turbine with strainer	18"
4"		29"
4"	Turbine with strainer	21-1/2"
6"		36-1/2"
6"	Turbine with strainer	27"
8"	Turbine with strainer	30"
4" x 2"	MFM	33"
6" x 3"	MFM	45"
8" x 4"	MFM	53"

FIRE SERVICE LOOP WITH SEPERATE DOMESTIC SERVICE

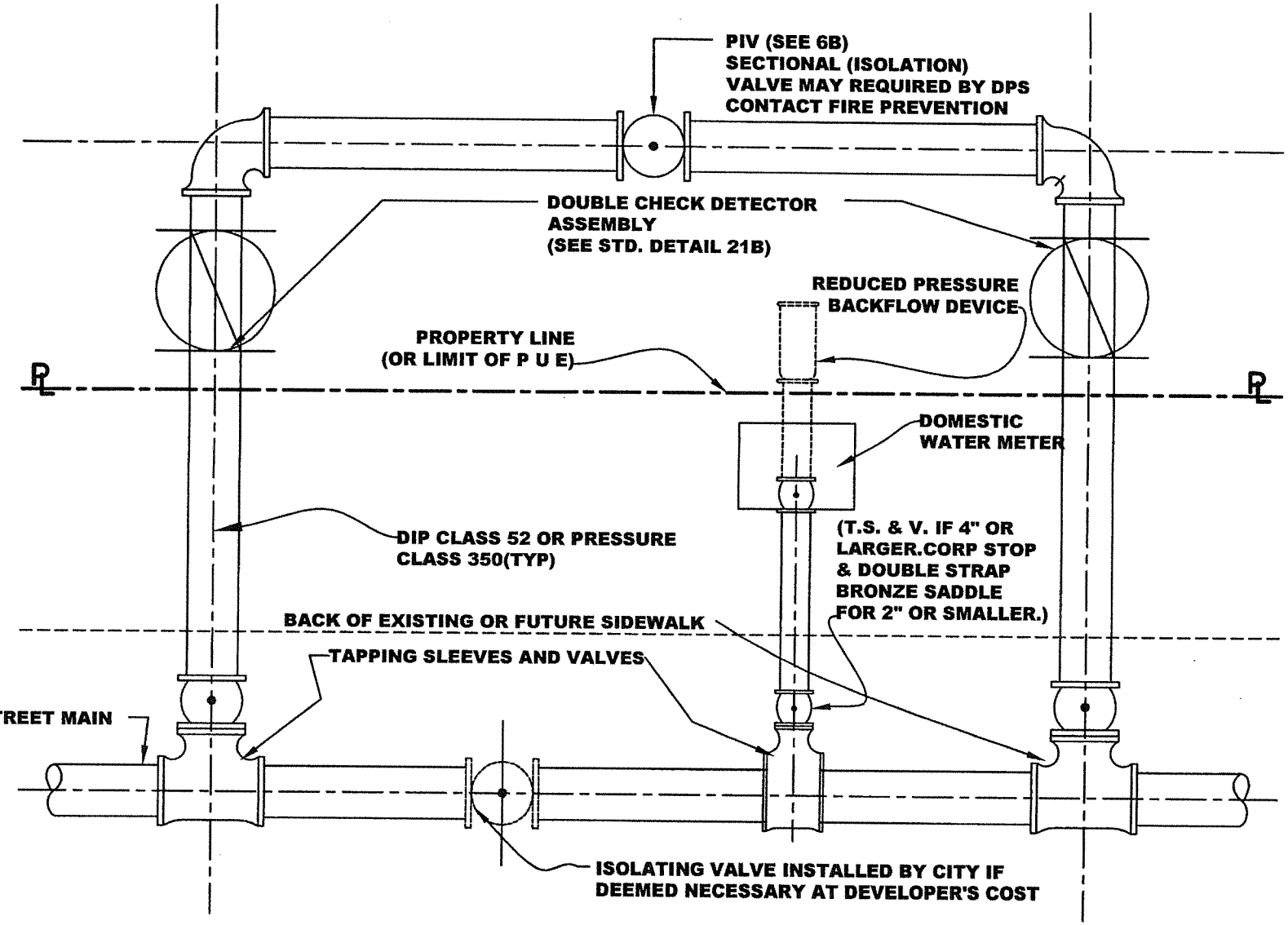

NOTE:

AN APPROVED BACKFLOW DEVICE REQUIRED ON THE FIRE LOOP AND ON THE DOMESTIC SYSTEM

DATE: JUNE 30, 2006

APPROVED BY:

5B

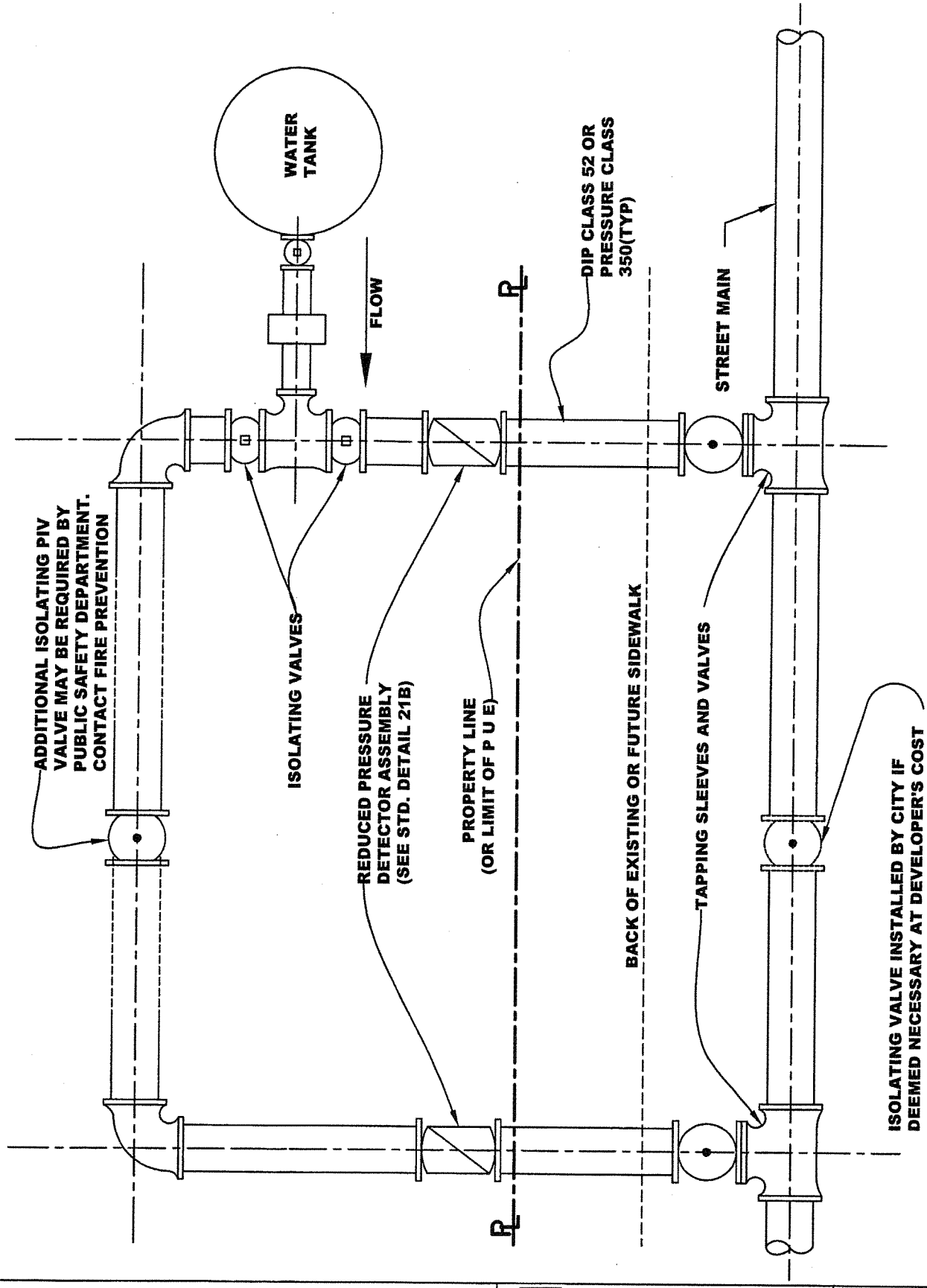

FIRE SERVICE LOOP WITH FIRE PUMP AND TANK

APPROVED BY:

DATE: JUNE 30, 2006

6B

2006 STANDARD DETAILS

FIRE AND DOMESTIC SERVICE FROM A SINGLE CONNECTION

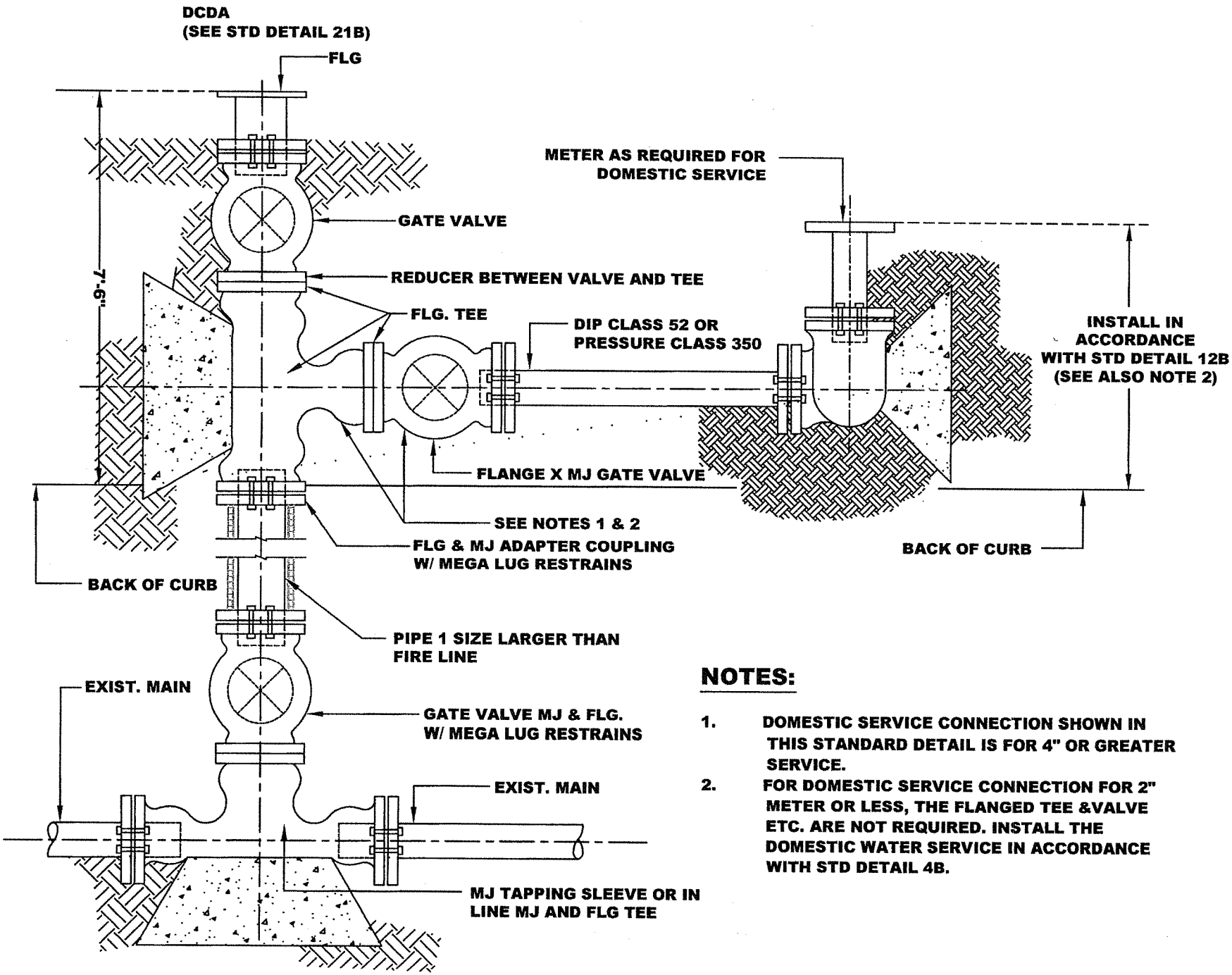

NOTES:

1. DOMESTIC SERVICE CONNECTION SHOWN IN THIS STANDARD DETAIL IS FOR 4" OR GREATER SERVICE.
2. FOR DOMESTIC SERVICE CONNECTION FOR 2" METER OR LESS, THE FLANGED TEE &VALVE ETC. ARE NOT REQUIRED. INSTALL THE DOMESTIC WATER SERVICE IN ACCORDANCE WITH STD DETAIL 4B.

(APPROVAL OF CITY ENGINEER REQUIRED)

DATE: JUNE 30, 2006
REVISED: SEPT, 2006

APPROVED BY:

8B

FIRE AND DOMESTIC COMBINED SERVICE LOOP SYSTEM

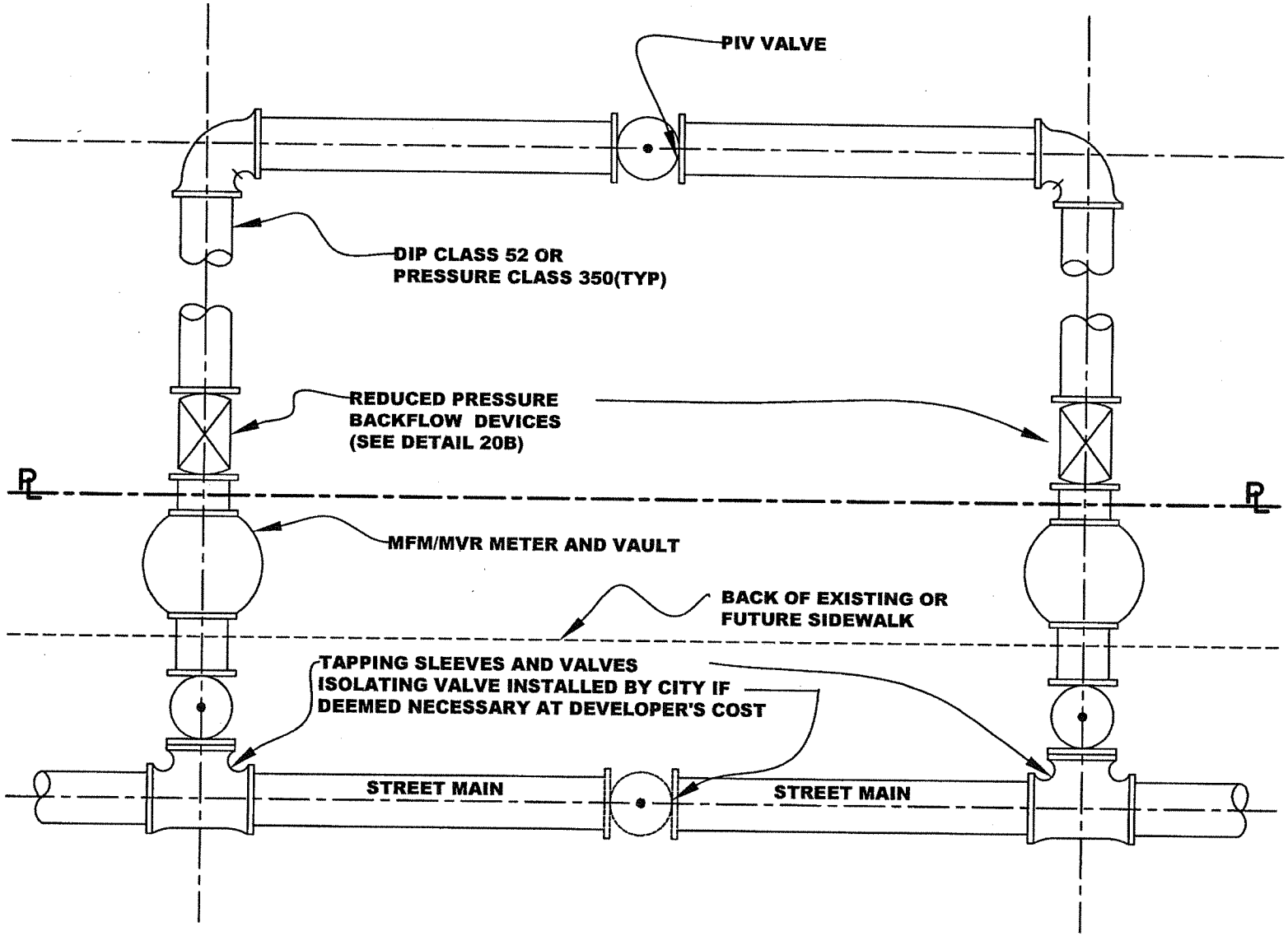

NOTES:

1. BACKFLOW DEVICE MUST BE SAME SIZE AS PIPE IN LOOPED SYSTEM.
2. MFM/MVR METER SHALL BE SAME SIZE AS LOOPED SYSTEM OR AS OTHERWISE APPROVED BY CITY ENGINEER.

DATE: JUNE 30, 2006

APPROVED BY:

10B

WATER SERVICE INSTALLATION
3" THROUGH 10" METERS

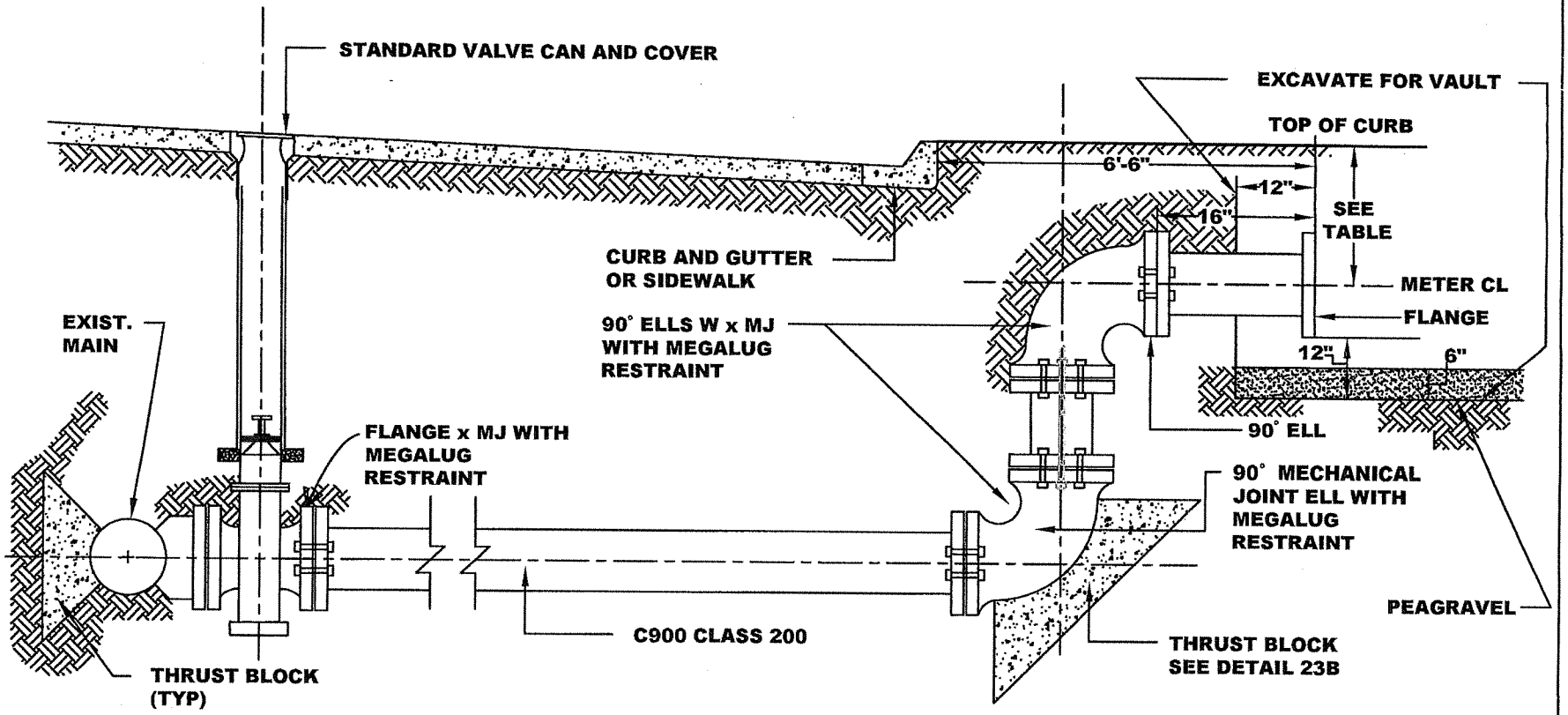

NOTES:

1. VAULTS WILL BE SET IN PUBLIC RIGHT - OF - WAY.
2. WHERE MOUND LANDSCAPING IS USED, A RETAINING WALL SHALL BE CONSTRUCTED IN ORDER TO KEEP VAULT LEVEL WITH TOP OF CURB.
3. AN EXCAVATED HOLE, COMPLETE WITH PEAGRAVEL BASE AND IN ACCORDANCE WITH THESE DETAILS, SHALL BE PROVIDED PRIOR TO CITY INSTALLATION OF VAULT, METER AND APPURTENANCES.

SERVICE SIZE	WATER METER		VAULT SIZE
	TOP OF CURB TO CENTERLINE	EXCAVATION SIZE LxW	
4" ** (3" METER)	26"	5'x6'	30"x48"x32" DEEP
4" ** (4" METER)	28"	6'x7'	48"x60"x32" DEEP
6" ** (6" METER)	28"	6'x7'	48"x60"x32" DEEP
8" & 10" *	*	*	*

* CALL FIELD SERVICES FOR DETAILS
** CALL FIELD SERVICES IF LOOPED SYSTEM

DATE : JUNE 30, 2006
REVISED : MARCH, 2008

APPROVED BY:

12B

TWO METER MANIFOLD SERVICE

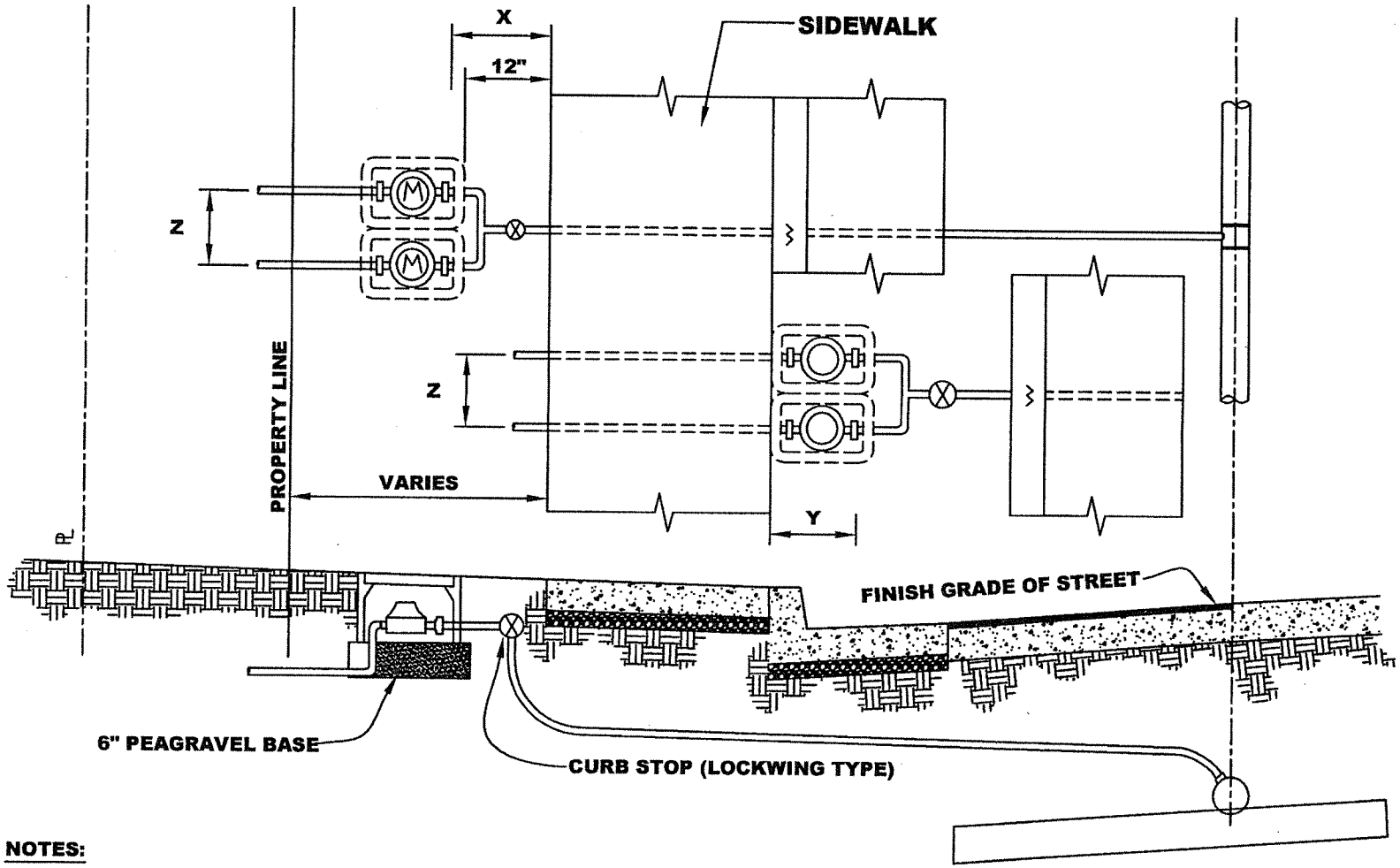

NOTES:

1. MANIFOLD SERVICE CAN BE USED IN LIEU OF INDIVIDUAL SERVICE LATERALS FROM THE STREET MAIN.
2. THIS DETAIL, FOR DOMESTIC OR IRRIGATION METER CONNECTIONS, MAY BE COMBINED WITH FIRE SERVICE. SEE STANDARD DETAIL 8B.
3. FOR MONOLOTHIC OR NO SIDEWALK LOCATIONS USE DETAIL WITH "X" DIMENSION. FOR NON-MONOLITHIC SIDEWALK, USE DETAIL WITH "Y" DIMENSION.
4. MATERIAL - MANIFOLD, NIPPLES, AND FITTINGS SHALL BE COPPER OR BRASS. COPPER PIPE CONNECTION TO BE COMPRESSION TYPE.
5. FOR FURTHER DETAILS, SEE STANDARD DETAIL 4B.

METER SIZE	5/8"	3/4"	1"	1 1/2"	2"
X	18"	18"	19"	19"	21"
Y	14"	14"	17"	20"	26"
Z	18"	18"	18"	24"	24"
EXCAV. SIZE (WxL) (in x in)	36x24	36x24	46x30	54x30	64x36

DATE : JUNE 30, 2006

DWG. 13B

APPROVED BY:

MANIFOLD SERVICE
3 OR MORE METERS

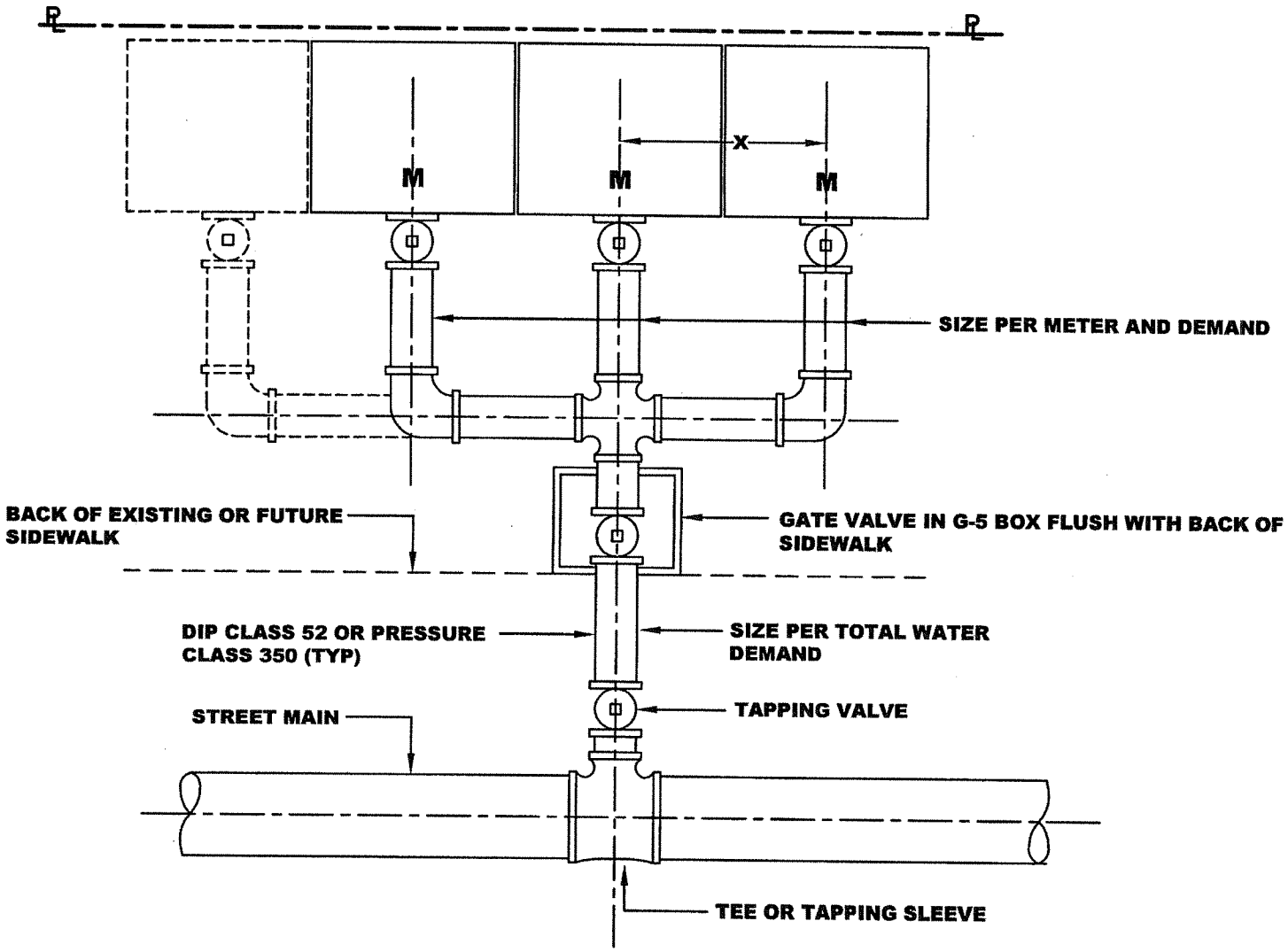

NOTES:

1. MANIFOLD SERVICE CAN BE USED IN LIEU OF A NUMBER OF INDUVIDUAL SERVICE LATERALS FROM THE STREET MAIN.
2. THIS DETAIL FOR DOMESTIC OR IRRIGATION METER CONNECTIONS MAY BE COMBINED WITH FIRE SERVICE, SEE STANDARD DETAIL 8B.
3. EACH METER CONNECTION MUST HAVE A CURB STOP BEFORE EACH METER.
4. MATERIAL - MANIFOLD, NIPPLES, AND FITTINGS SHALL BE COPPER OR BRASS. COPPER PIPE CONNECTION TO BE COMPRESSION TYPE.
5. FOR AN ALTERNATIVE PIPE ARRANGEMENT, SEE STD. DETAIL 14B - 1.
6. FOR FURTHER DETAILS, SEE STANDARD DETAIL 4B.

METER SIZE	1"	$1\frac{1}{2}$"	2"
X	18"	24"	24"
MIN. EXCAV. LENGTH FOR METER BOX (IN)	30"	30"	36"
EXCAV. WIDTH (IN)	[(SUM OF "X") + X + 6"]		

DATE : JUNE 30, 2006
REVISED : APRIL, 2007

APPROVED BY:

14B

2006 STANDARD DETAILS

MANIFOLD SERVICE 3 OR MORE METERS
(ALTERNATIVE PIPE ARRANGEMENT)

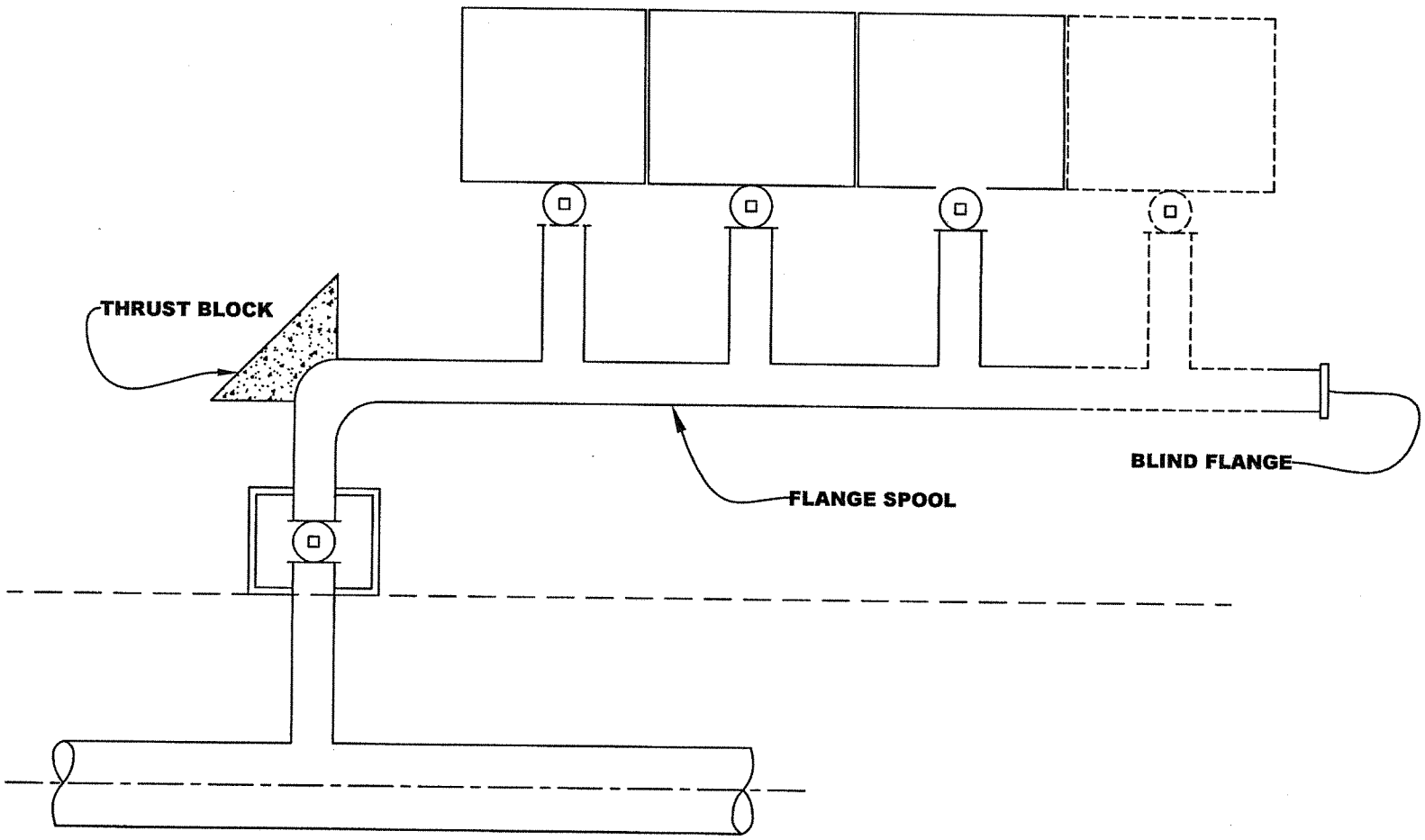

NOTES:

1. THIS IS AN ALTERNATIVE PIPE ARRANGEMENT TO THAT SHOWN ON STANDARD DETAIL 14B.
2. FOR FURTHER DETAILS, REFER TO STANDARD DETAIL 14B.

DATE: JUNE 30, 2006

APPROVED BY:

14B-1

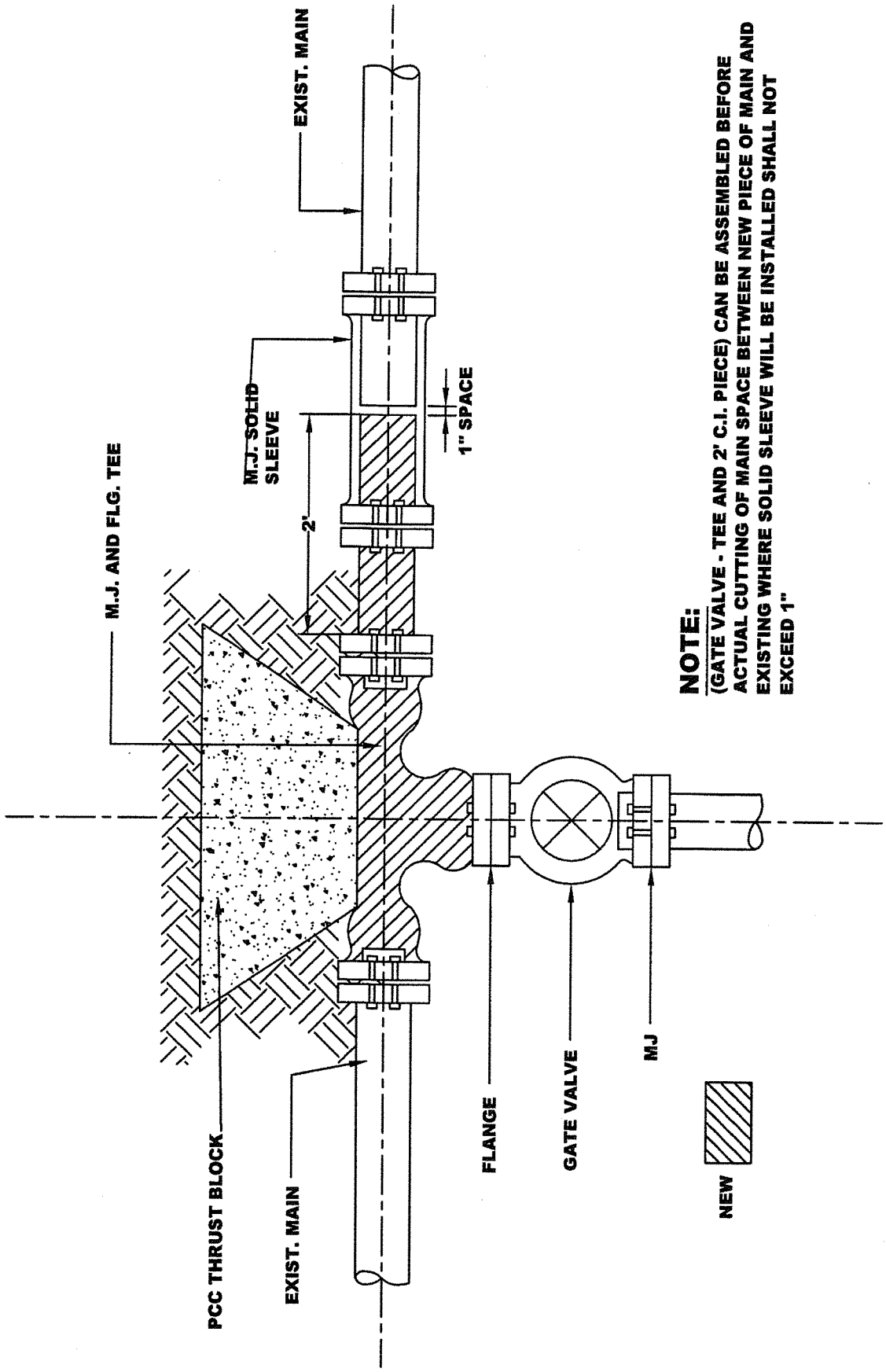

NOTE:
(GATE VALVE - TEE AND 2' C.I. PIECE) CAN BE ASSEMBLED BEFORE ACTUAL CUTTING OF MAIN SPACE BETWEEN NEW PIECE OF MAIN AND EXISTING WHERE SOLID SLEEVE WILL BE INSTALLED SHALL NOT EXCEED 1"

INSTALLATION OF CUT - IN TEE AND GATE VALVE

APPROVED BY:

DATE : JUNE 30, 2006
REVISED : APRIL, 2007

15B

2006 STANDARD DETAILS

THRUST BLOCK FOR HORIZONTAL BENDS

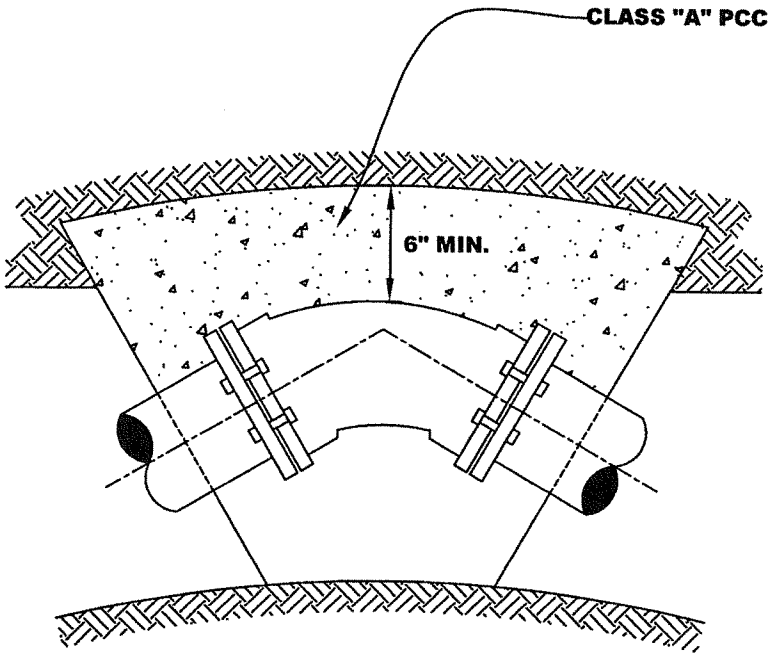

PLAN

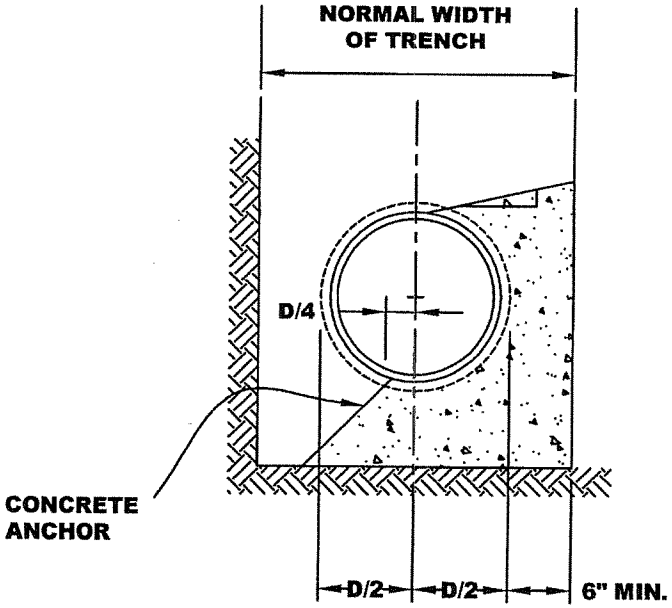

SECTION

NOTES:

1. D = PIPE DIAMETER
2. WRAP FLANGES/BOLTS IN VISQUEEN

DATE: JUNE 30, 2006

APPROVED BY:

DWG. 16B

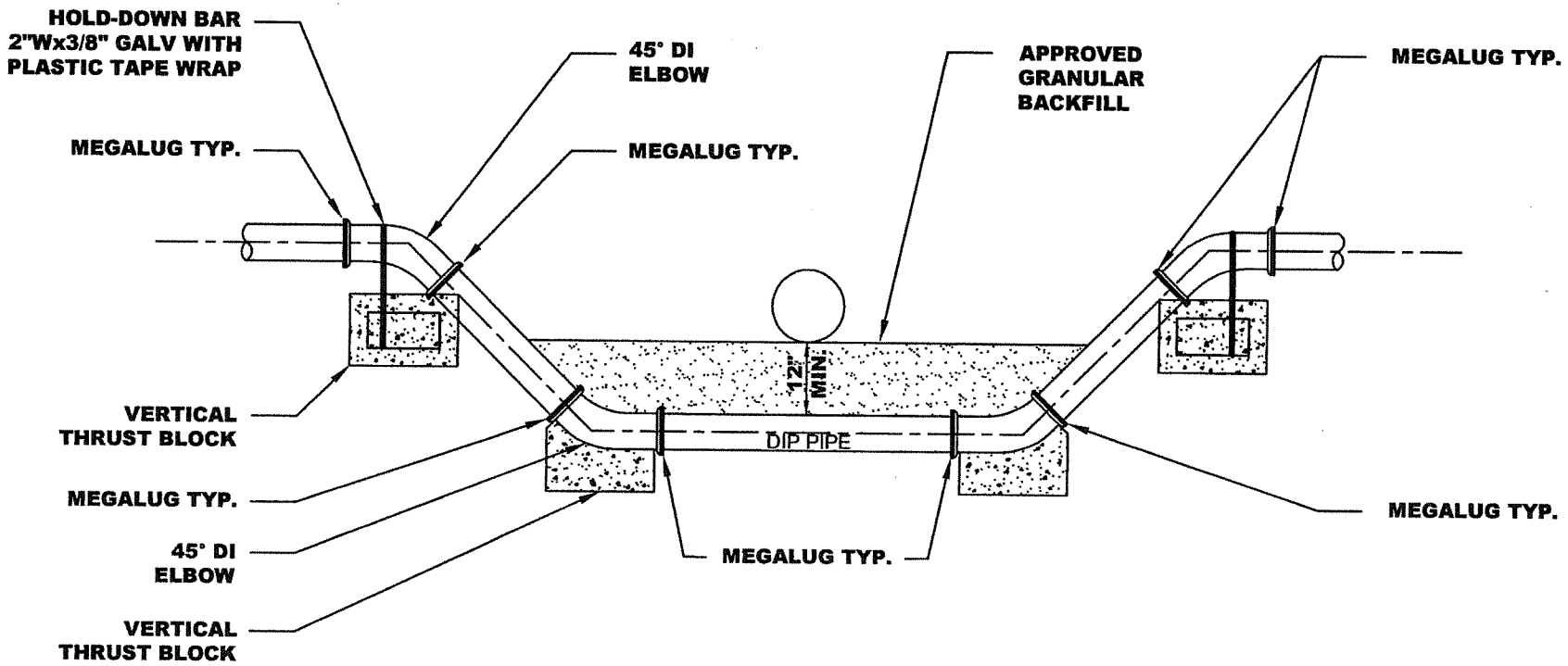

WATER LINE VERTICAL OFFSET

NOT TO SCALE

NOTE: ALL FITTINGS TO BE MJ x MJ WITH MEGALUG RESTRAINTS
TRUST BLOCK DIMENSIONS PER ENGINEER OR TABLE 17B1

WATER LINE VERTICAL OFFSET

DATE : JUNE 30, 2006

DWG. 17B

APPROVED BY:

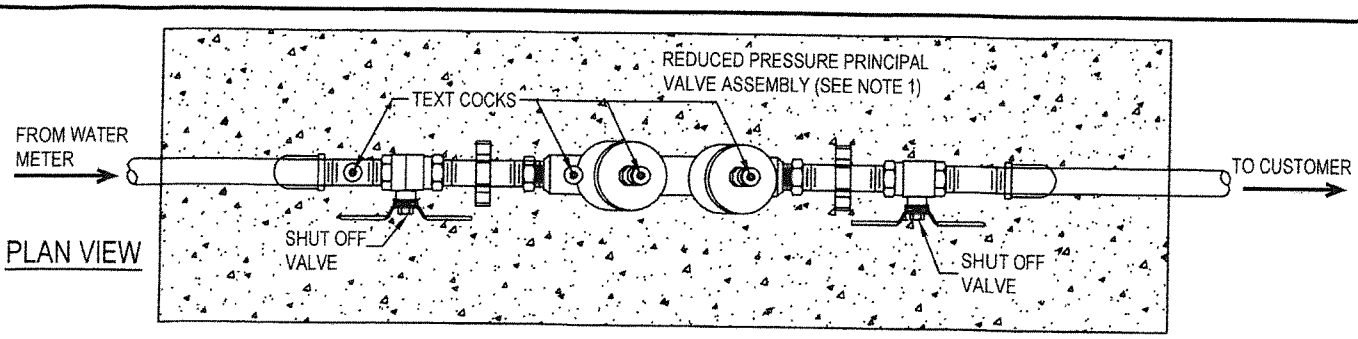

PLAN VIEW

NOTE:

FOR DOMESTIC AND IRRIGATION SERVICE (FOR NON-SINGLE FAMILY HOMES)

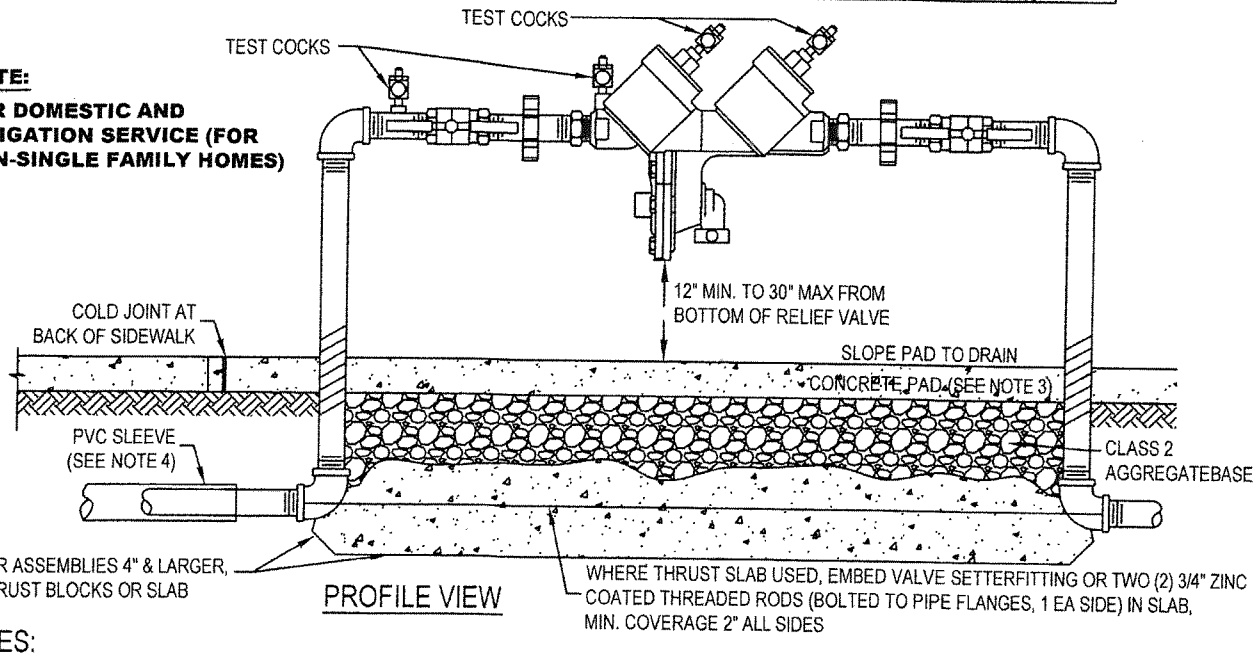

PROFILE VIEW

NOTES:

1. ALLOWED BACKFLOW ASSEMBLIES AND THEIR ORIENTATIONS SHALL BE LIMITED TO THOSE SPECIFIED ON THE "LIST OF APPROVED BACKFLOW PREVENTION ASSEMBLIES" BY THE UNIVERSITY OF SOUTHERN CALIFORNIA'S FOUNDATION FOR CROSS-CONNECTION CONTROL AND HYDRAULIC RESEARCH, 2010 OR LATEST REVISION.
2. THE BACKFLOW DEVICE SHALL BE LOCATED:(A) A MAXIMUM OF 5' FROM BACK OF SIDEWALK(TYP); (B) WHERE SCREENING IS REQUIRED, A MAXIMUM OF 30" FROM BACK OF SIDEWALK; OR (C) AT A LOCATION DETERMINED BY THE WATER DISTRIBUTION CROSS CONNECTION PERSONNEL IN THE FIELD.
3. CONCRETE PAD SHALL BE CLASS B CONCRETE, 4" MINIMUM THICKNESS, REINFORCED WITH WELDED WIRE MESH.
4. WHERE SERVICE LINES SMALLER THAN 4" PASS UNDER A SIDEWALK, THEY SHALL BE INSTALLED IN A PVC CASING/SLEEVE AT LEAST 1" LARGER THAN THE SERVICE LINE AND EXTENDS AT LEAST 6" BEYOND THE EDGES OF THE SIDEWALK.
5. METAL PIPES EXPOSED TO SOIL OR CONCRETE SHALL BE COATED WITH 3M SCOTCHWRAP PIPE PRIMER AND WRAPPED WITH 3M SCOTCHWRAP NO.51 BLACK PVC TAPE(3/4"OVERLAP).
6. THE PORTION OF THE TRENCH FROM BACK OF METER TO THE DEVICE SHALL REMAIN OPEN UNTIL WATER DISTRIBUTION CROSS CONNECTION PERSONNEL HAVE INSPECTED AND APPROVED THE INSTALLATION. CALL 408-730-7900
7. THE TESTING SIDE OF THE DEVICE SHALL HAVE A MINIMUM 24" OF CLEARANCE FROM OBSTRUCTIONS(NON-TRIMBLE LANDSCAPING, BUILDINGS, UTILITIES, ETC). MULTIPLE BACKFLOW DEVICES SHALL BE SEPARATED BY A MINIMUM OF 18" AND BE OF EQUAL HEIGHT.
8. BACKFLOW ASSEMBLIES SMALLER THAN 2.5" MAY BE COVERED WITH AN INSULATION BLANKET, MIN R-13, GREEN, WEATHERGUARD OR EQUAL AND PROTECTED BY A LOCKABLE WIRE CAGE ENCLOSURE FASTENED TO THE PAD. THE ENCLOSURE SHALL BE HINGED, POWDER COATED GREEN AND SECURED WITH DOUBLE-LOCKED GALVANIZED CHAIN SUCH THAT EITHER LOCK CAN RELEASE THE CHAIN.
9. BACKFLOW ASSEMBLIES 2.5" AND LARGER SHALL BE SECURED BY A DOUBLE-LOCKED, GALVANIZED, STRAIGHT LINK CHAIN THAT LOCKS THE VALVE HANDWHEELS IN THE OPEN POSITION AND EITHER LOCK CAN RELEASE THE CHAIN. IN AREAS PRONE TO VANDALISM, CITY MAY ADDITIONALLY REQUIRE A LOCKABLE PROTECTIVE ENCLOSURE (SEE NOTE 8).
10. BOLLARDS MAY BE REQUIRED BY CITY TO PROVIDE ADDITIONAL PROTECTION.
11. BACKFLOW ASSEMBLIES INSTALLED ON POTABLE WATER SERVICES SHALL BE LEAD FREE.
12. BACKFLOW ASSEMBLIES SHALL BE THE SAME SIZE OF THE WATER METER.

BACKFLOW PREVENTION DEVICE SIZE UP TO 2"

APPROVED BY:

DATE: JUNE 30, 2006
REVISED: SEPTEMBER 2014

DWG. **18B**

2006 STANDARD DETAILS

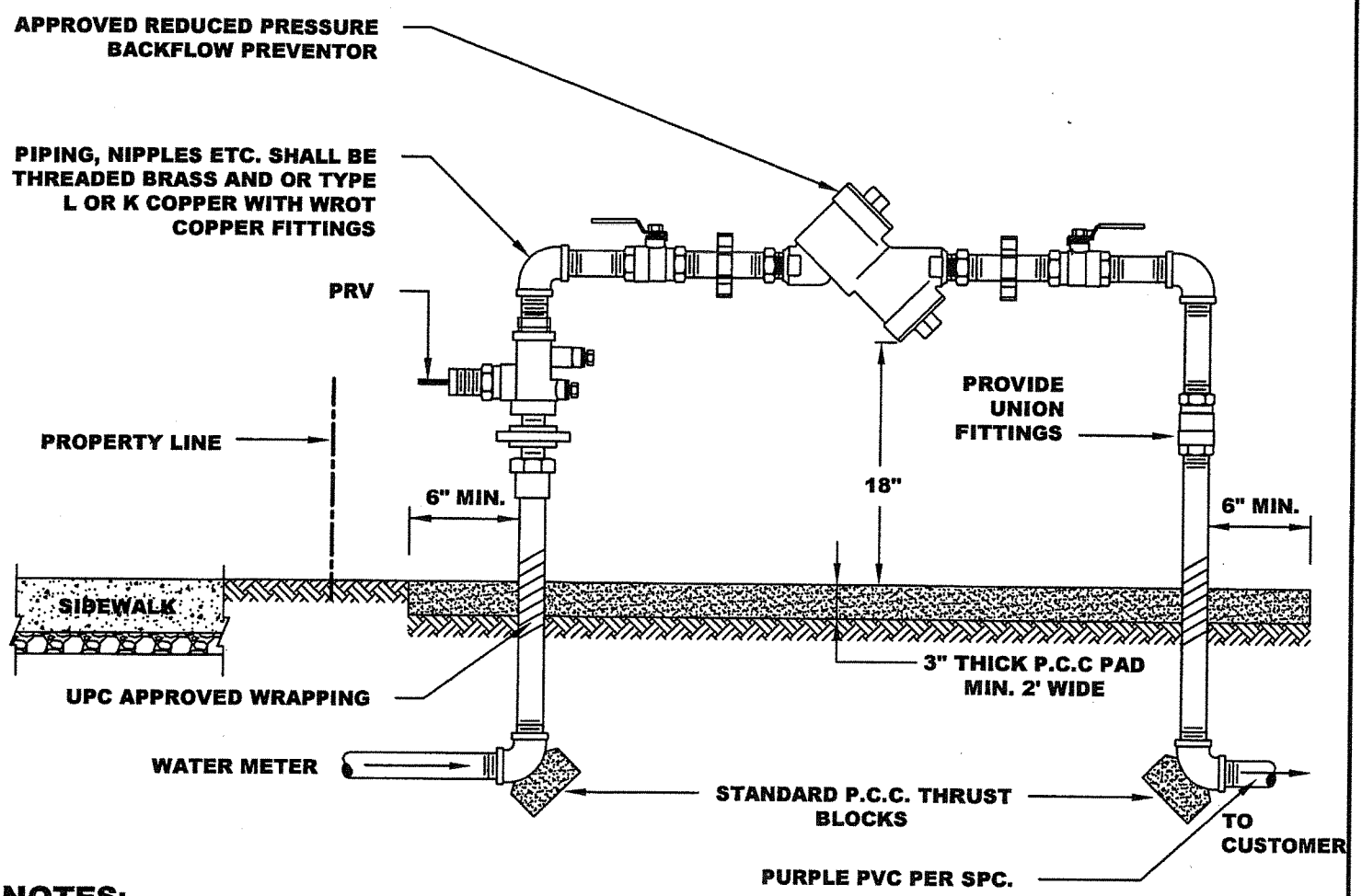

NOTES:

1. DOUBLE CHECK TYPE BACKFLOW DEVICES SHALL BE REQUIRED FOR ALL CONNECTIONS TO RECYCLED WATER SUPPLY. (SIZE TO RW METER)

2. BACKFLOW DEVICES SHALL BE INSTALLED ADJACENT TO AND ON PROPERTY SIDE OF SIDEWALK WHERE APPLICABLE. THE ASSEMBLY SHALL BE INSTALLED AS CLOSE AS POSSIBLE TO WATER METER.

3. ALL DEVICES WILL HAVE RESILIENT SEATED SHUT - OFF VALVES. TEST COCKS WILL HAVE THREADED ENDS.

4. BACK FLOW DEVICES TO BE 12" TO MAX OF 18" ABOVE GRADE.

5. PIPING, NIPPLES ETC. FOR STANDPIPES AND BACKFLOW COMPONENTS SHALL BE THREADED BRASS AND OR TYPE L OR TYPE K COPPER WITH WROT COPPER FITTINGS. (NO GALVANIZED STEEL PIPING OR FITTINGS ALLOWED)

6. PRESURE REDUCER REQUIRED ON UPSTREAM SIDE OF BF DEVICE. (SIZE TO BF)

7. ENCLOSURE REQUIRED FOR NEW DEVELOPMENT (NEW CONSTRUCTION) PROJECTS (SEE DWG. 20B OR EQUAL. FOR RETROFITING EXISTING BACKFLOW DEVICES, NO ENCLOSURE REQUIRED, DEVICE MUST BE SPRAY PAINTED WITH TWO COATS GLOSS BLACK UV & WEATER RESISTANT PAINT (RUSTOLEUM, ETC)

BACKFLOW PREVENTION DEVICE (2 OF 2) RECYCLED WATER	Marvin A Rae APPROVED BY:	
	DATE : JUNE 30, 2006 REVISED : APRIL, 2007	DWG. 18B-1

2006 STANDARD DETAILS

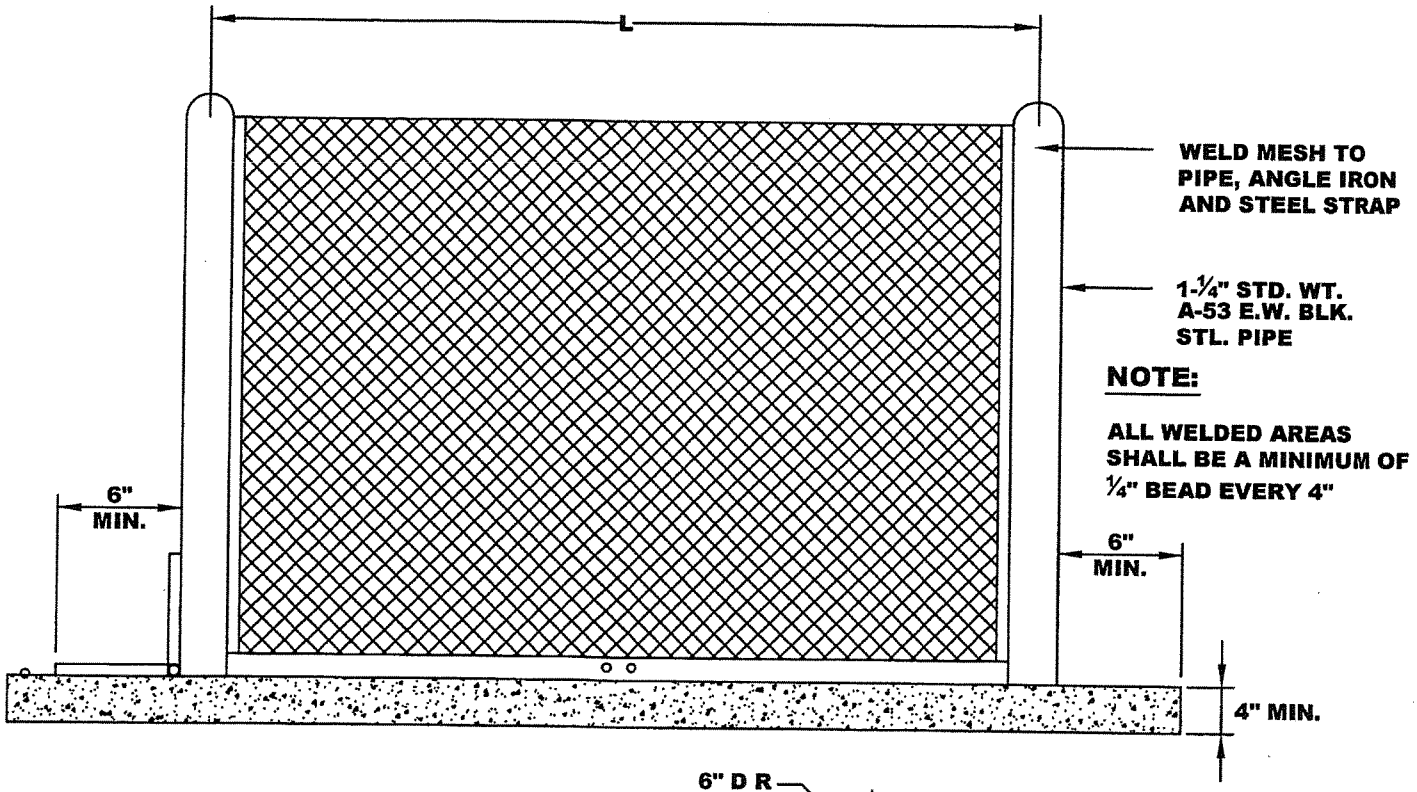

NOTE:

ALL WELDED AREAS SHALL BE A MINIMUM OF ¼" BEAD EVERY 4"

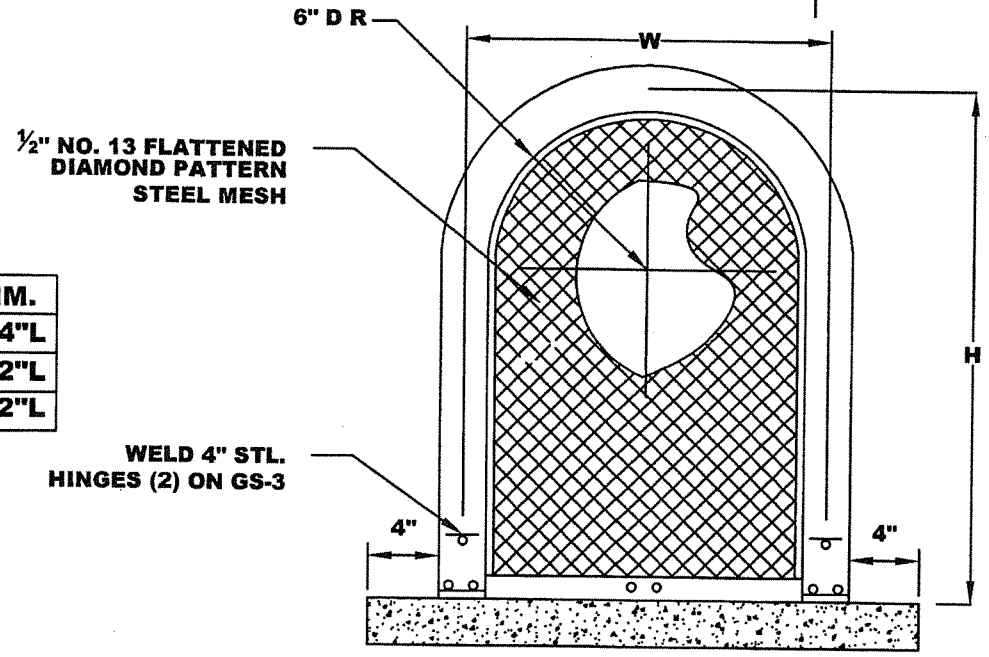

MODEL	CENTERLINE DIM.
GS - 1	12"W x 24"H x 24"L
GS - 2	12"W x 24"H x 32"L
GS - 3	12"W x 18"H x 42"L

NOTES:

1. ENCLOSURE REQUIRED ON ALL NEW CONSTRUCTION BACKFLOW DEVICES FOR SIZES ¾" TO 2".
2. "GUARDSHACK TMENCLOSURE" MODEL GS OR APPROVED EQUAL, PHOENIX, ARIZONA 85032 (602-788-5411)
3. AFTER ALL WELDING, ELECTROSTATIC APPLICATION OF POWDER SHALL BE FUSION BONDED TO ENTIRE ENCLOSURE. (BLACK)
4. ALL BOLTS SHALL BE ZINC PLATED.

BACKFLOW PREVENTION DEVICE ENCLOSURE	APPROVED BY:	
	DATE: JUNE 30, 2006	19B

2006 STANDARD DETAILS

NOTE:

FOR DOMESTIC SERVICE OF ALL TYPE OF OCCUPANCIES (INCLUDING SHARED DOMESTIC AND FIRE SERVICES)

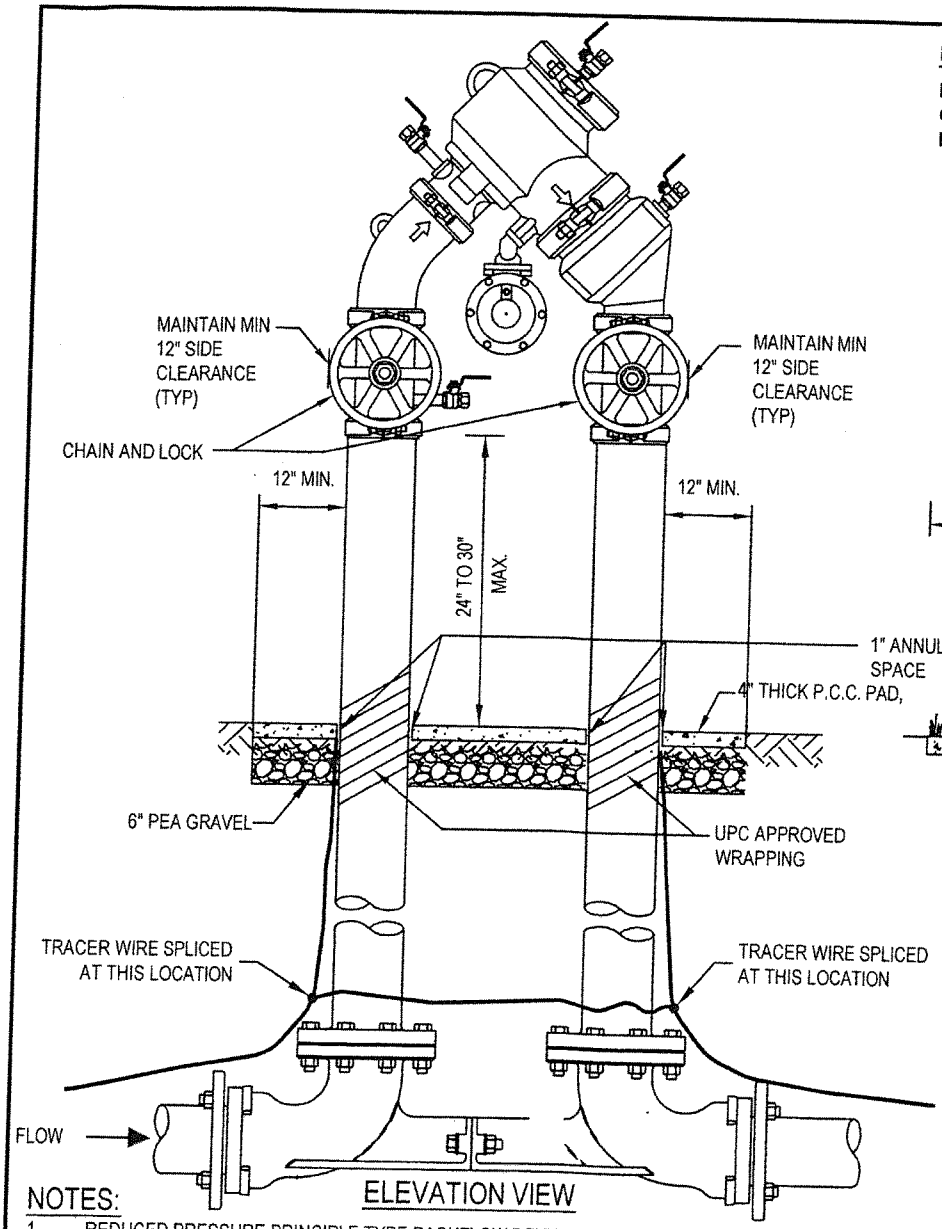

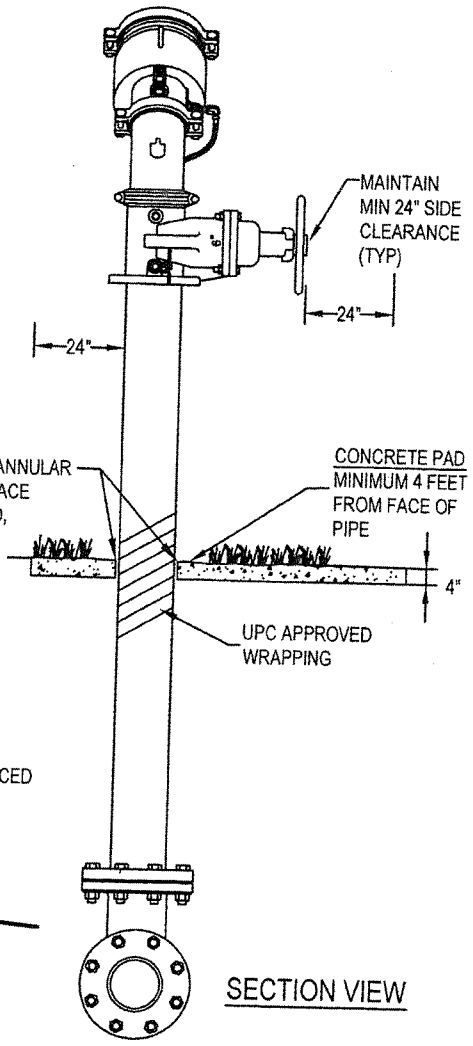

NOTES:

1. REDUCED PRESSURE PRINCIPLE TYPE BACKFLOW DEVICES SHALL BE WILKINS, FEBCO APPROVAL EQUAL PER USC LIST OF APPROVED BACKFLOWS.
2. REDUCED PRESSURE PRINCIPLE TYPE BACKFLOW DEVICES SHALL BE REQUIRED FOR THE PROTECTION OF THE PUBLIC WATER SUPPLY. (NO DOUBLE CHECK VALVE ASSEMBLIES, SEE AIR GAP)
3. BACKFLOW DEVICES SHALL BE INSTALLED ADJACENT TO AND ON PROPERTY SIDE OF SIDEWALK WHERE APPLICABLE. THE ASSEMBLY SHALL BE INSTALLED AS CLOSE AS POSSIBLE TO THE WATER METER AS APPROVED BY THE CITY'S CROSS CONNECTION PERSONNEL.
4. ALL DEVICES WILL HAVE RESILIENT SEATED SHUT - OFF VALVES. TEST COCKS WILL HAVE THREADED ENDS.
5. PRESS. DIFFERENTIAL VALVE OPENING TO BE 24" MINIMUM ABOVE GRADE
6. ALL PIPES AND SPOOLS SHALL BE DUCTILE IRON AND ALL JOINTS FLANGED.
7. ALL BOLTS/NUTS SHALL BE STAINLESS STEEL COMPONENTS.
8. ENTIRE ASSEMBLY (EXCLUDING I.D TAG) TO BE SPRAY PAINTED WITH RESISTANT PAINT. (RUSTOLEUM, ETC.)
9. DO NOT PAINT BRASS FITTINGS.
10. VALVE CONFIGURATION DECIDED ON JOB SITE.
11. ON SLOPING SURFACES, CONTRACTOR SHALL INSTALL A CONCRETE CURB/ WALL OR EQUIVALENT AROUND THE BACKFLOW.
12. THE PORTION OF THE TRENCH FROM BACK OF METER SHALL REMAIN OPEN UNTIL WATER DISTRIBUTION PERSONNEL HAVE INSPECTED AND APPROVED THE INSTALLATION, CALL 408-730-7900.
13. THE VALVE HANDWHEELS SHALL BE DOUBLE-LOCKED USING GALVANIZED STRAIGHT LINK CHAIN THAT LOCKS THE VALVE HANDWHEELS IN THE OPEN POSITION AND EITHER LOCK WILL RELEASE THE CHAIN.
14. BACKFLOW DEVICES SHALL BE LEAD FREE.
15. BACKFLOW ASSEMBLIES SHALL BE THE SAME SIZE AS THE METER.

DOMESTIC RP ASSEMBLY BACKFLOW PREVENTION DEVICE SIZE 2½" AND LARGER	APPROVED BY:	
	DATE: JUNE 30, 2006 REVISED: SEPTEMBER 2014	DWG. 20B

2006 STANDARD DETAILS

NOTE:

FOR DEDICATED FIRE SERVICES: FOR NON-OFFICE AND/OR NON-INDUSTRIAL OCCUPANCIES. FOR OFFICE AND/OR INDUSTRIAL OCCUPANCIES, USE RPDA (DETAIL 21B-1)

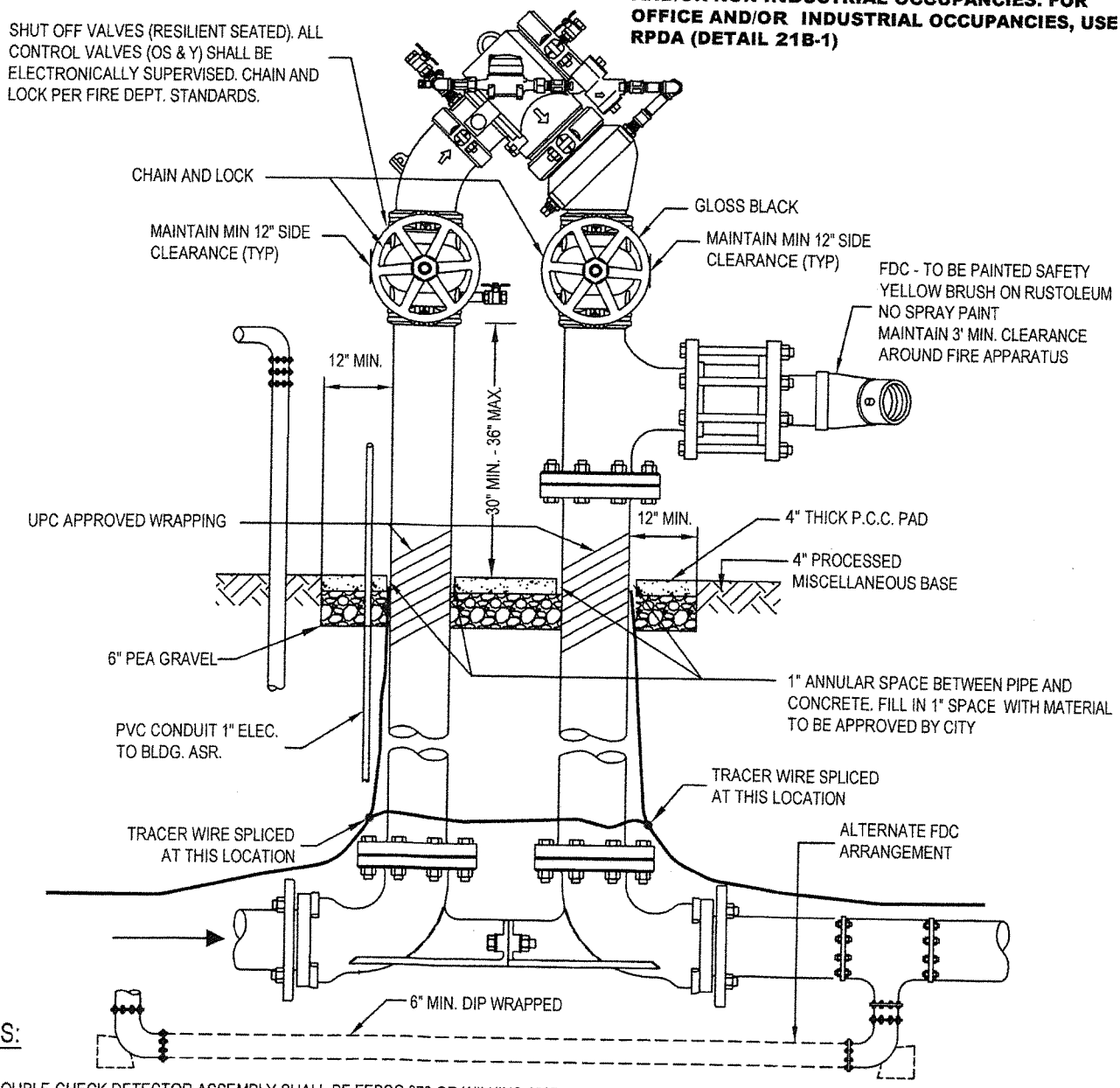

NOTES:

1. DOUBLE CHECK DETECTOR ASSEMBLY SHALL BE FEBCO 876 OR WILKINS 450DA OR PRIOR APPROVED EQUAL (RPDA REQUIRED IF CHEMICALS INTRODUCED TO SYSTEM SEE DETAIL 21B-1).
2. ENTIRE BODY OF DEVICE (EXCLUDING I.D. TAG) TO BE PAINTED WITH TWO COATS OF #6 GLOSS BLACK RUSTOLEUM (NO SPRAY) BLACK UV AND WEATHER RESISTANT PAINT (RUSTOLEUM, ETC.).
3. FDC TO BE PAINTED SAFETY YELLOW AND REMAIN VISIBLE AND ACCESSIBLE.
4. DIP TO BE PROTECTED WRAP CA-1200 POLYGUARD CA-14 MASTIC OR APPROVED EQUAL.
5. ALL TRIM HARDWARE TO BE BRASS OR BRONZE.
6. RADIO READ METER FEE TO BE PAID AT TIME OF PERMIT APPLICATION (METER TO BE INSTALLED BY CITY).
7. UNDERGROUND FITTINGS TO BE FUSION EPOXY COATED, CONNECTIONS TO BE FLANGED OR MEGALUG WITH FLUOROPLYMER (TRIPAC) COATED BOLTS AND NUTS OR 316 STAINLESS STEEL BOLTS AND NUTS OR A COMBINATION OF THE TWO.
8. FOR SECTION VIEW PLEASE SEE 20B.
9. THE PORTION OF THE TRENCH FROM BACK OF METER SHALL REMAIN OPEN UNTIL WATER DISTRIBUTION PERSONNEL HAVE INSPECTED AND APPROVED THE INSTALLATION, CALL 408-730-7900.
10. BACKFLOW DEVICES SHALL BE LEAD FREE.

FIRE SERVICE - DOUBLECHECK DETECTOR ASSEMBLY (DCDA)

APPROVED BY:

DATE: JUNE 30, 2006
REVISED: SEPTEMBER 2014

DWG. 21B

2006 STANDARD DETAILS

NOTE:

FOR DEDICATED FIRE SERVICES: FOR OFFICE AND/OR INDUSTRIAL OCCUPANCIES. FOR OTHER OCCUPANCIES, USE DCDA (DETAIL 21 B)

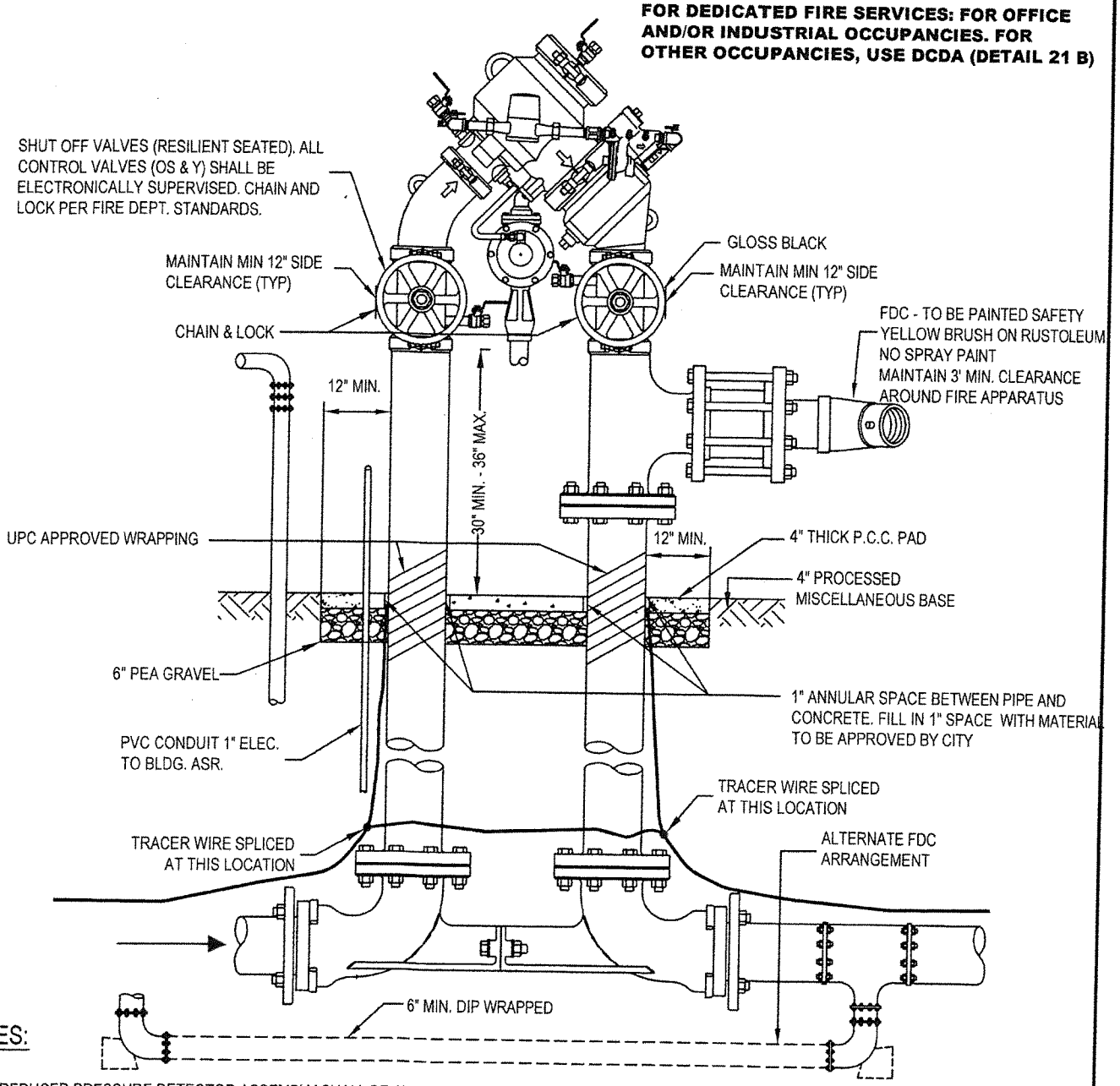

NOTES:

1. REDUCED PRESSURE DETECTOR ASSEMBLY SHALL BE WILKINS 475DA OR PRIOR APPROVED EQUAL (RPDA REQUIRED IF CHEMICALS ARE INTRODUCED TO SYSTEM).
2. ENTIRE BODY OF DEVICE (EXCLUDING I.D. TAG) TO BE PAINTED WITH TWO COATS OF #6 GLOSS BLACK RUSTOLEUM (NO SPRAY) BLACK UV AND WEATHER RESISTANT PAINT (RUSTOLEUM, ETC.).
3. FDC TO BE PAINTED SAFETY YELLOW AND REMAIN VISIBLE AND ACCESSIBLE.
4. DIP TO BE PROTECTED WRAP CA-1200 POLYGUARD CA-14 MASTIC OR APPROVED EQUAL.
5. ALL TRIM HARDWARE TO BE BRASS OR BRONZE.
6. RADIO READ METER FEE TO BE PAID AT TIME OF PERMIT APPLICATION (METER TO BE INSTALLED BY CITY).
7. UNDERGROUND FITTINGS TO BE FUSION EPOXY COATED, CONNECTIONS TO BE FLANGED OR MEGALUG WITH FLUOROPLYMER (TRIPAC) COATED BOLTS AND NUTS OR 316 STAINLESS STEEL BOLTS AND NUTS OR A COMBINATION OF THE TWO.
8. FOR SECTION VIEW PLEASE SEE 20B.
9. THE PORTION OF THE TRENCH FROM BACK OF METER SHALL REMAIN OPEN UNTIL WATER DISTRIBUTION PERSONNEL HAVE INSPECTED AND APPROVED THE INSTALLATION, CALL 408-730-7900.
10. BACKFLOW DEVICES SHALL BE LEAD FREE.

FIRE SERVICE - REDUCED PRESSURE DETECTOR ASSEMBLY (RPDA)

APPROVED BY:

DATE : JUNE 30, 2006
REVISED: SEPTEMBER 2014

DWG. 21B-1

2006 STANDARD DETAILS

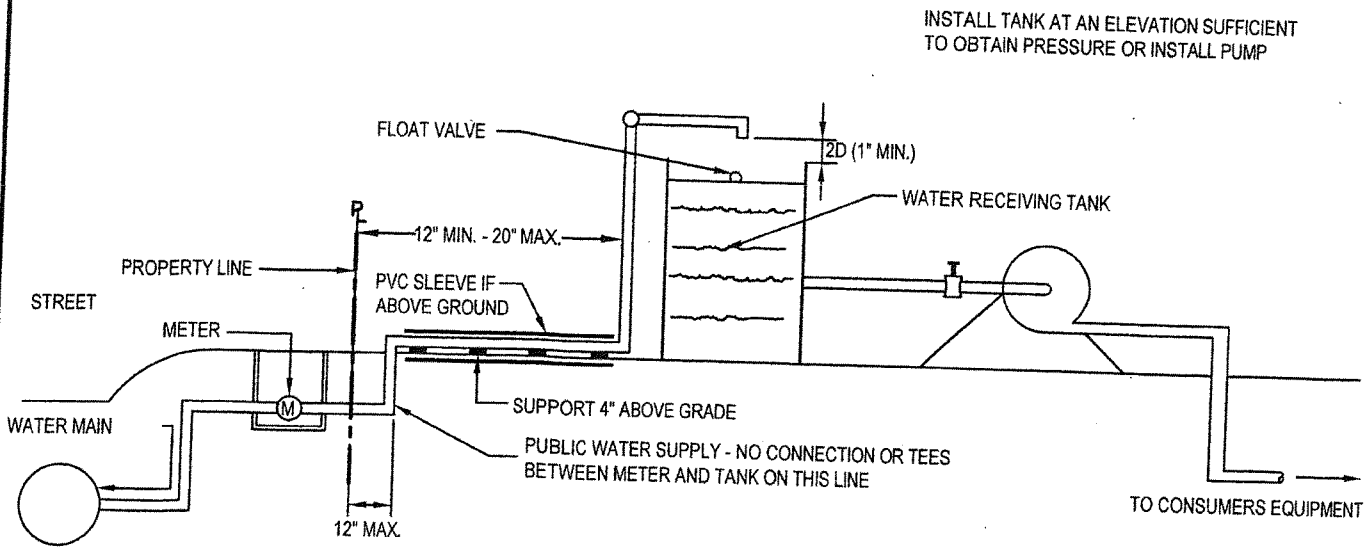

AIR GAP SEPARATION

NOTE:

1. TANK SHOULD BE OF SUBSTANTIAL CONSTRUCTION AND OF A KIND AND SIZE TO SUIT CONSUMERS NEEDS. TANK MAY BE SITUATED AT GROUND LEVEL (WITH A PUMP TO PROVIDE ADEQUATE PRESSURE HEAD) OR TO BE ELEVATED ABOVE GROUND.
2. THE METER SHALL REMAIN OFF UNTIL THE AIR GAP IS INSPECTED AND APPROVED BY THE WATER DISTRIBUTION PERSONNEL, CALL 408-730-7900.

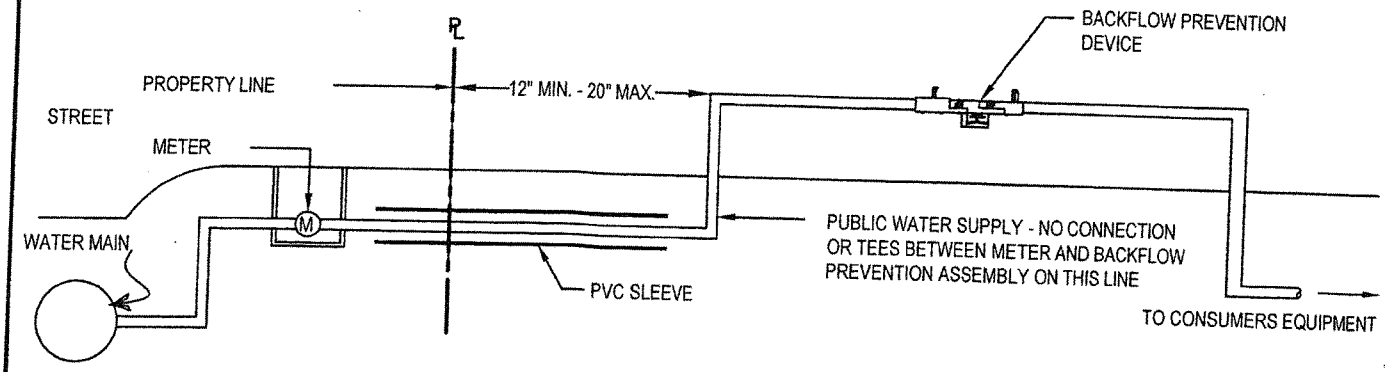

BACKFLOW PREVENTION ASSEMBLY

NOTE:

SEE DETAILS 18B & 18B-1

INSTALLATION OF BACKFLOW PREVENTION DEVICE	APPROVED BY:	
	DATE: JUNE 30, 2006 **REVISED: SEPTEMBER 2014**	**22B**

2006 STANDARD DETAILS

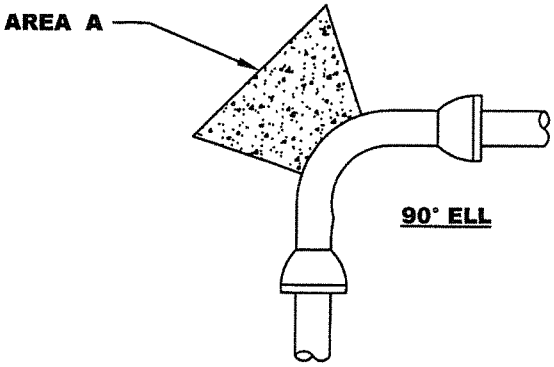

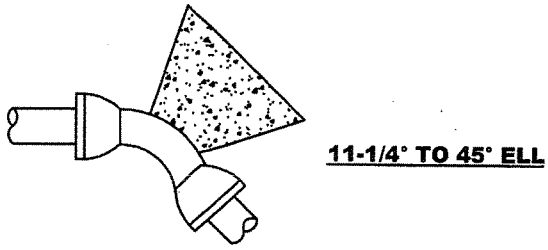

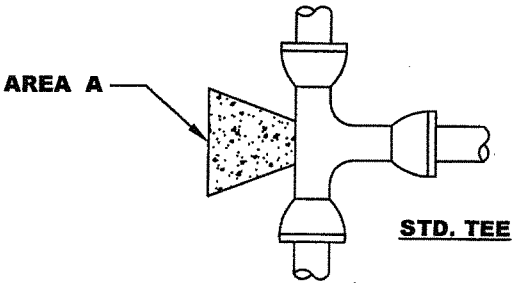

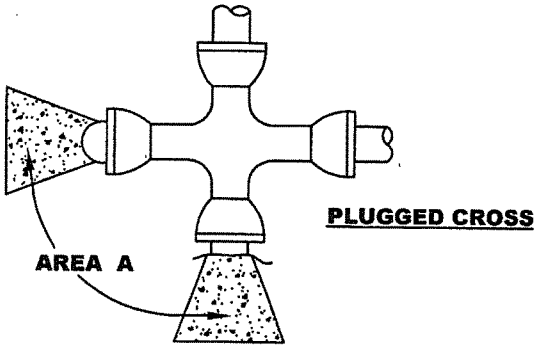

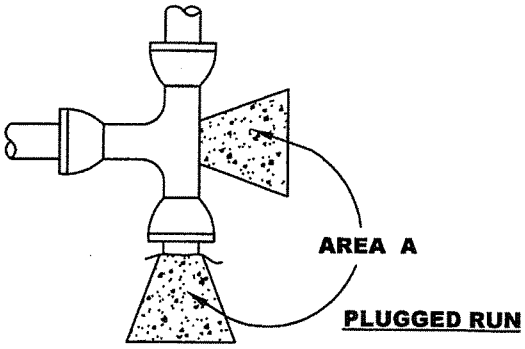

AREA (A) IN SQ. FT.

TYPE OF FITTING	SIZE OF PIPE							
	4"	6"	8"	10"	12"	14"	16"	18"
90° ELL	1.5	3	5	8	11	15	19	24
45° ELL	1	2	3	4	6	8	11	13
22 1/2° ELL	1	2	2	2	3	4	6	7
11 1/4° ELL	1	2	2	2	2	2	3	4
PLUG/TEE	1	2	4	6	8	11	14	17

NOTE:

1. ALL THRUST BLOCKS SHALL BEAR AGAINST UNDISTURBED EARTH.

BASED ON SOIL BEARING VALUE OF 3,000 LBS. PER SQ. FT. AND WATER PRESSURE OF 200 PSI FORM AS REQUIRED TO KEEP HYDRAULIC FORCES OFF OF MECHANICAL JOINT OR FLANGE BOLTS.

NO SCALE

2006 STANDARD DETAILS

THRUST BLOCKS MISCELLANEOUS

APPROVED BY:

DATE: JUNE 30, 2006

DWG. 23B

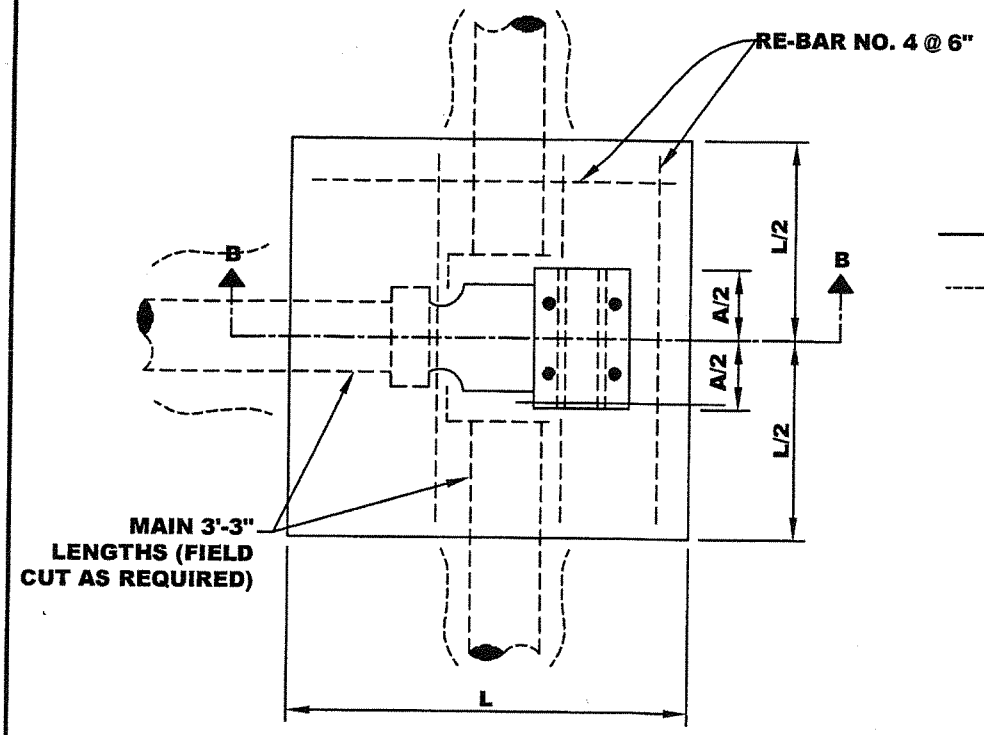

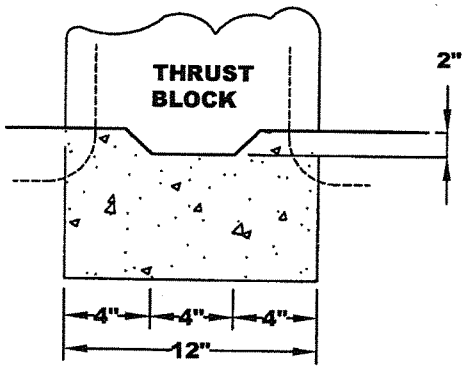

KEY DETAIL

NOTES:

1. ALL FITTING JOINTS WILL BE CLEAR OF ALL CONCRETE.
2. CONCRETE SHALL BE TYPE V.
3. USE 3' LENGTHS OF PIPE ONE EACH SIDE EVERY FITTING.

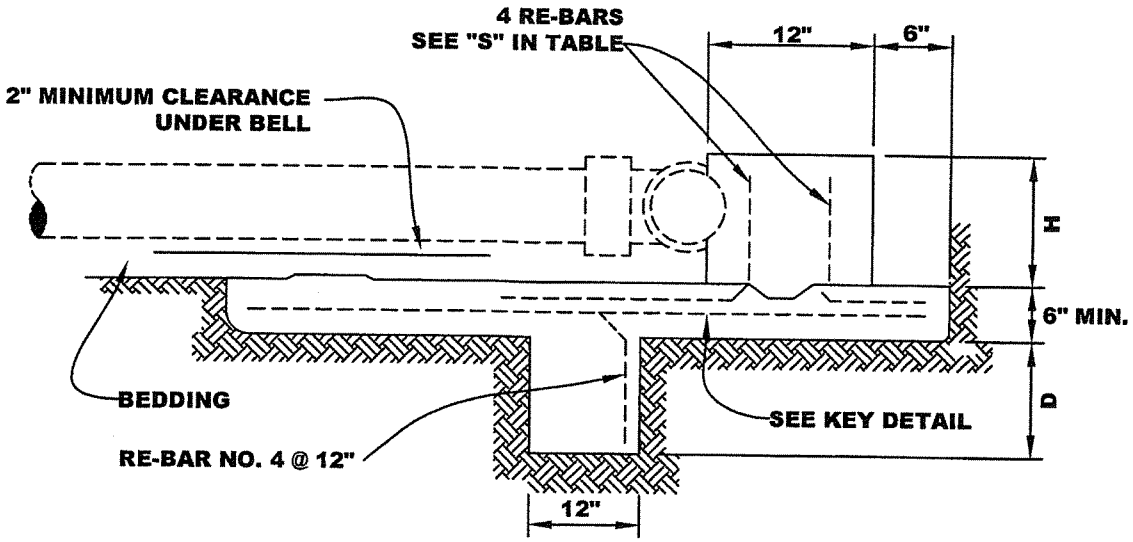

SECTION B-B

DIMENSION TABLE FOR TEE AND DEAD ENDS						
PIPE DIAMETER	TEE A	DEAD END A	D	H	L	RE-BAR "S" SIZE
6"	16"	8"	12"	12"	4'	NO. 4
8"	18"	10"	12"	14"	4'	NO. 4
10"	22"	12"	24"	16"	4'	NO. 5
12"	24"	14"	36"	18"	5'	NO. 6

NO SCALE

2006 STANDARD DETAILS

THRUST BLOCKS IN BAY MUD - 1 OF 2

APPROVED BY:

DATE : JUNE 30, 2006

DWG. 24B

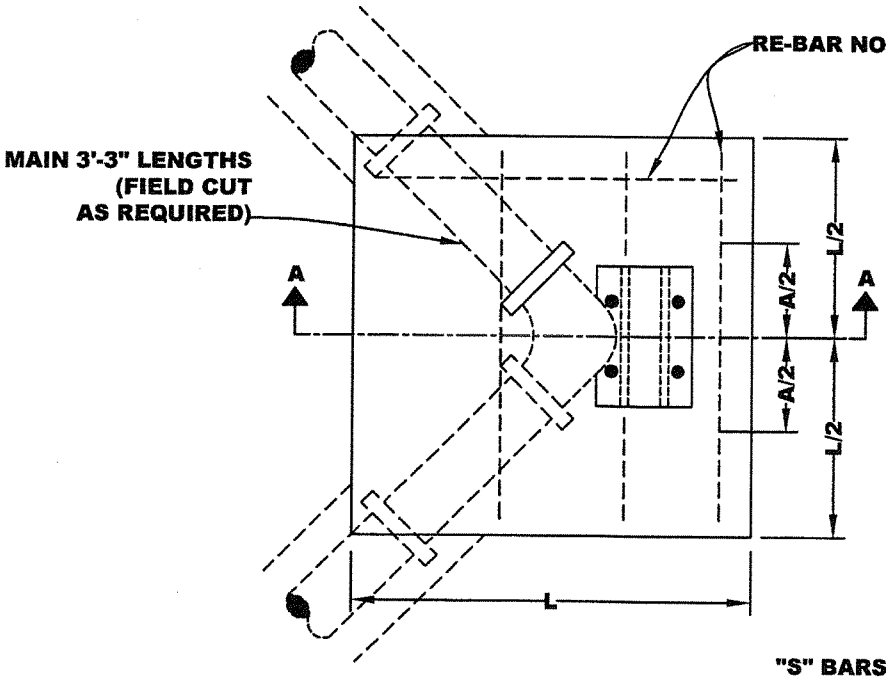

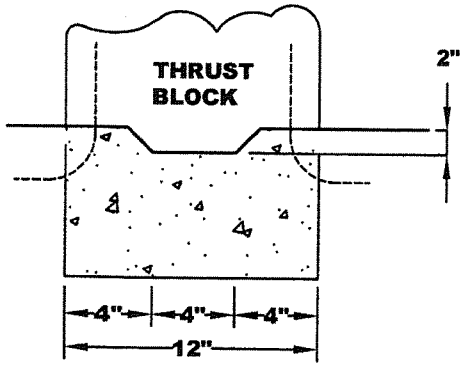

KEY DETAIL

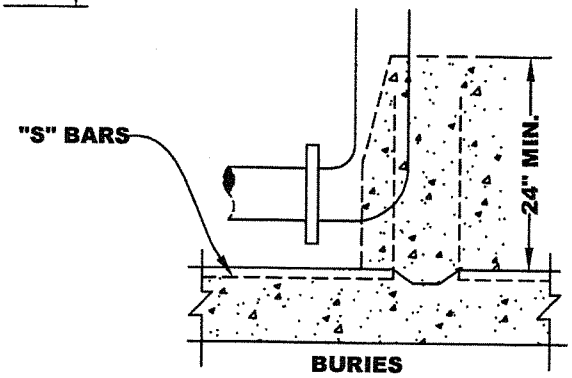

BURIES

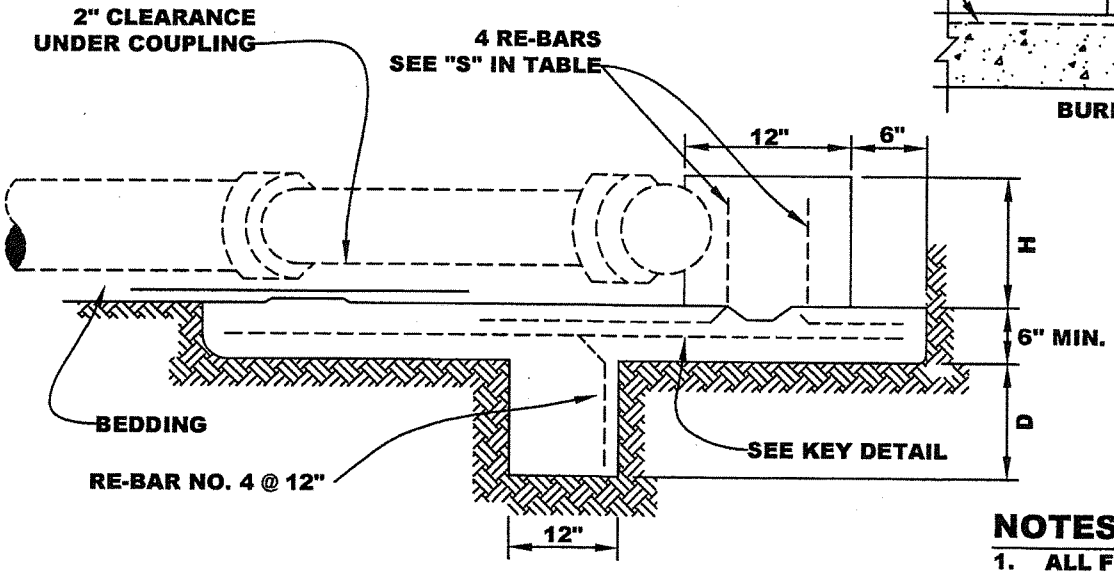

SECTION A-A

NOTES:

1. ALL FITTING JOINTS WILL BE CLEAR OF ALL CONCRETE.
2. CONCRETE SHALL BE TYPE V.
3. USE 3' LENGTHS OF PIPE ONE EACH SIDE EVERY FITTING.

DIMENSION TABLE FOR HORIZONTAL BENDS

PIPE DIAMETER	90 DEG BEND					45 DEG BEND					22 DEG 30' BEND					11 DEG 15' BEND				
	A	D	H	L	RE - BAR "S" SIZE	A	D	H	L	RE - BAR "S" SIZE	A	D	H	L	RE - BAR "S" SIZE	A	D	H	L	RE - BAR "S" SIZE
6"	15"	12"	12"	4'	NO. 4	10"	12"	12"	3'	NO. 4	8"	6"	12"	3'	NO. 4	7"	6"	12"	3'	NO. 4
8"	18"	12"	14"	4'	NO. 4	12"	12"	14"	4'	NO. 4	9"	6"	14"	3'	NO. 4	8"	6"	14"	3'	NO. 4
10"	23"	24"	16"	5'	NO. 5	13"	12"	16"	4'	NO. 5	11"	12"	16"	4'	NO. 4	9"	6"	16"	3'	NO. 5
12"	26"	36"	18"	5'	NO. 6	15"	24"	18"	4'	NO. 5	13"	12"	18"	4'	NO. 4	10"	6"	18"	4'	NO. 5

NO SCALE

THRUST BLOCKS IN BAY MUD - 2 OF 2

APPROVED BY:

DATE : JUNE 30, 2006

DWG. 25B

2006 STANDARD DETAILS