BROWN AND CALDWELL

201 N. Civic Drive, Suite 115
Walnut Creek, CA, 94596
Tel: 925.937.9010
Fax: 925.937.9026

Technical Memorandum

Prepared for: City of Sunnyvale

Project Title: Sunnyvale WPCP Strategic Infrastructure Plan

Project No: 135083

Technical Memorandum

Subject: Electrical Power System Level of Service

Date: October 22, 2008

To: Lorrie Gervin, City of Sunnyvale

From: Lloyd A. Slezak, Project Manager, Brown and Caldwell
Engineer in Responsible Charge, CA. Lic. No. C61492

Prepared By: _____

Gregg A. Boltz, P.E., No. CA-E-14094 Exp. 06/30/2011

Reviewed By: _____

Lloyd A. Slezak, P.E., Vice President, No. 61492 Exp. 06/30/2011

1. INTRODUCTION

The purpose of this technical memorandum (TM) is to review the plant electrical power distribution system with respect to its ability to provide the required level of service to the Sunnyvale Water Pollution Control Plant (WPCF). Criteria are presented to determine what the required level of service should be for the power system. Considerations are given to equipment condition, age, expected service life, and redundancy of the electrical power distribution system equipment.

Our review found the electrical power system to be in good condition, meeting most of the plant's current needs. However, potential changes to plant operations, primarily driven by regulations, along with the near-obsolescence of much of the equipment, may require some major changes in the electrical system. This is especially true of the standby power system that must provide electrical power to the WPCF during times of utility power outage or equipment failure.

1.1 Recommendations

- Develop schedule for replacement of equipment identified to be too deficient or difficult to maintain. Equipment 30 years old or more should be scheduled for replacement.
- Upgrade the standby power system. The new system should have a larger diesel-fueled engine-driven generator, sized to meet the foreseeable needs of the WPCF. Unit can be stand-alone, as is the case now, or can be connected to operate in parallel with the cogen units.
- Install tie circuit breaker to split the bus on the main 4.16kV switchgear, to serve an upgraded 4.16kV primary distribution system. Rather than modify the existing switchgear, another switchgear may be installed nearby to serve as a Standby Power Bus or as a complete replacement.
- Upgrade the primary electrical distribution system to allow quick restoration of power for 4.16kV cable failure. A primary selective system is recommended.
- Continue a program of scheduled maintenance for electrical equipment.
- Implement a program to repair enclosures of electrical equipment where equipment is primarily failing due to corrosion. Repair corrosion, paint or coat with other material.
- Consider implementing measures to protect outdoor electrical equipment from rain and other sources of water such as irrigation sprinklers.
- New electrical equipment should be located at an elevation not subject to flooding.
- Locate new electrical equipment indoors, in dedicated structure if necessary.

2. LEVEL OF SERVICE REQUIREMENTS

2.1 Existing System

The existing electrical power distribution system at WPCP receives electrical power from Pacific Gas and Electric Company (PG&E). The service voltage from PG&E is 4,160 volts (4.16kV). The service is provided via a single PG&E-owned transformer. WPCP drawings indicate the transformer has a nameplate power rating of 2500 kilovolt-amperes (KVA).

PG&E's transformer supplies an outdoor 4.16kV switchgear lineup that is owned by the WPCF. The 4.16kV Main Switchgear contains PG&E's metering equipment used for billing purposes. The 5kV switchgear appears to have been originally installed in 1970 and has been expanded since then. The switchgear has six

feeder circuit breakers that distribute electricity to the various load centers throughout the plant. A tie breaker connects the cogeneration (cogen) plant switchgear to the main switchgear. The feeders to most of the load centers are simple radial feeds, in that there is only one power source (cable) available to the loadcenter. The exception to this are the two loadcenters serving the ponds, which are served by a 4.16kV loop with each loadcenter having a primary selector switch capable of selecting either side of the loop as a power source.

The cogen switchgear was installed about 1997 with the two gas-burning, engine-driven generators. Each cogen unit has a nameplate rating of 800kW. Fuel for the cogen units is a blend of gasses including natural gas, digester gas, and landfill gas. The landfill gas is produced from a nearby landfill. Production of landfill gas has been dropping steadily since the cogen units were installed, causing an increasing reliance on natural gas to fuel the cogen units.

Step-down transformers located at loadcenters throughout the plant, transform the 4.16kV distribution voltage to 480 volts for utilization by plant loads. Once transformed, the 480V electrical power is distributed to loads located near each load center via a combination of 480V electrical equipment types including switchgear, switchboards, motor control centers (MCCs), and panel boards. Figure 1 is a single line diagram showing the main elements of the electrical power distribution system.

A diesel-fueled, engine-driven generator provides a limited amount of standby electrical power to the WPCF when utility power fails. The standby generator is small, being rated only 80kW. It produces just enough power to facilitate starting of the influent pump engines or the cogeneration engines.

2.1.1 Electrical Equipment Condition

Brown and Caldwell (BC) met with WPCF staff to discuss the condition of the electrical distribution system equipment and conducted a visual inspection of the major components of the distribution system. Generally, the equipment is in good condition. Although much of it is more than 30 years old, it has been well maintained. WPCF staff has a scheduled maintenance program that calls for basic inspections of equipment annually and major inspection/testing of the equipment by an outside testing firm on a three-year cycle. Despite much of the equipment being located outdoors, good painting has limited deterioration of the equipment due to corrosion. The most significant factor to justify replacement of the existing equipment appears to be obsolescence. Because much of the equipment has been out of production for 20 years or more, WPCF staff report that direct replacement parts are becoming hard to purchase. This is especially true for the Allis-Chalmers motor control centers in the digester area (MCC-36023) and the sedimentation area (MCC-25003). Replacement equipment is available from the salvage/surplus/rebuild market, but availability can be hit-or-miss, and quality can be a problem because of the age of the equipment and lack of common rebuild/refurbish standards. Since much of the plant electrical equipment is approaching or is past the expected service life of 30 years, the City should plan on replacing it as part of its other process-related upgrades.

2.1.2 Standby Power System

The standby power system consists of both mechanical and electrical components, being engine-driven pumps/blowers, two gas-fueled cogeneration units, and a small engine-driven electrical generator.

2.1.3 Engine-Driven Pumps/Blowers

Presently, the largest process load is influent pumping and process air. The influent pumps are engine-driven, so they can maintain pumping to the clarifiers without electrical power from the utility. The engines use gas as a fuel. The pump engines also drive aeration blowers. The ability to maintain primary treatment with engine-driven equipment during a utility power outage has made it unnecessary for the WPCP to invest in

additional standby power generation equipment. Changes in air emission requirements may result in the WPCF needed to re-evaluate the use of engine-driven equipment instead of electric motor driven equipment.

2.1.4 Cogeneration Units

The plant has a power generation facility (PGF) that generates power using gas-fueled generators. The engines burn a combination of landfill gas, digester gas, and natural gas. In addition to generating electricity, waste heat is recovered from the engines for use in plant processes (cogeneration). Each cogen unit is rated 800kW, and together, they can provide all power needed to operate the plant under dry conditions, provided they are connected in parallel with PG&E. The cogen units can also be connected to provide standby power to the WPCF during utility power outages. However, during utility power outages where the units operate stand-alone (sometimes called island mode), the units are weak and unstable. It is difficult for them to pick up plant loads. This is common for gas-fueled engines, where the maximum size of load (block load) that can be connected to the generator at a time is usually about 10 percent of the generators rating is the maximum rating. The generators can be loaded to near rating, but no single load step (block) can be larger than 10 percent of the generator rating. The figure of 10 percent varies, depending upon the particular engine, engine controls, and the fuel, but based upon that figure, a single cogen unit would not be able to start a motor larger than 75 horsepower (hp). It may be even less for the WPCF generators, although operation of both generators in parallel usually improves block loading capability. The WPCF has many motors rated 75hp or more. In any case, staff reports that the cogen units presently cannot reliably provide sufficient standby power to maintain the full treatment process at the WPCF during utility power outages. If both engines are running, loading (starting of equipment) must be carefully controlled manually, otherwise the cogen units will trip off line and the plant will need to be restarted. Another problem with using gas-fueled engines for standby power is that the protective relays required by the utility often cause a cogen unit to disconnect from the loads when the outage is initiated. Sometimes, it is problematic restarting cogen units, and it often takes time for an operator (minutes, at least) to reconnect a cogen unit for standby power use. This is not to say that cogen units cannot be the sole-source of a plant's standby power under the right conditions. Typically, plants that use cogen units as their sole source of standby power have a number of relatively large units operating in parallel. It may be possible to increase the standby power capability of the existing cogen units, but it is beyond the scope of this memo to investigate this.

The plant also has an auxiliary pumping station (APS) that serves as a backup to the primary influent pump station. Staff reports that the existing standby power system cannot operate the APS. The APS influent pump has a motor rated 214hp.

WPCF personnel report plant staff would like to have more standby power available to operate various equipment and processes during power utility outages. Typically, a diesel-fueled standby generator is the most reliable source of standby power. Diesel engine-driven generators start relatively fast (10 seconds or less), and can accept large block loads without excessive speed (frequency) or voltage reduction. A diesel-engine driven standby generator based upon Caterpillar's 3516 engine (same engine as existing cogen units) can provide 2000kW of electrical power. This would be sufficient to operate all the plant processes under dry conditions. The cogeneration units could be connected in parallel with a diesel standby to provide additional power, or to lower diesel fuel consumption. A standby power system consisting of a diesel fueled generator (1500kW minimum) operated in parallel with the gas-fueled cogen units should be relatively stable, and able to operate all existing plant loads, at least in dry conditions, and perhaps even in wet conditions (more study is needed). The standby generator could be connected to the power system at the PGF, similar to the existing cogen units.

2.1.5 Standby Power Generator

Presently, the standby power system at the WPCF consists of a small 80kW engine-driven generator. The standby generator is normally connected to MCC-P, and provides electrical power to auxiliary systems in the primaries area to allow the influent pump engines and some related equipment to remain operational during utility power outages. The generator start automatically when a utility power outage occurs, and often, the influent pumps remain running if they were operating before the power outage occurred. If the influent pump engines stop, the standby power generator provides power to auxiliary equipment to allow them to be restarted.

The plant can also switch the power from the standby generator to go to the Power Generation Facility to start the cogeneration units, during plant outages. The standby generator does not have sufficient capacity to support both Primary Pumping and Power Generation facilities. The standby generator is sometimes referred to as the "Black Start" generator, since it is used to provide power auxiliary power to other systems during utility power outage (black) conditions.

2.1.6 Reliability and Redundancy

EPA Design Criteria

The standard measure of reliability for wastewater works similar to the Sunnyvale WPCF is the U.S. Environmental Protection Agency (EPA) publication entitled, "Design Criteria for Mechanical, Electrical, and Fluid System and Component Reliability" (document EPA-430-99-74-001).

In the design criteria, EPA requires that no single equipment failure cause more than 50 percent of the process to fail. In wastewater plants, there is often some time to find faulted equipment and arrange for the process to continue, but usually it is only a matter of hours, not days. Up until now, the WPCF has relied upon its ponds and engine-driven pumps to get it through short outages. It appears there has not been a catastrophic failure of the electrical equipment that would cause a major interruption of the treatment process and required a prolonged outage while repairs were made. However, the possibility exists that if certain parts of the electrical system failed, it would be difficult to maintain operations until the faulted equipment is replaced.

Primary (4.16kV) Distribution

The single most important equipment is the 4.16kV switchgear. If there was a short circuit inside it, the only power to the plant would be the standby generator. Influent pumping could be maintained. Portable generators would have to be brought in to power the treatment process while the 4.16kV switchgear is repaired. Other equipment where single point failures could occur are the main step-down transformers (there are six), the switchboards and motor control centers they feed. In fact, at the WPCF, much of the equipment in the electrical system appears to be a potential single point failure that could prevent treatment for an extended period of time. Apparently this has not happened because of the WPCF's good maintenance practices, and the ability to rely on the ponds and influent pump engines.

The EPA design criteria require that critical equipment be fed from at least two independent motor control centers. A goal of upgrades to the plant power system should be to split loads to be on at least two motor control centers so a failure of one does not reduce treatment capacity to less than 50 percent of peak flow treatment capacity.

Refer to Figure 2 which shows the EPA's required elements for power distribution to critical equipment, from the EPA design criteria. It shows two transformers as independent power sources to the treatment works, but allows generators to be used as power sources also. Two independent circuits are shown distributing power to multiple motor control centers in the works. In application, these circuits emanate from

switchgear or switchboards. Motor control centers are shown as independent, or with split bus and tie circuit breakers, and with two power sources available.

To eliminate single point failures at the 4.16kV distribution level in the WPCF, two independent circuits would be routed to each step-down transformer that serves critical loads. Figure 3 shows the common types of primary (4.16kV) voltage distribution systems commonly found in facilities similar to the WPCF. Presently, most of the WPCF system is a simple radial, with single transformers feeding an area and only one primary power source available to the transformer. The exception to this is the Pond Loadcenters, which have primary selective distribution. Some advantages and disadvantages for each type of power system are shown on the figure. Choosing which to use is a tradeoff between cost and reliability, with risk also becoming a factor. BC recommends the primary selective radial system to serve areas with critical loads at the WPCF. The looped system is a close second, but BC believes its operational difficulties offset its slight cost savings, for a facility like Sunnyvale WPCF. Areas that are not critical to the treatment process can remain simple radial feed as they are now.

To eliminate the potential single point failure in the 4.16kV switchgear, the switchgear would need a tie circuit breaker to allow the switchgear to be sectionalized, and a power feed from each side of the bus to each substation serving critical loads. Figure 4 depicts such a system. The tie breaker allows half of the switchgear to be isolated if faulted or to be shut down for maintenance, while the other half remains energized to serve the critical treatment processes. The tie breaker can be installed directly in the switchgear or independent switchgear enclosures can be used with feeder breakers serving at tie breakers. The latter configuration prevents the debris from an explosion from traveling to the unfaulted side of the switchgear, but at increase cost because of the extra footprint, extra cable, and sometimes an extra circuit breaker. Rather than modify the existing switchgear, another switchgear may be installed nearby to serve as a Standby Power Bus or as a complete replacement. Since the existing 4.16kV main switchgear at the WPCF has passed its expected service life, BC recommends the replacement equipment have the split bus feature with capacity to provide a feeder from each side of the switchgear bus to critical loads. Figure 4 shows how such a switchgear configuration could serve critical loads at the WPCF, using a primary selective distribution configuration.

Secondary (480V) Distribution

Most process loads at the WPCF are connected to secondary (480V) distribution system. EPA design criteria require the loads to be connected to multiple MCCs. EPA's drawing shown on Figure 2 specifies a connection point to distribution power to the MCCs, but doesn't clarify what this is. Typically, the connection between power feeders serving an area will be done in a switchgear or switchboard. Figure 5 shows such a system, where two switchboards distribute power from the transformers serving the area to the motor control centers connecting the loads in the area. Critical loads are distributed among the MCCs, so no more than 50 percent treatment capacity is lost if a motor control center is out of service for maintenance or due to failure. EPA requires a minimum of two MCCs. If there are three or more critical loads of the same type, three or four smaller MCCs may be a better choice than two large MCCs to connect equipment. Otherwise, where there are odd numbers of critical equipment, transfer switches will have to be provided for the some of the equipment, to allow it to be connected to either power source, in order to maintain 50 percent reliability. The use of the two switchboards to distribute the power to the MCCs prevents single-point failure in the secondary distribution system.

2.1.7 Environment

One factor that can greatly increase longevity of electrical equipment is environment. Equipment located indoors, is typically subject to less negative environmental effects, such as heating, cooling, moisture, dirt/dust, animals, and insects. Even when well-designed outdoor equipment is well maintained, anti-condensation heaters can fail, air filters/screens can plug or become open, gaskets fail. Insulation material becomes brittle sooner and metallic surface corrode sooner.

BC recommends that electrical equipment be located indoors in dedicated electrical rooms where possible. For indoor installations, air can be filtered to remove corrosive hydrogen sulfide gas, if deemed necessary.

Where equipment cannot be located indoors, a sun-shade should be considered to reduce exposure of the equipment to sun and rain.

Flood Risk

Upgrades to the WPCF should consider prevention of damage to electrical equipment due to flooding. Where possible, electrical equipment for critical processes should not be located in below-grade galleries or other buildings subject to flooding.

FIGURES

Figure 1. **Electrical Power Distribution System**

Figure 2. **EPA Figure 1 Feeder Distribution and Power Transfer**

Figure 3. **Common Primary Power Distribution System Configurations**

Figure 4. **Reconfigured 4.16KV System For Primary Selective Distribution**

Figure 5. **Typical Secondary Distribution Critical Load Area**

DRAFT for review purposes only.
Use of contents on this sheet is subject to the limitations specified at the beginning of this document.
P:\135000\135083 - Sunnyvale Strategic Infrastructure Plan\003-Establish Level of Services\EPAS\Final TM Electrical Power Level of Service.docx/jle

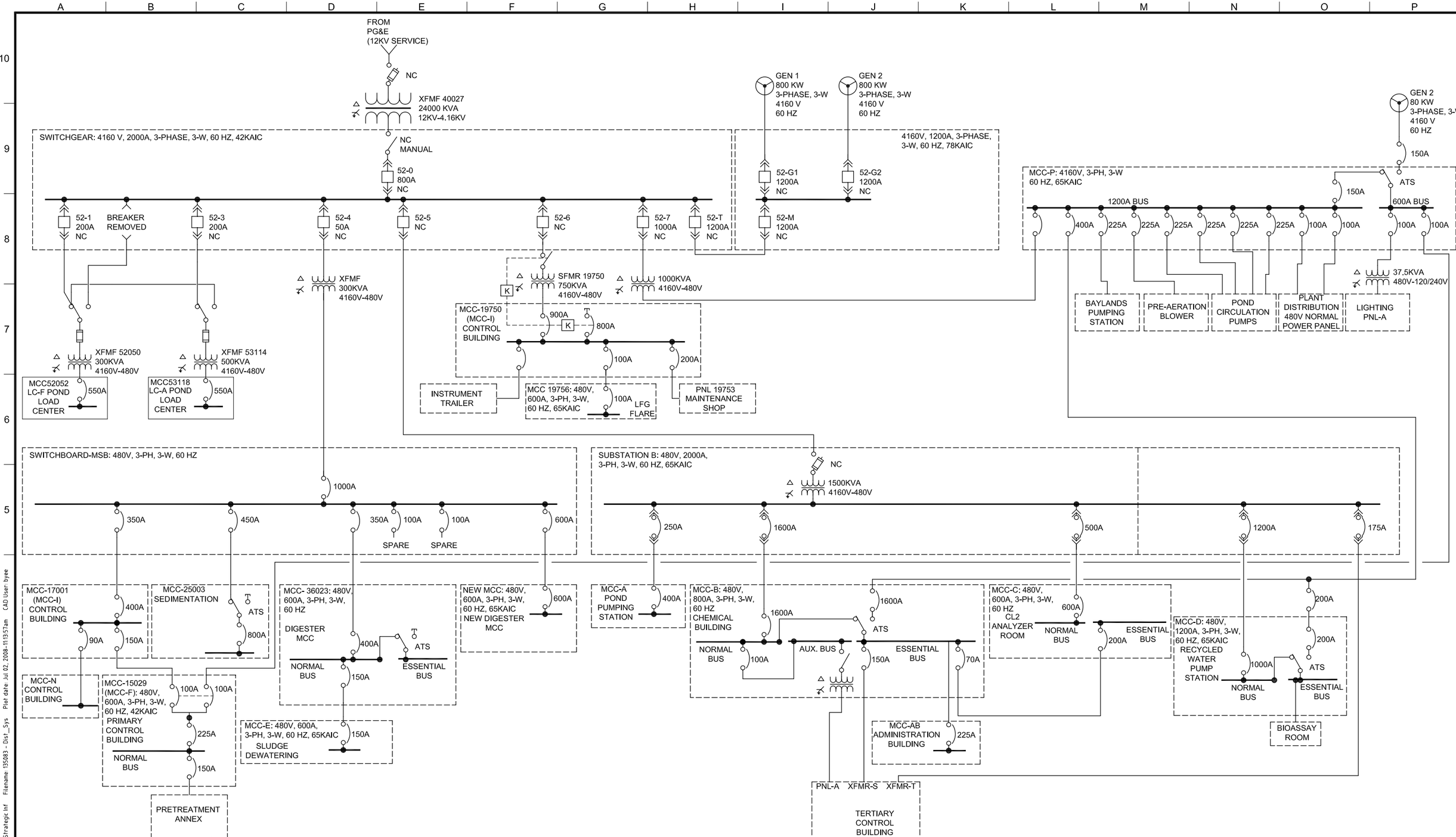

BROWN AND CALDWELL

WALNUT CREEK, CALIFORNIA

SUBMITTED: _____ DATE: _____ (PROJECT MANAGER)

APPROVED: _____ DATE: _____ (BROWN AND CALDWELL)

LINE IS 2 INCHES AT FULL SIZE (IF NOT 2" - SCALE ACCORDINGLY)

DESIGNED: GB
DRAWN: BY
CHECKED:
CHECKED:

EXTERNAL REFERENCE FILES
129995_BDR.dwg
BOLTZ_EIRC.dwg

PRELIMINARY

THIS DRAWING IS NOT VALID FOR CONSTRUCTION PURPOSES UNLESS IT BEARS THE SEAL AND SIGNATURE OF A DULY REGISTERED PROFESSIONAL

GREGG ALAN BOLTZ
ENGINEER-IN-RESPONSIBLE CHARGE
E14094
CALIFORNIA REGISTRATION NUMBER

REVISIONS

ZONE	REV.	DESCRIPTION	BY	DATE	APP.

CITY OF SUNNYVALE, SUNNYVALE, CA

SUNNYVALE STRATEGIC INFRASTRUCTURE PLAN

ELECTRICAL

ELECTRICAL POWER DISTRIBUTION SYSTEM SINGLE LINE DIAGRAM

FILENAME: 135083 - Dist_Sys
BC PROJECT NUMBER: 135083
SCALE: NO SCALE
DRAWING NUMBER: FIG-1
SHEET NUMBER: 1 OF 5

Photo Image Filename: | Path: P:\135000\135083 - Sunnyvale Strategic Inf Filename: 135083 - Dist_Sys Plot date: Jul 02, 2008-11:13:57am CAD User: byee

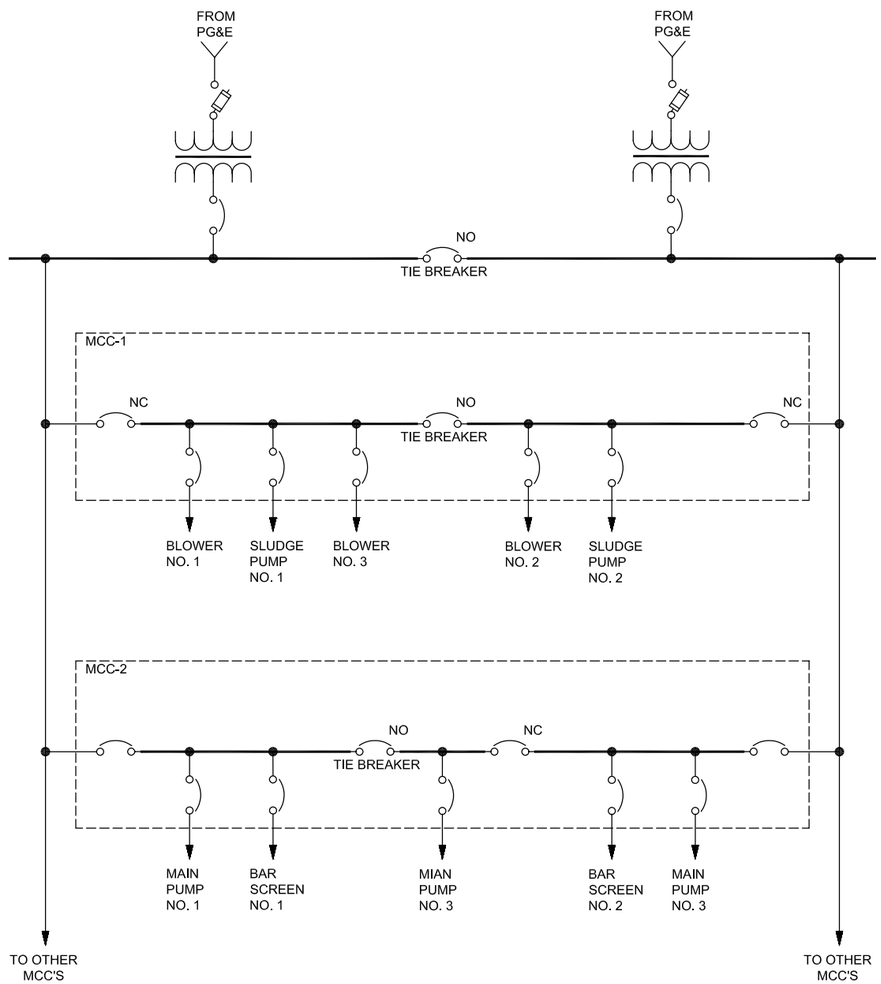

FEEDER DISTRIBUTION AND POWER TRANSFER
(EPA FIGURE 1)
DESIGN CRITERIA FOR MECHANICAL, ELECTRICAL, AND FLUID SYSTEM AND COMPONENT RELIABILITY
(DOCUMENTEPA-430-99-74-001).

LEGEND:

MCC-	MOTOR CONTROL CENTER
NO	NORMALY OPEN
NC	NORMALY CLOSED

BROWN AND CALDWELL

WALNUT CREEK, CALIFORNIA

SUBMITTED: _____ DATE: _____
PROJECT MANAGER

APPROVED: _____ DATE: _____
BROWN AND CALDWELL

LINE IS 2 INCHES AT FULL SIZE (IF NOT 2" - SCALE ACCORDINGLY)

DESIGNED: GB
DRAWN: BY
CHECKED:
CHECKED:

EXTERNAL REFERENCE FILES
129095_BDR.dwg
BOLTZ_EIRC.dwg

PRELIMINARY

THIS DRAWING IS NOT VALID FOR CONSTRUCTION PURPOSES UNLESS IT BEARS THE SEAL AND SIGNATURE OF A DULY REGISTERED PROFESSIONAL

GREGG ALAN BOLTZ
ENGINEER-IN-RESPONSIBLE CHARGE
E14094
CALIFORNIA REGISTRATION NUMBER

REVISIONS

ZONE	REV.	DESCRIPTION	BY	DATE	APP.

CITY OF SUNNYVALE, SUNNYVALE, CA

SUNNYVALE
STRATEGIC INFRASTRUCTURE
PLAN

ELECTRICAL

EPA FIGURE 1
FEEDER DISTRIBUTION AND
POWER TRANSFER
SINGLE LINE DIAGRAM

FILENAME 135083 - Dist_Sys
BC PROJECT NUMBER 135083
SCALE NO SCALE
DRAWING NUMBER FIG-2
SHEET NUMBER 2 OF 5

Photo Image Filename: | Path: P:\135000\135083 - Sunnyvale Strategic Inf Filename: 135083 - Dist_Sys Plot date: Jul 01, 2008-10:02:40am CAD User: byee

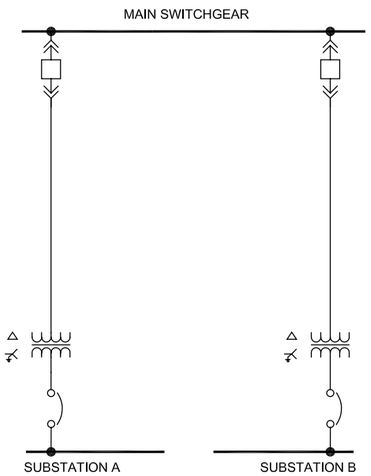

SYSTEM 1: SIMPLE RADIAL SYSTEM

PROS:

1. LEAST EXPENSIVE.

CONS:

1. MULTIPLE SINGEL POINT FAILURES.
2. NO REDUNDANCY.
3. NO FLEXIBILITY
3. NOT VERY RELIABLE.

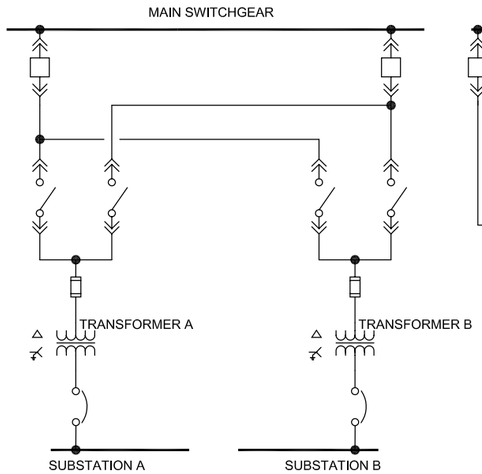

SYSTEM 2: PRIMARY SELECTIVE SYSTEM WITH SECONDARY RADIAL SYSTEM

PROS:

1. MORE RELIABLE THEN SIMPLE RADIAL SYSTEM.
2. SUBSTATION A AND B BOTH HAVE A BACKUP SOURCE FOR FAILURE ON PRIMARY SOURCE.

CONS:

1. COST MORE THEN SIMPLE RADIAL

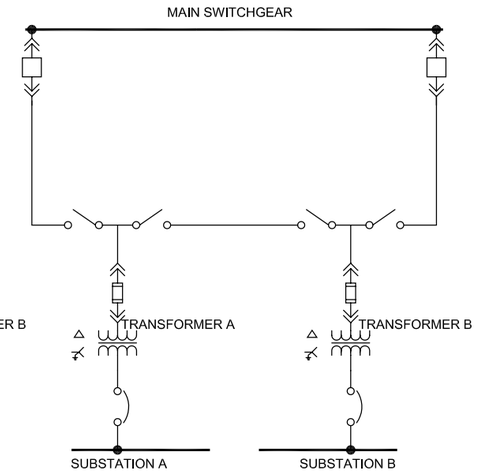

SYSTEM 3: PRIMARY LOOP SYSTEM WITH SECONDARY RADIAL SYSTEM

PROS:

1. MORE FLEXIBLE THEN PRIMARY SELECTIVE SYSTEM.
2. MORE RELIABLE AND FLEXIBLE THEN SIMPLE RADIAL SYSTEM.
3. SUBSTATION A AND B BOTH HAVE A BACKUP SOURCE FOR FAILURE ON PRIMARY SOURCE.
4. HIGH RELIABILITY MAY JUSTIFY THE COST.

CONS:

1. COST MORE THEN SIMPLE RADIAL

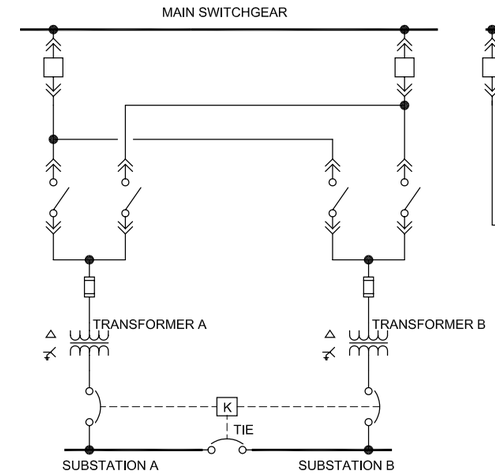

SYSTEM 4: PRIMARY SELECTIVE SYSTEM WITH SECONDARY SELECTIVE SYSTEM

PROS:

1. SAME PROS AS THE PRIMARY SELECTIVE SYSTEM
2. QUICK RESTORATION OF SERVICE IF ONE OF THE TRANSFORMERS FAILS.
3. MORE FLEXIBILITY FOR MAINTENANCE (IE:TRANSFORMER, FUSE, CABLE)

CONS:

1. COST MORE THEN SIMPLE RADIAL
2. COST IS HIGHER BECAUSE TRANSFORMERS MUST BE SIZED LARGER TO CARRY LOAD ON SUBSTATION A AND B.
3. COST IS HIGHER BECAUSE BUSSES IN SUBSTATION MUST BE SIZED TO CARRY LOAD ON SUBSTATION A AND B.
4. WITH LARGER TRANSFORMERS, THE SHORT CIRCUIT FAULT IS HIGHER.

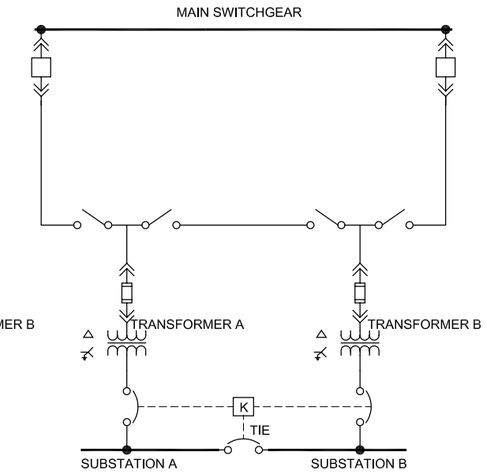

SYSTEM 5: PRIMARY LOOP SYSTEM WITH SECONDARY SELECTIVE SYSTEM

PROS:

1. SAME PROS AS THE PRIMARY SELECTIVE SYSTEM
2. QUICK RESTORATION OF SERVICE IF ONE OF THE TRANSFORMERS FAILS.
3. MORE FLEXIBILITY FOR MAINTENANCE (IE:TRANSFORMER, FUSE, CABLE)

CONS:

1. COST MORE THEN SIMPLE RADIAL
2. COST IS HIGHER BECAUSE TRANSFORMERS MUST BE SIZED LARGER TO CARRY LOAD ON SUBSTATION A AND B.
3. COST IS HIGHER BECAUSE BUSSES IN SUBSTATION MUST BE SIZED TO CARRY LOAD ON SUBSTATION A AND B.
4. WITH LARGER TRANSFORMERS, THE SHORT CIRCUIT FAULT IS HIGHER.

K KEY-INTERLOCK

BROWN AND CALDWELL
WALNUT CREEK, CALIFORNIA

SUBMITTED: _____ DATE: _____
PROJECT MANAGER
APPROVED: _____ DATE: _____
BROWN AND CALDWELL

LINE IS 2 INCHES AT FULL SIZE (IF NOT 2" - SCALE ACCORDINGLY)

DESIGNED: GB
DRAWN: BY
CHECKED:
CHECKED:

EXTERNAL REFERENCE FILES
129095_BDR.dwg
BOLTZ_ERC.dwg

PRELIMINARY
THIS DRAWING IS NOT VALID FOR CONSTRUCTION PURPOSES UNLESS IT BEARS THE SEAL AND SIGNATURE OF A DULY REGISTERED PROFESSIONAL
GREGG ALAN BOLTZ
ENGINEER-IN-RESPONSIBLE CHARGE
E14094
CALIFORNIA REGISTRATION NUMBER

REVISIONS

ZONE	REV.	DESCRIPTION	BY	DATE	APP.

CITY OF SUNNYVALE, SUNNYVALE, CA

SUNNYVALE
STRATEGIC INFRASTRUCTURE
PLAN

ELECTRICAL
COMMON PRIMARY POWER DISTRIBUTION SYSTEM CONFIGURATIONS
SINGLE LINE DIAGRAMS

FILENAME 135083 - Dist_Sys
BC PROJECT NUMBER 135083
SCALE NO SCALE
DRAWING NUMBER FIG-3
SHEET NUMBER 3 OF 5

Photo Image Filename: | Path: P:\135000\135083 - Sunnyvale Strategic Inf Filename: 135083 - Dist_Sys Plot date: Jul 01, 2008-10:03:03am CAD User: byee

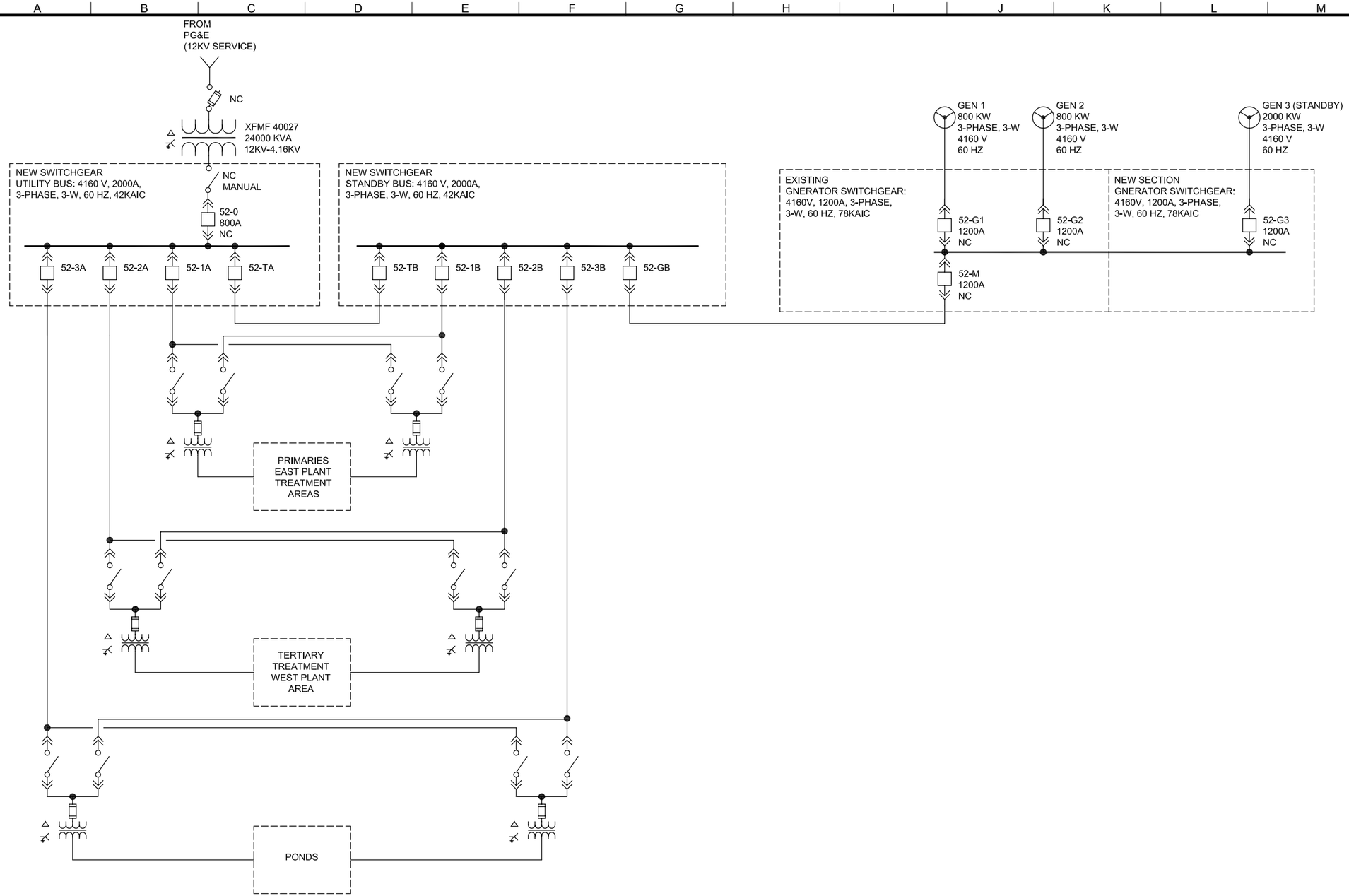

BROWN AND CALDWELL

WALNUT CREEK, CALIFORNIA

SUBMITTED: _____ DATE: _____
PROJECT MANAGER

APPROVED: _____ DATE: _____
BROWN AND CALDWELL

LINE IS 2 INCHES
AT FULL SIZE
(IF NOT 2" - SCALE ACCORDINGLY)

DESIGNED: GB
DRAWN: BY
CHECKED:
CHECKED:

EXTERNAL REFERENCE FILES
129095_BDR.dwg
BOLTZ_EIRC.dwg

PRELIMINARY

THIS DRAWING IS NOT VALID FOR CONSTRUCTION PURPOSES UNLESS IT BEARS THE SEAL AND SIGNATURE OF A DULY REGISTERED PROFESSIONAL

GREGG ALAN BOLTZ
ENGINEER-IN-RESPONSIBLE CHARGE
E14094
CALIFORNIA REGISTRATION NUMBER

REVISIONS

ZONE	REV.	DESCRIPTION	BY	DATE	APP.

CITY OF SUNNYVALE, SUNNYVALE, CA

SUNNYVALE
STRATEGIC INFRASTRUCTURE
PLAN

ELECTRICAL

RECONFIGURED 4.16KV SYSTEM
FOR PRIMARY SELECTIVE DISTRIBUTION
SINGLE LINE DIAGRAM

FILENAME
135083 - Dist_Sys
BC PROJECT NUMBER
135083
SCALE
NO SCALE
DRAWING NUMBER
FIG-4
SHEET NUMBER
4 OF 5

Photo Image Filename: |
Path: P:\135000\135083 - Sunnyvale Strategic Inf Filename: 135083 - Dist_Sys Plot date: Jul 01, 2008-10:03:30am CAD User: byee

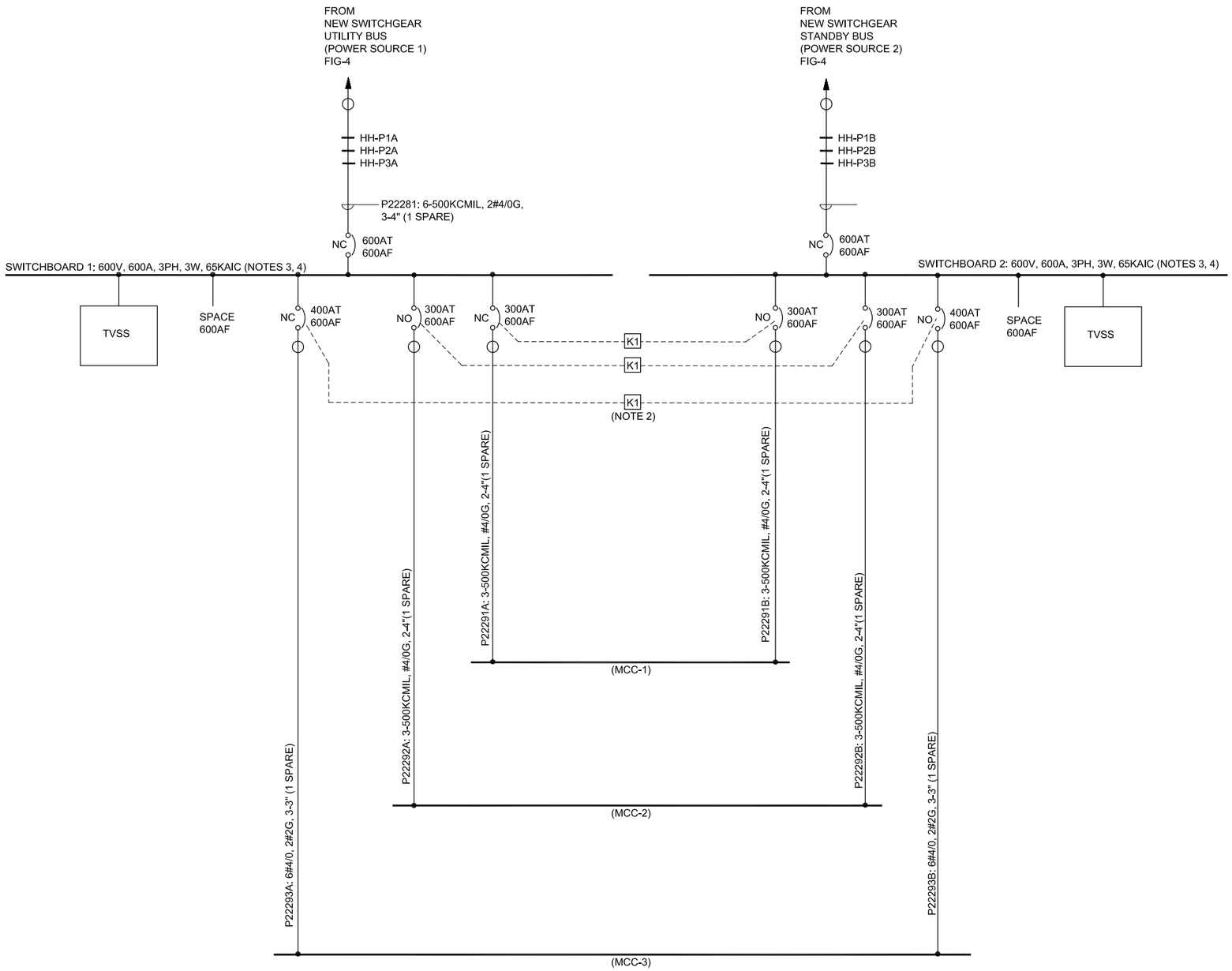

NOTES:

1. FOR LEGEND SEE DRAWING 00-E-002.
2. PROVIDE KIRK KEY INTERLOCK (TYPICAL)
3. PROVIDE SWITCHBOARD PER SECTION 16311 (TYPICAL).
4. ALL BREAKERS IN SWITCHBOARD SHALL HAVE 100% RATING. BREAKERS SHALL HAVE TYPE LSG TRIP UNITS FOR MAINS AND TYPE LSIG FOR FEEDERS (TYPICAL).

INTERLOCK LEGEND

K1 KEY REQUIRED TO CLOSE BREAKER. ONLY ONE BREAKER CLOSED AT A TIME.

BROWN AND CALDWELL

WALNUT CREEK, CALIFORNIA

SUBMITTED: _____ DATE: _____
PROJECT MANAGER

APPROVED: _____ DATE: _____
BROWN AND CALDWELL

LINE IS 2 INCHES AT FULL SIZE (IF NOT 2" - SCALE ACCORDINGLY)

DESIGNED: GB
DRAWN: BY
CHECKED:
CHECKED:

EXTERNAL REFERENCE FILES
129095_BDR.dwg
BOLTZ_EIRC.dwg

PRELIMINARY

THIS DRAWING IS NOT VALID FOR CONSTRUCTION PURPOSES UNLESS IT BEARS THE SEAL AND SIGNATURE OF A DULY REGISTERED PROFESSIONAL

GREGG ALAN BOLTZ
ENGINEER-IN-RESPONSIBLE CHARGE
E14094
CALIFORNIA REGISTRATION NUMBER

REVISIONS

ZONE	REV.	DESCRIPTION	BY	DATE	APP.

CRITICAL LOAD AREA

SUNNYVALE
STRATEGIC INFRASTRUCTURE
PLAN

ELECTRICAL

TYPICAL SECONDARY DISTRIBUTION
CRITICAL LOAD AREA
SINGLE LINE DIAGRAM

FILENAME: 135083 - Dist_Sys
BC PROJECT NUMBER: 135083
SCALE: NO SCALE
DRAWING NUMBER: FIG-5
SHEET NUMBER: 5 OF 5

Photo Image Filename:
Path: P:\135000\135083 - Sunnyvale Strategic Inf Filename: 135083 - Dist_Sys Plot date: Jul 01, 2008-10:03:57am CAD User: byee