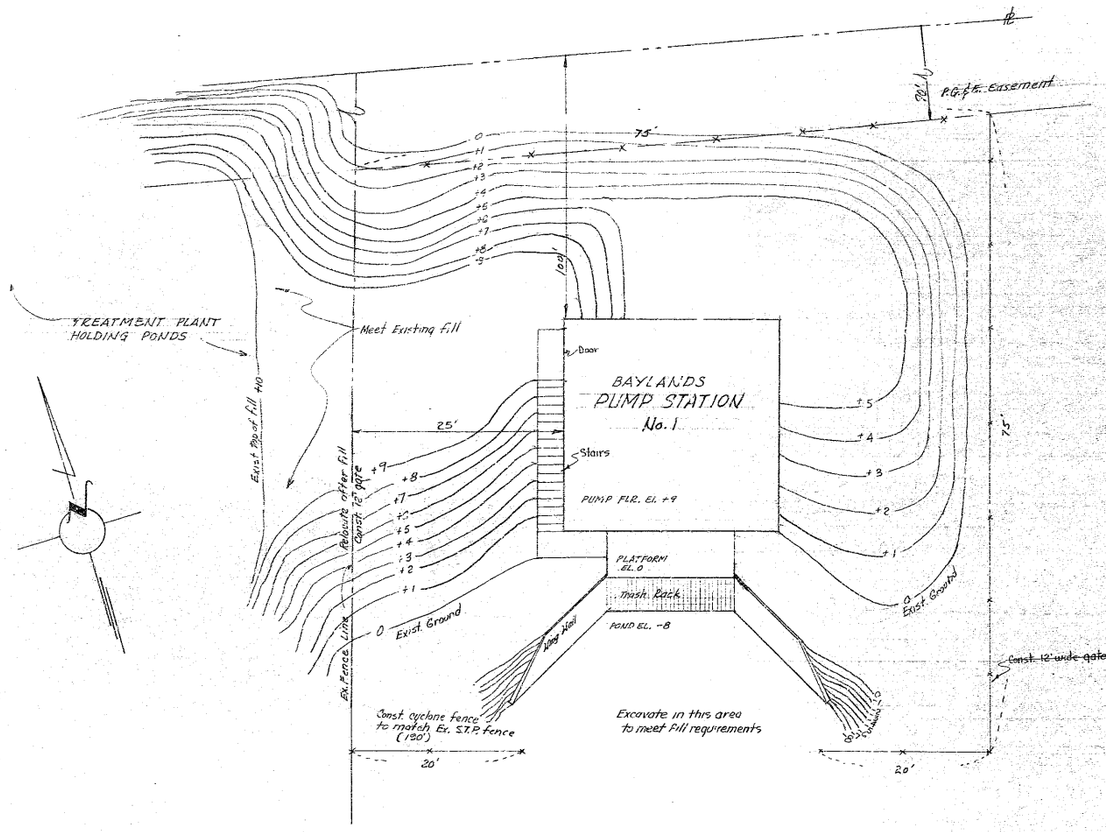

SITE PLAN

1/8" = 1'-0"

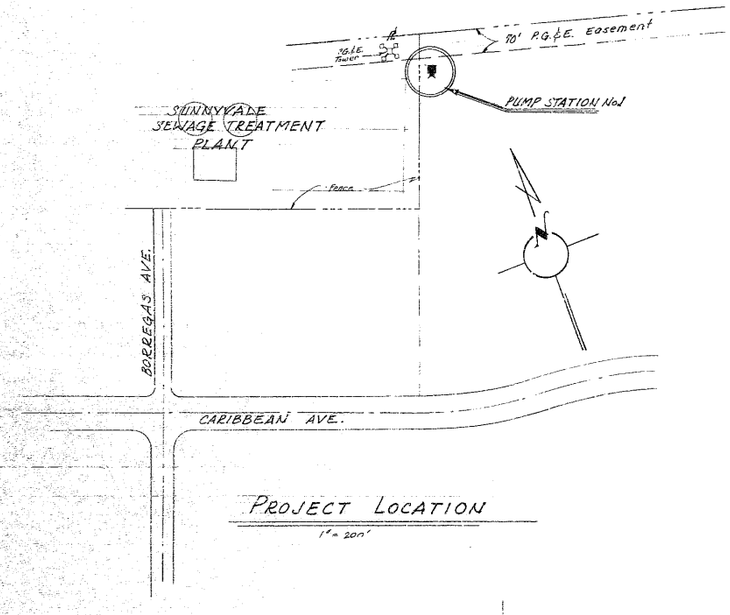

PROJECT LOCATION

1" = 200'

INDEX

SHEET 1	SITE PLAN, PROJ. LOCATION
2	PLANS, ELEV'S, SECTIONS 1 & 2
3	SECTIONS 3 & 4
4	SECTIONS 5 & 6
5	PUMP MOUNTING & MISC. DETAILS
6	PUMP MOUNTING
7	ELECTRICAL PLAN
8	ELECTRICAL DETAILS

DATE ACCEPTED _____

AS BUILT

REVISIONS By ROSEMIER Date 1-10-66

UD-61-14 (1/78)

D.W. & J.J.W. | C. Jones | 7-14-61

R.E. 9265

BAYLANDS PUMP STATION No. 1

as shown

DEPARTMENT OF PUBLIC WORKS
CITY OF SUNNYVALE

SD-86.1

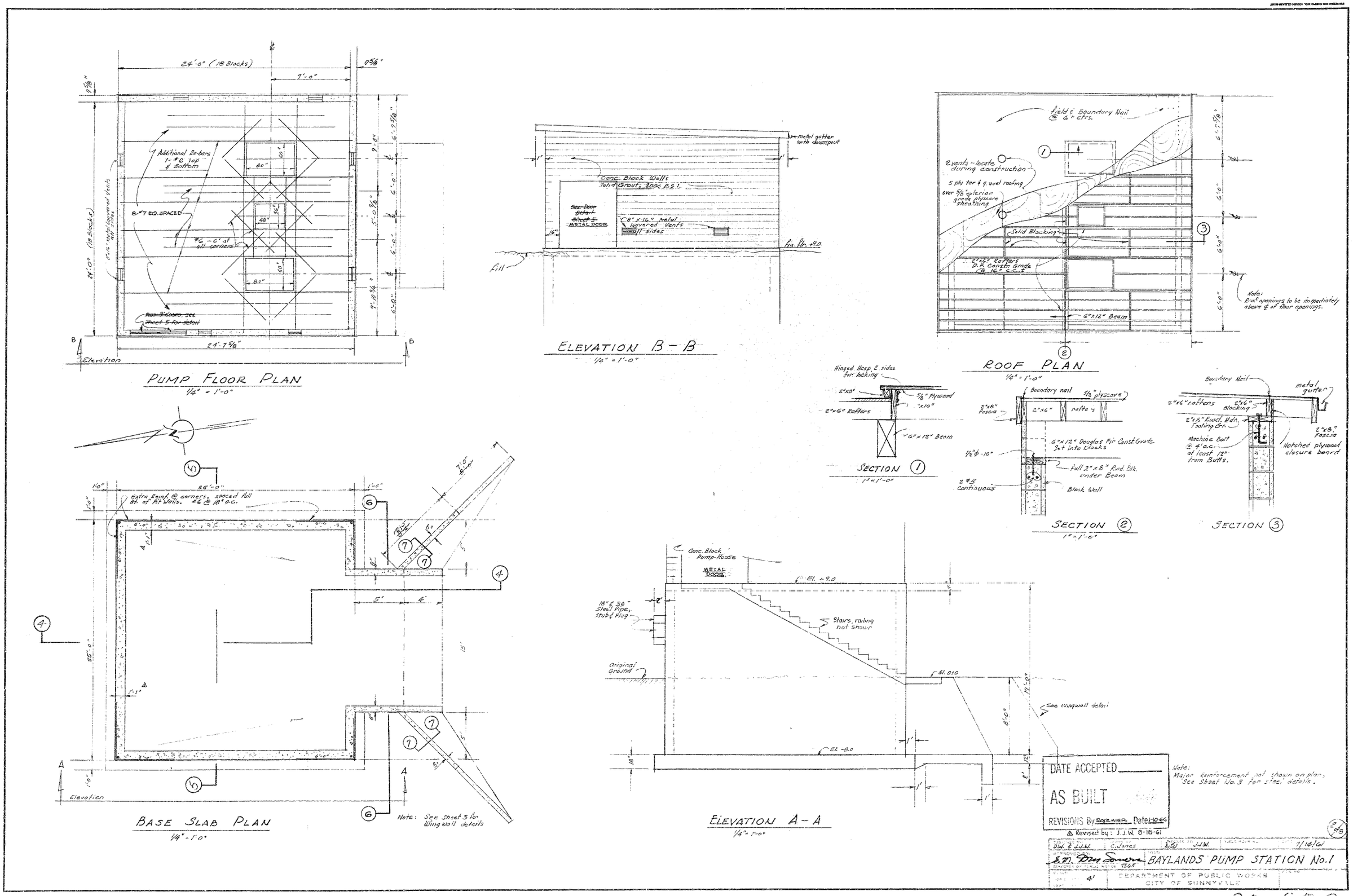

PUMP FLOOR PLAN
1/4" = 1'-0"
24'-0" (18 Blocks)
9'-0"
Additional Re-bars 1-#6 Top & Bottom
8-#7 EQ. SPACED
#6 - 6' at all corners
Two 3' Doors, see Sheet 5 for detail
24'-7 5/8"
Elevation
ELEVATION B - B
1/4" = 1'-0"
metal gutter with downspout
Conc. Block Walls Solid Grout, 2000 P.S.I.
Sec. Door Detail Sheet 5
METAL DOOR
8" x 16" Metal louvered Vents all sides
Fin. Flr. +9.0
Fill
ROOF PLAN
1/4" = 1'-0"
Field & Boundary Nail @ 6" ctrs.
2 vents - locate during construction
5 ply tar & gravel roofing over 5/8" exterior grade plyscore sheathing
Solid Blocking
2"x6" Rafters D.F. Constr. Grade @ 16" c.c.
6"x12" Beam
Note: Proof openings to be immediately above ℄ of floor openings.
SECTION 1
1" = 1'-0"
Hinged Hasp. 2 sides for locking
2"x8"
5/8" Plywood
"x10"
2"x6" Rafters
6"x12" Beam
SECTION 2
1" = 1'-0"
Boundary nail
5/8" plyscore
2"x8" Fascia
2"x6" rafters
6"x12" Douglas Fir Const. Grade Set into Blocks
1/2"Φ-10"
Full 2"x8" Rwd. Blk. under Beam
2 #5 Continuous
Block Wall
SECTION 3
Boundary Nail
metal gutter
2"x6" rafters
2"x6" Blocking
2"x8" Rwd. Hdr. Footing Gr.
2"x8" Fascia
Machine Bolt @ 4' o.c. at least 12" from Butts.
Notched plywood closure board
BASE SLAB PLAN
1/4" = 1'-0"
25'-0"
Extra Reinf. @ corners, spaced full Ht. of Pit Walls. #6 @ 18" o.c.
Elevation
Note: See Sheet 3 for Wing wall details
ELEVATION A - A
1/4" = 1'-0"
Conc. Block Pump-House
METAL DOOR
El. +9.0
18" & 36" Steel Pipe, Stub & Plug
Stairs, railing not shown
Original Ground
El. 0.0
See wingwall detail
El. -8.0
Note: Major Reinforcement not shown on plan; See Sheet No. 3 for steel details.
DATE ACCEPTED
AS BUILT
REVISIONS By Rosemier Date 1-10-64
Revised by: J.J.W. 8-18-61
D.W. & J.J.W.
C. Jones
J.J.W.
7/14/61
BAYLANDS PUMP STATION No. 1
DEPARTMENT OF PUBLIC WORKS
CITY OF SUNNYVALE
4'
SD-86.2

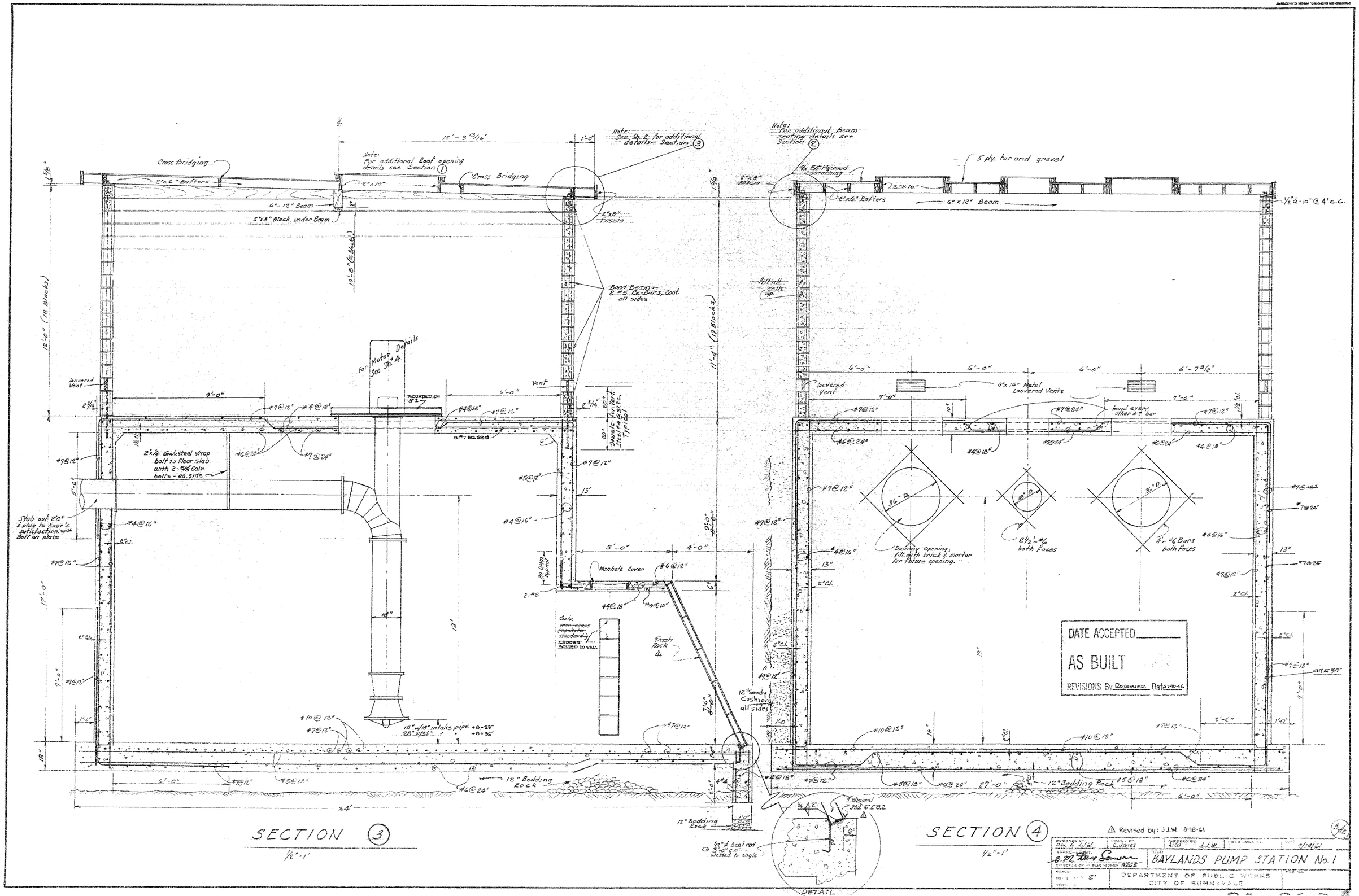

Cross Bridging
2"x6" Rafters
6"x12" Beam
2"x8" Block under Beam
Note: For additional Roof opening details see Section 1
Note: See Sh. 2 for additional details - Section 3
2"x8" Fascia
Band Beam - 2 #5 Re-Bars, Cont. all sides
For Motor Details See Sh. 4
Louvered Vent
Vent
2"x1/4" Galv. steel strap bolt to floor slab with 2-5/8" Galv. bolts - eq. side
Stub out 2'0" & plug to Engr's satisfaction with Bolt on plate
Manhole Cover
Trash Rack
12" Sandy Cushion all sides
15" w/18" intake pipe +8=23"
28" w/36" " +8=36"
12" Bedding Rock
Note: For additional Beam seating details see Section 2
5 ply. tar and gravel
1/2"d-10" @ 4' c.c.
Fill all cells Typ.
8"x16" Metal Louvered Vents
bend every other #7 bar
Dummy opening, fill with brick & mortar for future opening.
2 1/2"-#6 both faces
4"-#6 Bars both faces
DATE ACCEPTED
AS BUILT
REVISIONS By Rosemier Date 1-10-66
SECTION 3
1/2"=1'
SECTION 4
1/2"=1'
DETAIL
Revised by: J.J.W. 8-18-61
BAYLANDS PUMP STATION No. 1
DEPARTMENT OF PUBLIC WORKS
CITY OF SUNNYVALE
SD-86.3

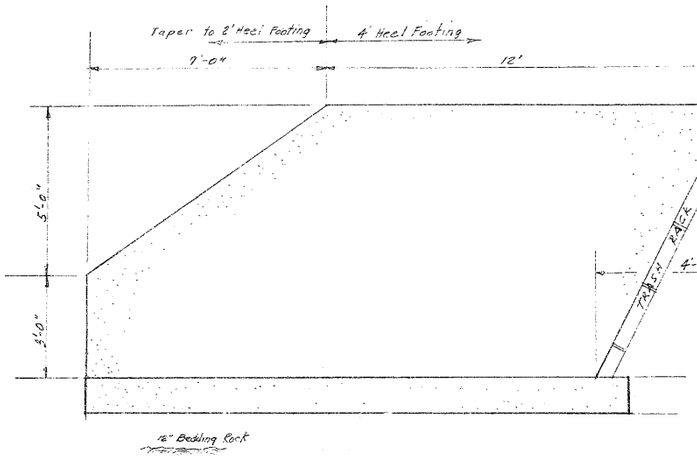

WINGWALL - PROFILE

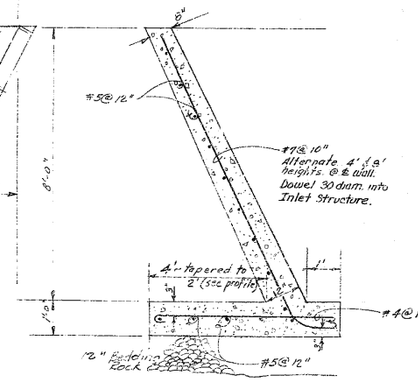

SECTION 7-7

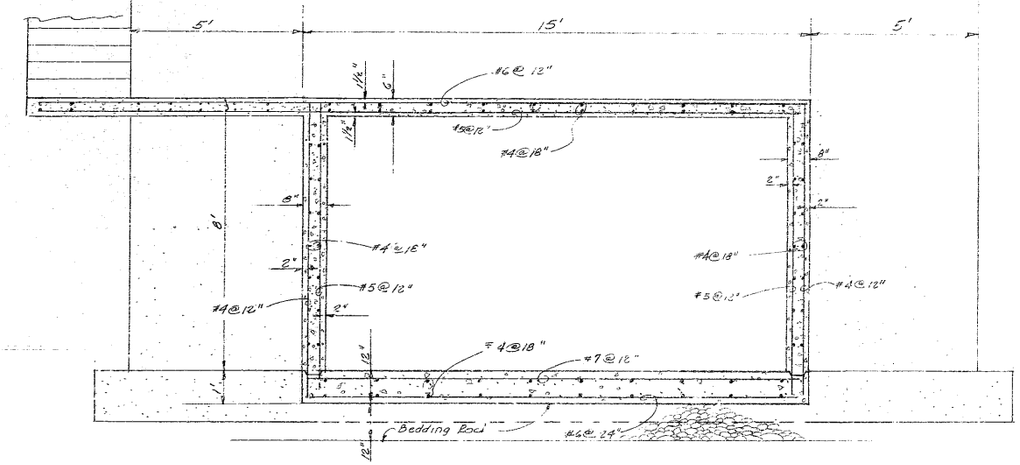

SECTION 6-6

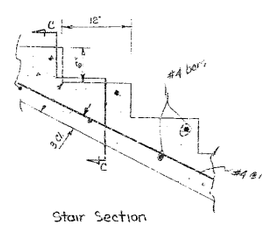

Stair Section
1"-1'

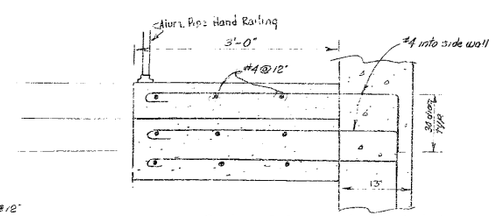

Section C-C
1"=1'

(main steel not shown in side wall)

Note: Aluminum Pipe Hand Railing shall be 1½" diam., 32" high, Double railing, 25' long with posts @ 6'-6" centers.

DATE ACCEPTED _____

AS BUILT

REVISIONS By Rosemier Date 1-10-66

D.W. & J.J.W.	C. Jones	R.O.	J.J.W.	8/8/61
S.M. Dan Sonnen 9265	BAYLANDS PUMP STATION No. 1			
2'	DEPARTMENT OF PUBLIC WORKS CITY OF SUNNYVALE			

SD-36-4

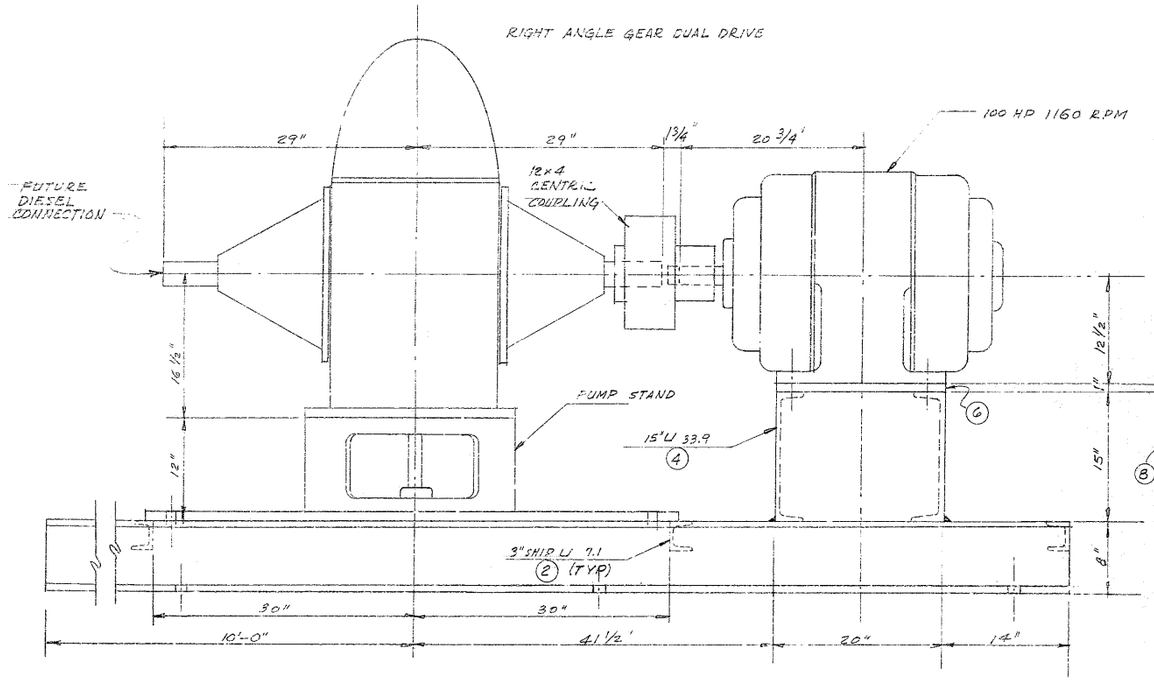

ELEVATION
1 1/2" = 1'

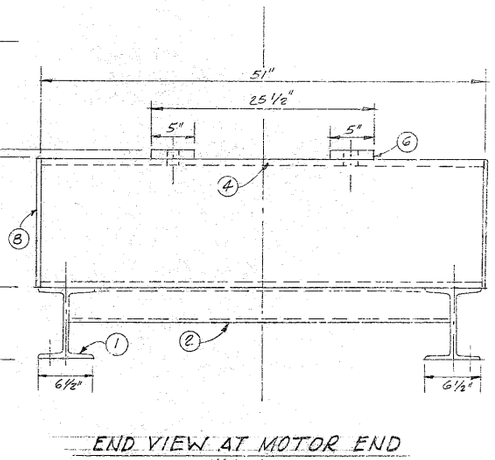

END VIEW AT MOTOR END
1 1/2" = 1'

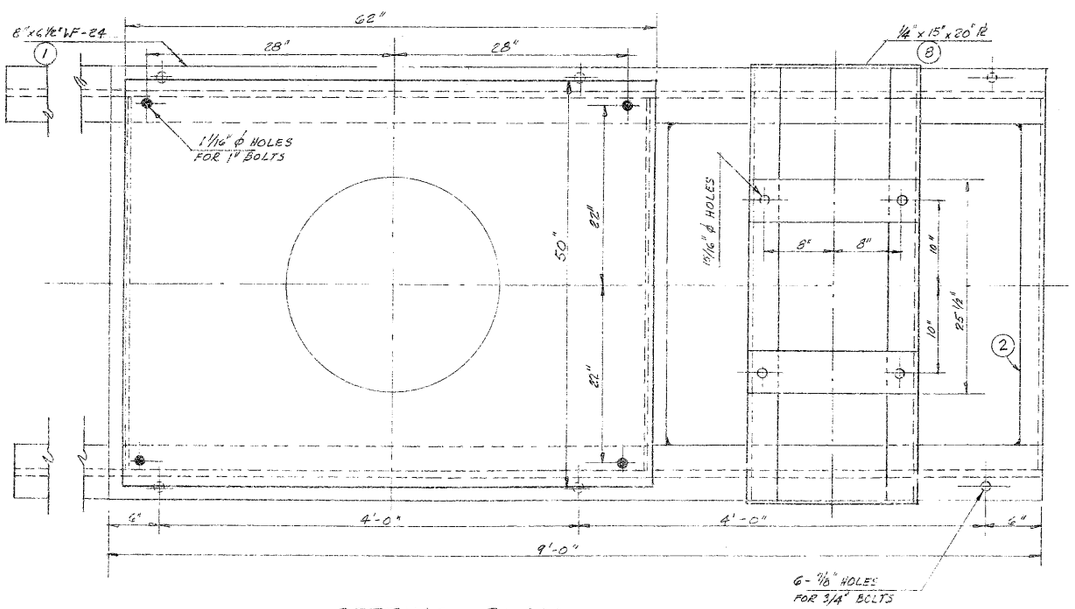

SETTING PLAN

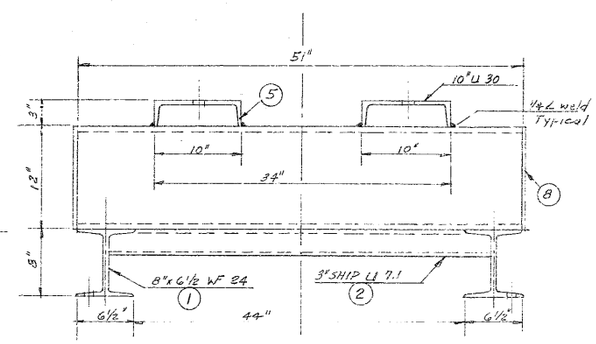

END VIEW AT ENGINE END
1 1/2" = 1'

Note:
CONTRACTOR TO CHECK ALL DIMENSIONS WITH MANUFACTURERS CERTIFIED DRAWINGS PRIOR TO FABRICATION. To be approved by Engineer.

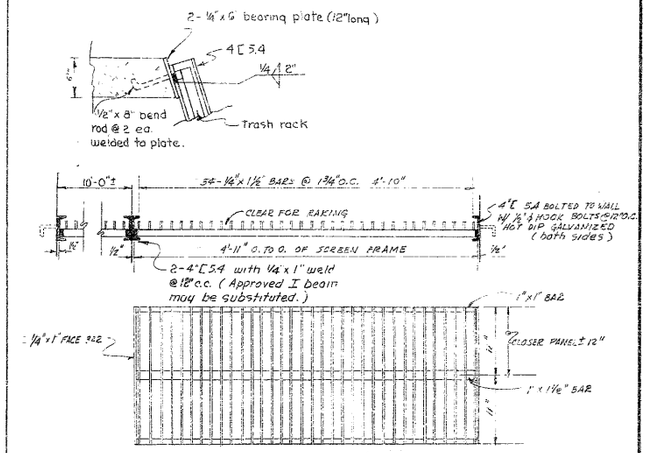

NOTE: ALL BARS TO BE MILD STEEL & TO BE WELDED AT ALL INTERSECTIONS, FINISHED SCREEN TO BE HOT DIP GALVANIZED & PAINTED WITH ASPHALT.
APPROX. WT. 165#
15 Required (22" x 59")

TRASH SCREEN DETAIL
1" = 1'

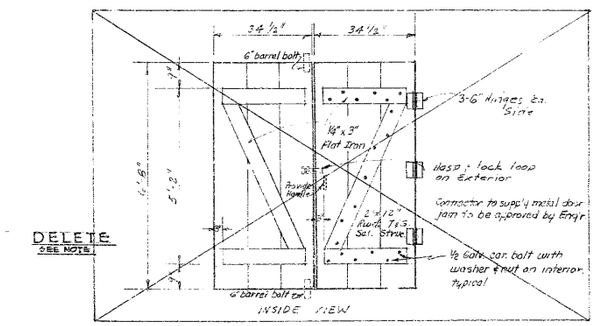

DELETE
SEE NOTE

EXTERIOR DOORS
1" = 2'

NOTE:
EXTERIOR DOORS SHALL BE METAL PER PUMP STN #1.
DETAILS THIS SHEET PER "JOHNSON PUMP INFO. & AS BUILT.

DATE ACCEPTED _____
AS BUILT
REVISIONS By Rosemier Date 1-10-66
Revised by: J.J.W. 8-18-61

DESIGNED BY D.W.L.J.J.W.	DRAWN BY C. Jones	CHECKED BY J.J.W.	FIELD BOOK NO.	DATE 7/14/61
APPROVED BY J.M. Dan Somers, DIRECTOR OF PUBLIC WORKS 9265		TITLE BAYLANDS PUMP STATION No. 1		
SCALE AS SHOWN	DEPARTMENT OF PUBLIC WORKS CITY OF SUNNYVALE		FILE NO.	

5/8

SD-86.5

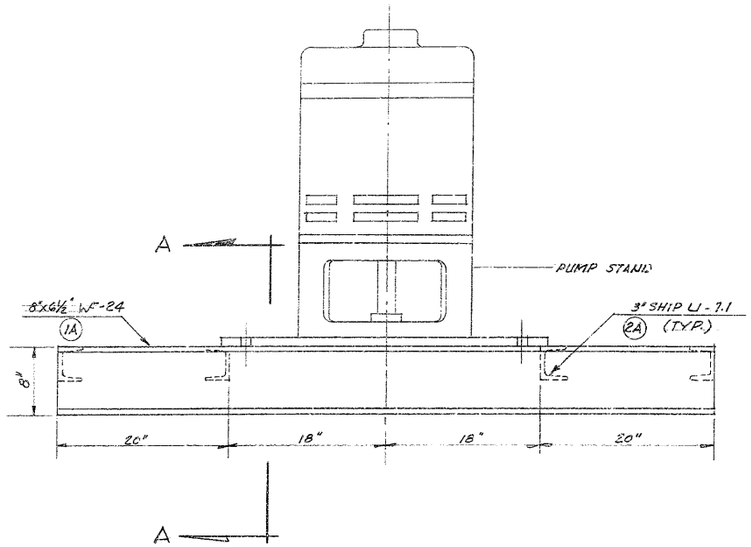

ELEVATION
1½"=1'

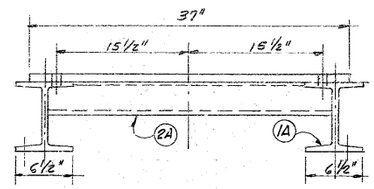

SECTION A-A
1½"=1'

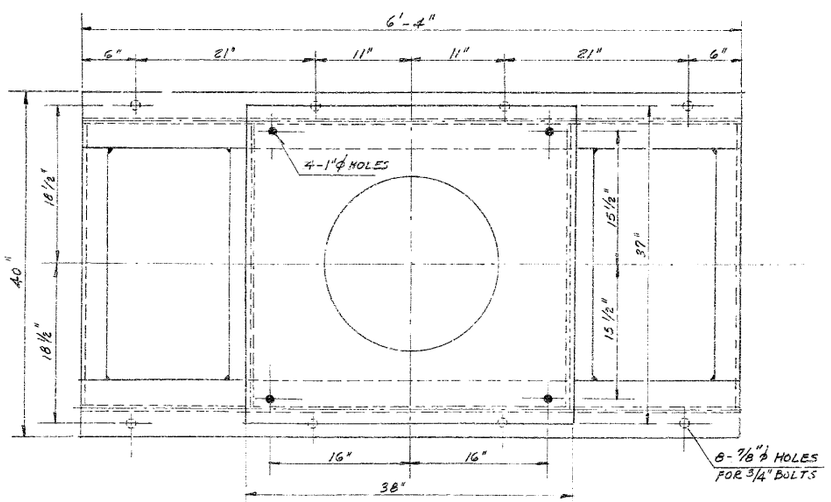

SETTING PLAN
FOR 18" FAIRBANKS MORSE & CO. 6310 PROPELLER PUMP OR APPROVED EQUAL
1½"=1'

NOTE:
CONTRACTOR TO CHECK DIMENSIONS WITH MANUFACTURERS CERTIFIED DRAWINGS PRIOR TO FABRICATION.
To be approved by Engineer.

NOTE:
DETAILS THIS SHEET PER JOHNSON PUMP & AS BUILT.

DATE ACCEPTED _____
AS BUILT
REVISIONS By ROSEMIER Date 1-10-66

D.W. & J.J.W.	C. Jones	R.W.	J.J.W.	1/21/61
S.M. Rosemier R.E. 7265	BAYLANDS PUMP STATION No. 1			
	DEPARTMENT OF PUBLIC WORKS CITY OF SUNNYVALE			

SD-86.6

NAMEPLATE & EQUIPMENT SCHEDULE

No.	Nameplate	Equipment
N-1	Main Circuit Breaker	400 amp JKL frame 400 amp rating - 3 pole
N-2	Utility Circuit Breaker	20 amp F frame 2 pole - 440 v.
N-3	Utility Transformer	3 KW 440 v/220-110v
N-4 thru N-11	Pump #1 Control Pump #2 Control Pump #3 Control Lights Receptacles Spare Circuit Spare Circuit Spare Circuit	On-Off switches 20 amp.
N-12	Pump Control Relays	B-W relays Type DH 110 v. primary 220 v. secondary
N-13	Pump #1 Circuit Breaker	100 amp F. frame 100 amp rating - 3 pole
N-14	Pump #2 Circuit Breaker	225 amp JK frame 225 amp rating - 3 pole
N-15	Pump #1 Starter	Size 3 - 30 HP Magnetic, Full-voltage, non reversing, starter
N-16	Pump #2 Starter	Size 4 - 100 HP Magnetic, Full voltage, non reversing, starter
N-17	---	Space for future 100 HP circuit breaker JK frame
N-18	---	Space for future 100 HP Size 4 starter
N-19	Pump #1	HOA selector switch 440 v.
N-20	Pump #2	HOA selector switch 440 v.
N-21	Pump #3	HOA selector switch 440 v.
N-22	RTM Pump #1	Running Time Meter
N-23	RTM Pump #2	Running Time Meter
N-24	RTM Pump #3	Running Time Meter

Note - Alternate Control Center containing Current Transformer & Meter enclosure in lieu of seperate Motor Control Center and outdoor weatherproof Current Transformer & Meter enclosures.

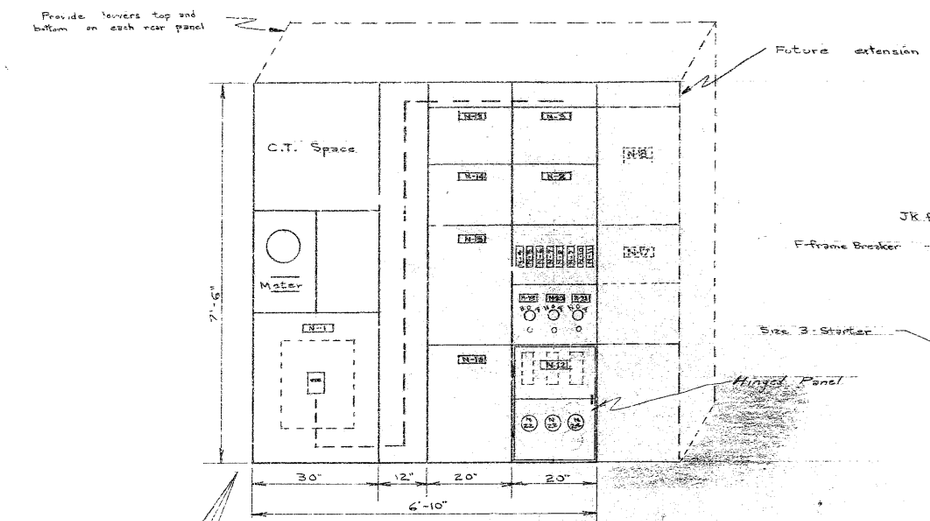

ALTERNATE CONTROL CENTER

Scale 3/4" = 1'-0"

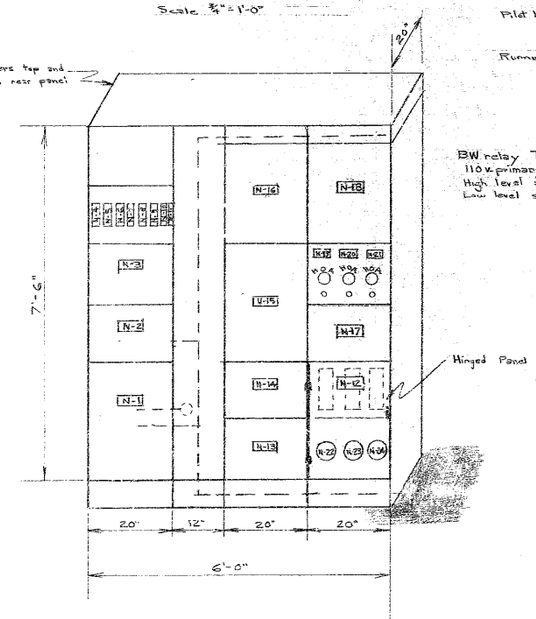

MOTOR CONTROL CENTER

Scale 3/4" = 1'-0"

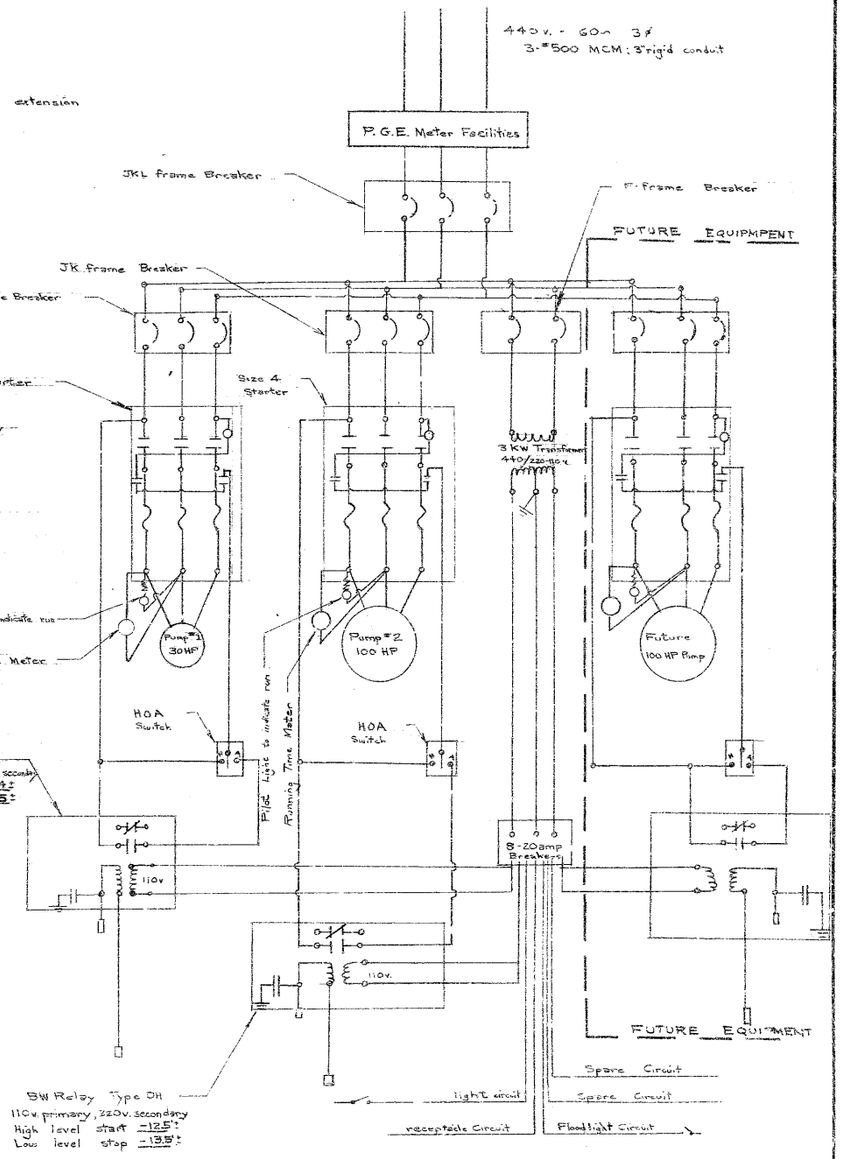

WIRING DIAGRAM

DATE ACCEPTED _____

AS BUILT

REVISIONS By Rosemier Date 1-10-66

DESIGNED BY: F.R.M.	DRAWN BY: F.R.M.	CHECKED BY:	DATE: 7-27-61
APPROVED BY: S. M. Paul Somers, DIRECTOR OF PUBLIC WORKS	TITLE: BAYLANDS PUMP STATION No. 1		
SCALE: As Shown HORIZ. 1"= VERT. 1"=	DEPARTMENT OF PUBLIC WORKS CITY OF SUNNYVALE		FILE NO.

SD-86.7

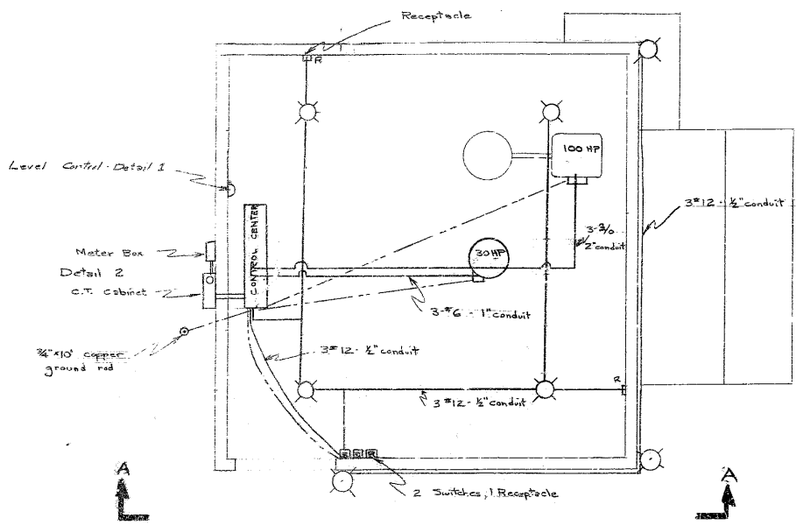

PLAN
¼" = 1'-0"

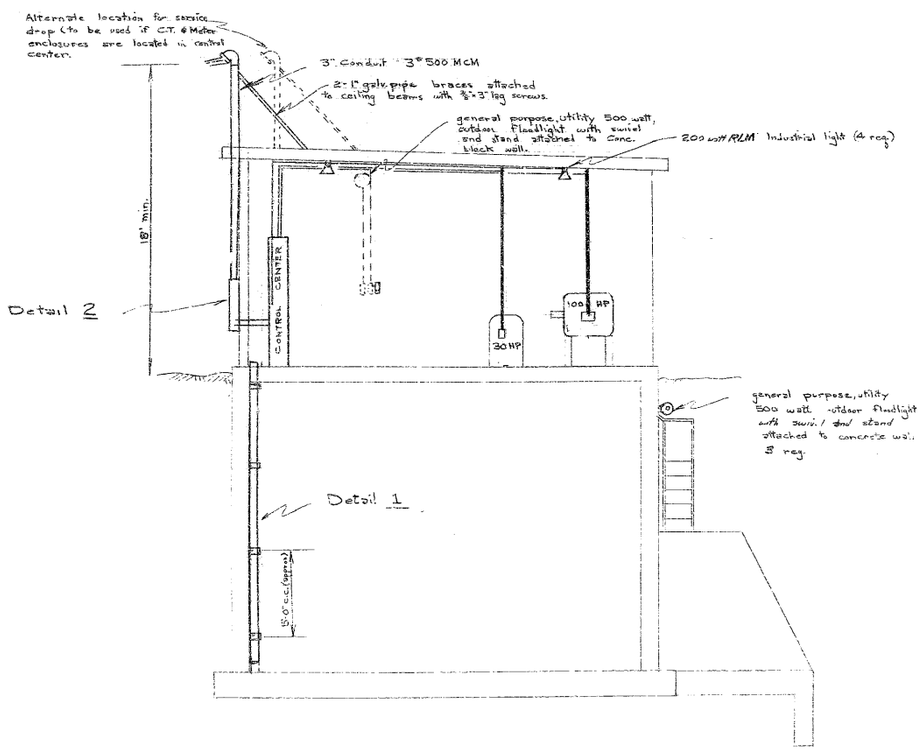

ELEV. Sec A-A
¼" = 1'-0"

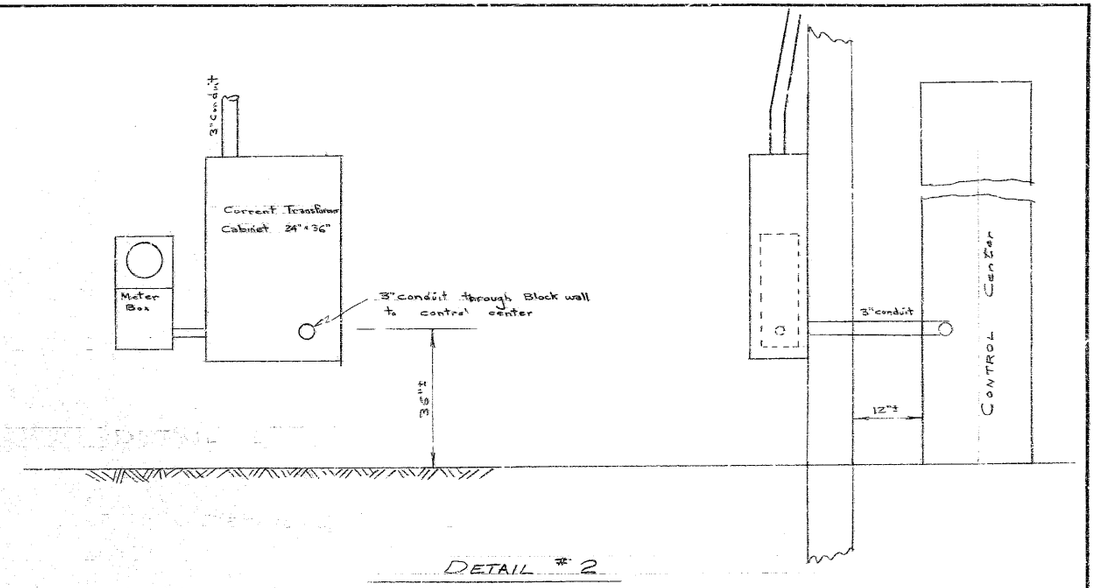

DETAIL #2

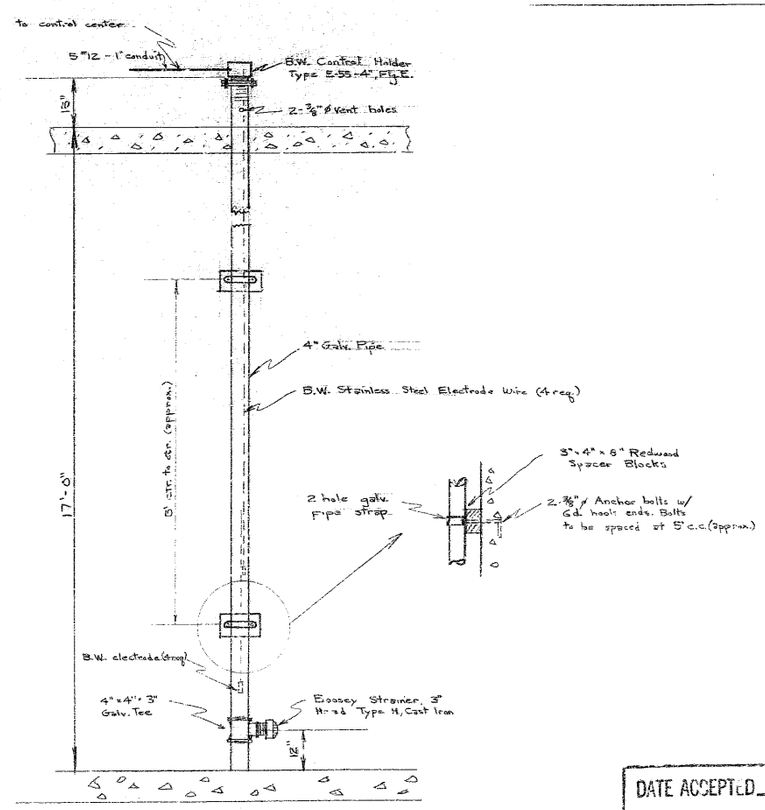

LEVEL CONTROL - (2 Req.)
DETAIL 1

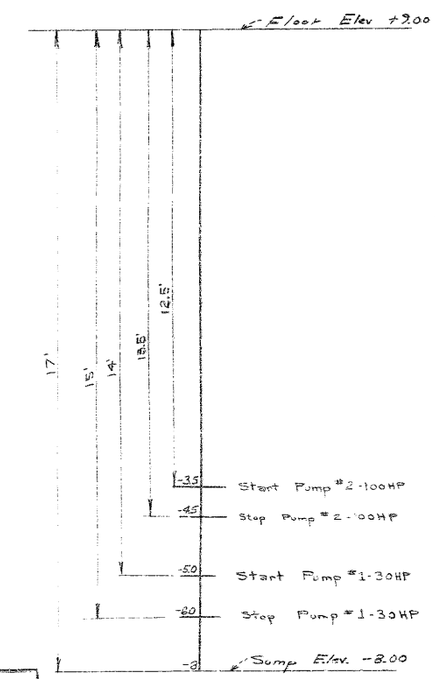

PUMP CONTROL LEVELS.

DATE ACCEPTED _____
AS BUILT
REVISIONS By Rosemier Date 11-10-66

DESIGNED BY: RRM	DRAWN BY: RRM	CHECKED BY:	FIELD BOOK NO.	DATE: 7-27-61
APPROVED BY: S.N. Ross Sowers DIRECTOR OF PUBLIC WORKS 9265	TITLE: BAYLANDS PUMP STATION No. 1			
SCALE: As shown HORIZ. 1"= VERT. 1"=	DEPARTMENT OF PUBLIC WORKS CITY OF SUNNYVALE			FILE NO.

SD-86-8