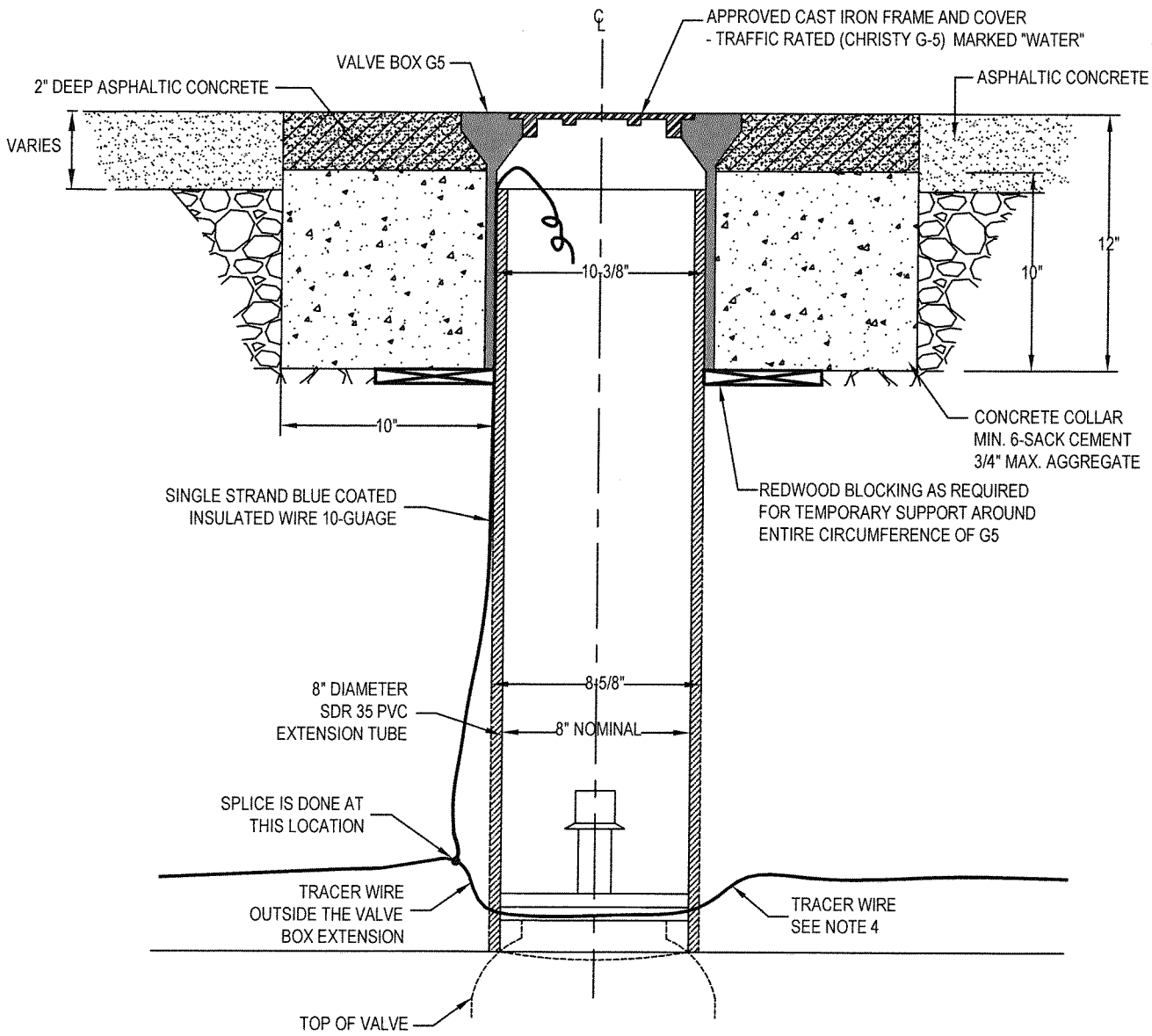

NOTES:

1. PLACE EXTENSION KEY INSIDE VALVE BOX EXTENSION WHEN VALVE KEY DEPTH IS GREATER THAN 5'-0"
2. LID CASTING FOR POTABLE WATER SYSTEM SHALL INCLUDE DESIGNATION "WATER". COVERS MUST BE G-5 CHRISTY BOX.
3. LID CASTING FOR RECYCLED WATER SYSTEM SHALL INCLUDE DESIGNATION "RECLAIMED WATER" PAINTED PURPLE AND 1" LETTERS "RW".
4. SEE CITY STD DETAIL FOR THE INSTALLATION OF TRACER WIRE.

WATER VALVE BOX INSTALLATION	APPROVED BY:	
	DATE: JUNE 30, 2006 **REVISED: MAY 2015**	DWG. **1B**

FIRE HYDRANT ASSEMBLY

HYDRANT NOTES:

1. EXTRA WIDE MONOLITHIC SIDEWALK. X = 24" (FACE OF CURB TO CENTER OF HYDRANT) (Y DOES NOT APPLY) PROVIDED MIN CLEAR WIDTH BETWEEN BACK OF HYDRANT AND BACK OF WALK IS 4'-0"F. THIS MIN WIDTH CANNOT BE ACHIEVED, SEE NOTE 3.
2.. NON MONOLITHIC SIDEWALK. X = 24" (FACE OF CURB TO CENTER OF HYDRANT) (Y DOES NOT APPLY)
3. MONOLITHIC SIDEWALK. Y = 12" (BACK OF SIDEWALK TO CENTER OF HYDRANT) (X DOES NOT APPLY)
4. NO SIDEWALK. X = 6'-6" (FACE OF CURB TO CENTER OF HYDRANT) (Y DOES NOT APPLY)
5. SEE DETAIL BELOW FOR THE INSTALLATION OF TRACER WIRE.

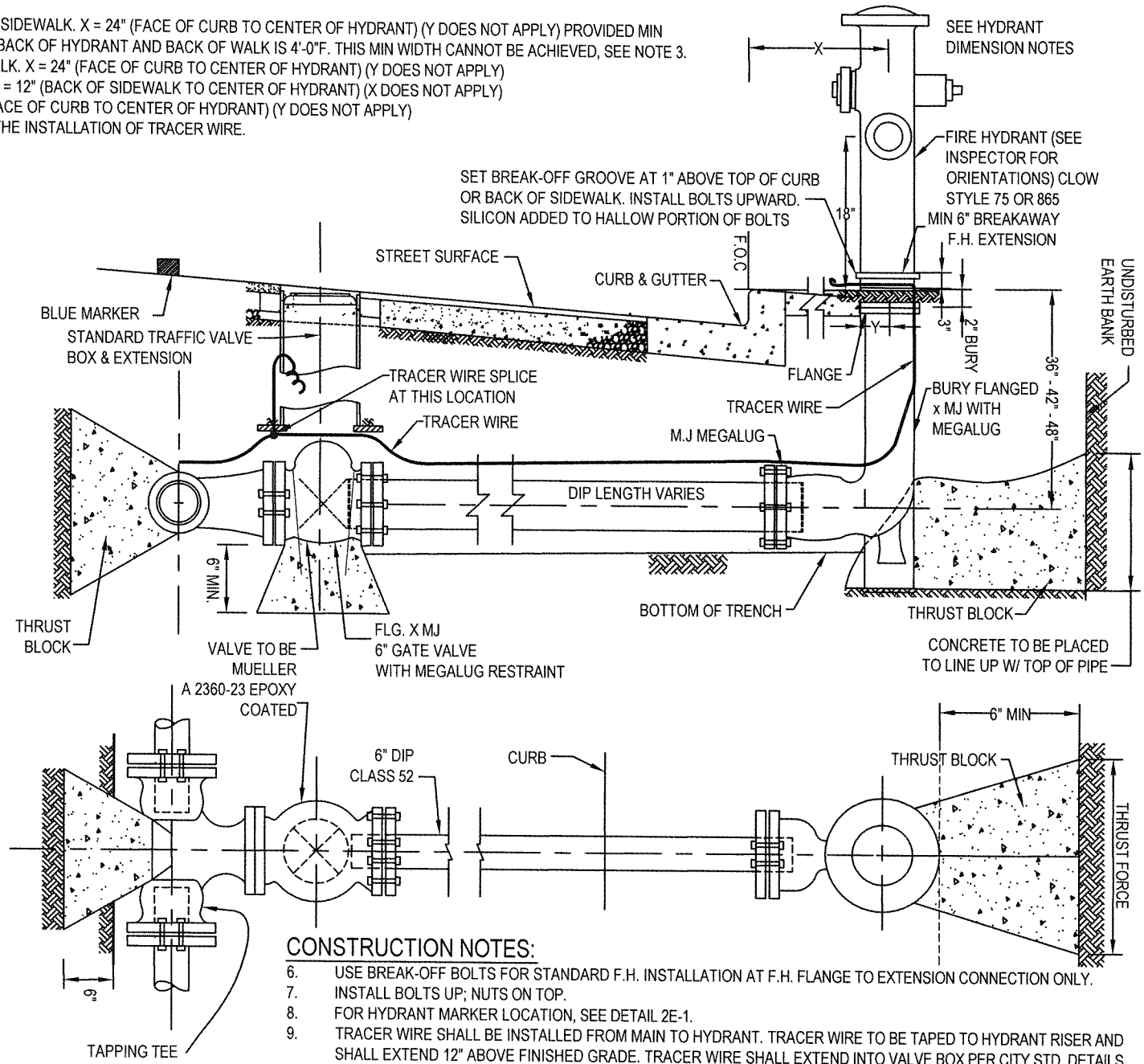

CURB DETAIL AT FIRE HYDRANT LOCATIONS

CONSTRUCTION NOTES:

6. USE BREAK-OFF BOLTS FOR STANDARD F.H. INSTALLATION AT F.H. FLANGE TO EXTENSION CONNECTION ONLY.
7. INSTALL BOLTS UP; NUTS ON TOP.
8. FOR HYDRANT MARKER LOCATION, SEE DETAIL 2E-1.
9. TRACER WIRE SHALL BE INSTALLED FROM MAIN TO HYDRANT. TRACER WIRE TO BE TAPED TO HYDRANT RISER AND SHALL EXTEND 12" ABOVE FINISHED GRADE. TRACER WIRE SHALL EXTEND INTO VALVE BOX PER CITY STD. DETAILS.
10. CONCRETE SHALL NOT EXTEND BEYOND FACE OF BELL AND JOINTS. BOLTS / NUTS TO REMAIN FREE OF CONCRETE.
11. ALL BELOW GRADE DIP SHALL BE POLY WRAPPED; ABOVE GRADE SHALL BE PAINTED.
12. ALL JOINTS ARE TO BE EXPOXY COATED MEGA-LUG.

DATE: JUNE 30, 2006
REVISED: MAY 2015

APPROVED BY:

DWG. 2B

HYDRANT LOCATIONS

REFER TO DETAIL 2B

③ HYDRANT REQUIREMENTS

CLOW/RICH NO. 75

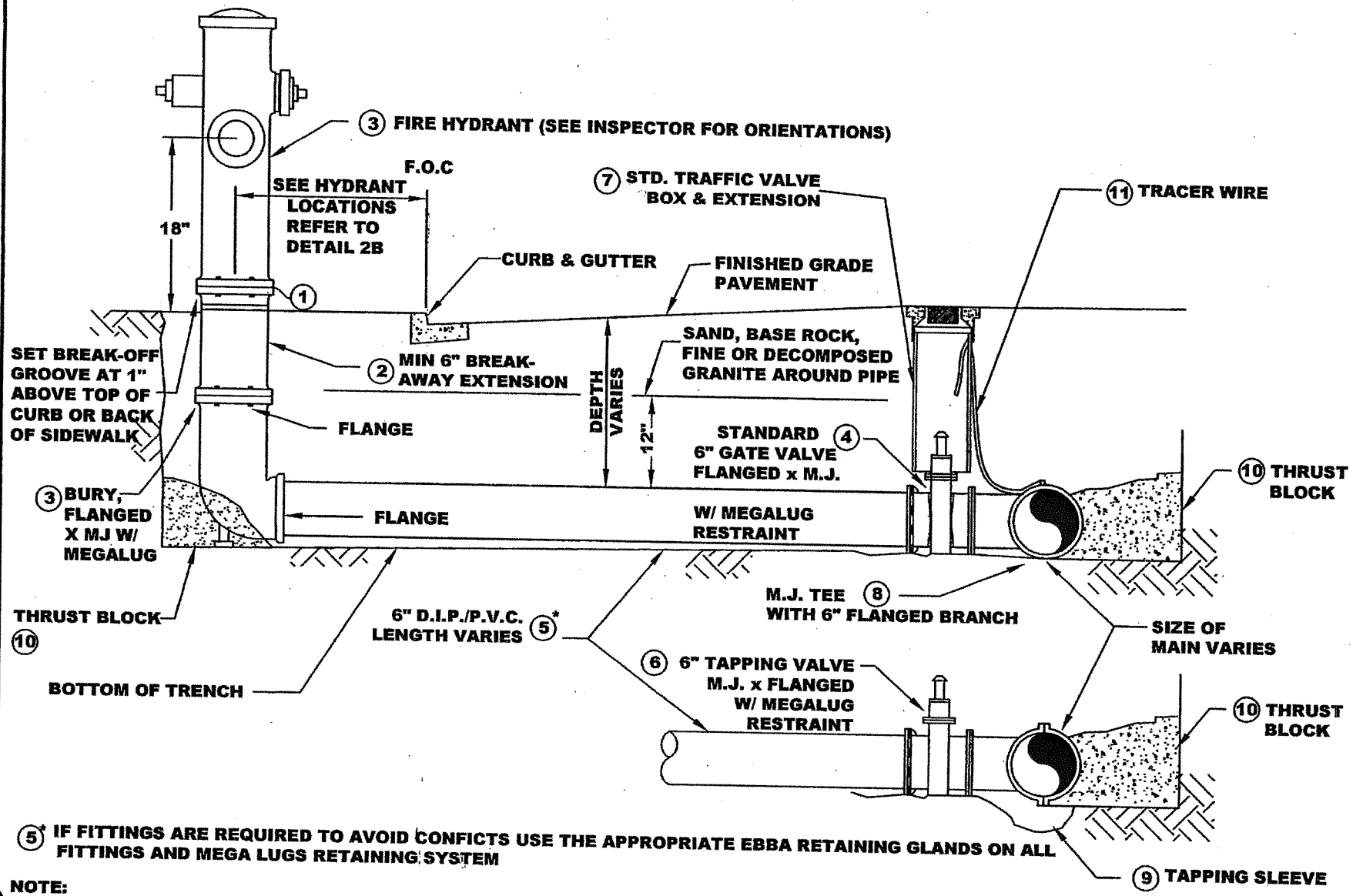

⑤* IF FITTINGS ARE REQUIRED TO AVOID CONFICTS USE THE APPROPRIATE EBBA RETAINING GLANDS ON ALL FITTINGS AND MEGA LUGS RETAINING SYSTEM

NOTE:

1. USE BREAK-OFF BOLTS FOR STANDARD F.H. INSTALLATION AT F.H. FLANGE TO EXTENSION CONNECTION ONLY.
2. IF BREAK-OFF VALVE REQUIRED PER PLANS DO NOT USE BREAK-OFF BOLTS.
3. INSTALL BOLTS UP; NUTS DOWN
4. FOR HYDRANT MARKER LOCATION, SEE DETAIL 2E-1

HYDRANT LOCATION INFORMATION

DATE : JUNE 30, 2006
REVISED : JUNE, 2007

DWG. 2B-2

APPROVED BY:

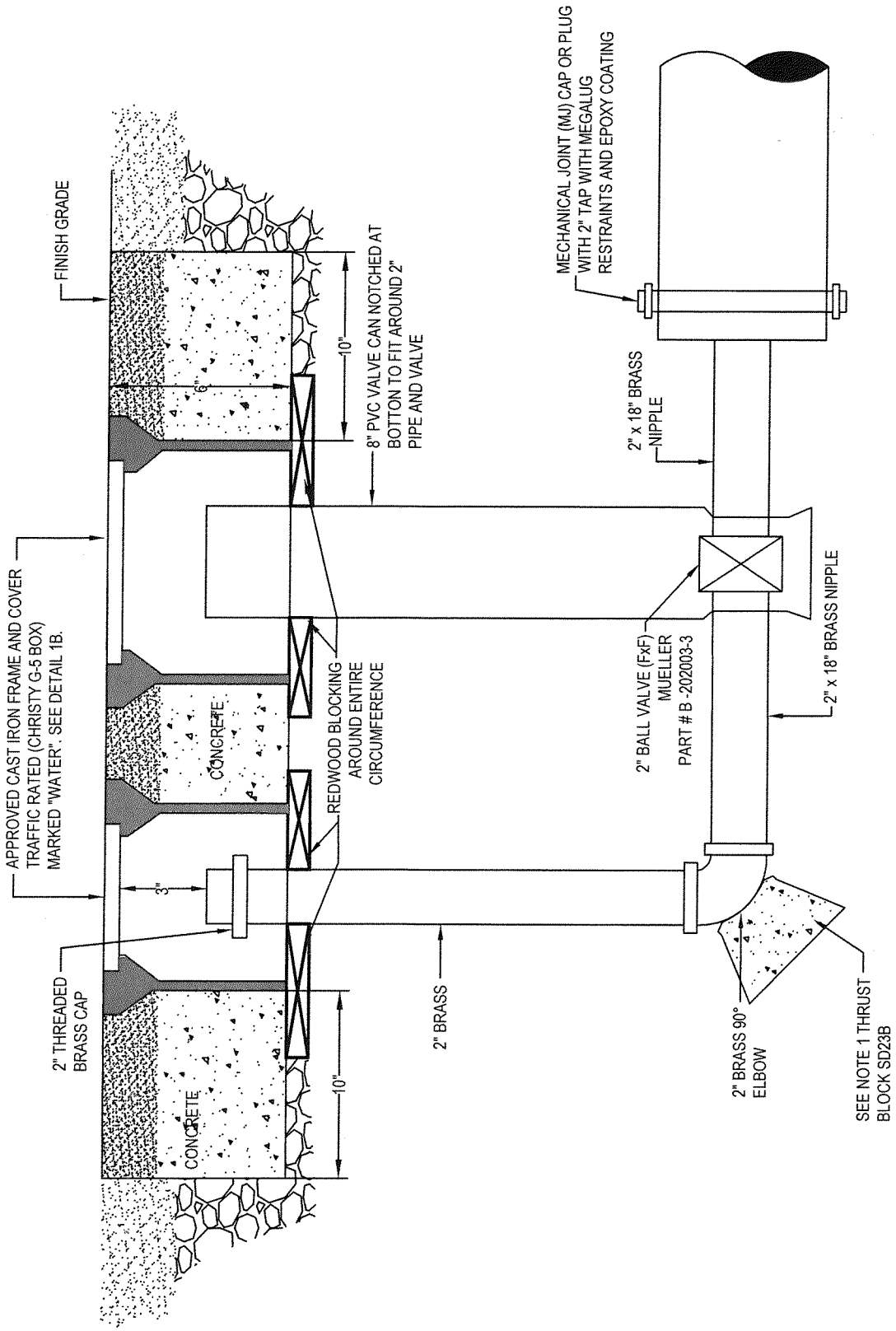

NOTES:

1. BLOW-OFF ASSEMBLY AND END OF WATER MAIN MUST HAVE A KICKER / THRUST BLOCK INSTALLED NOT TO COVER PIPE THREADS NUTS OR BOLTS.

STANDARD BLOW OFF

APPROVED BY:

DATE : JUNE 30, 2006

REVISED: MAY 2015

DWG. **3B**

STANDARD AIR-RELIEF VALVES 1" & 2"

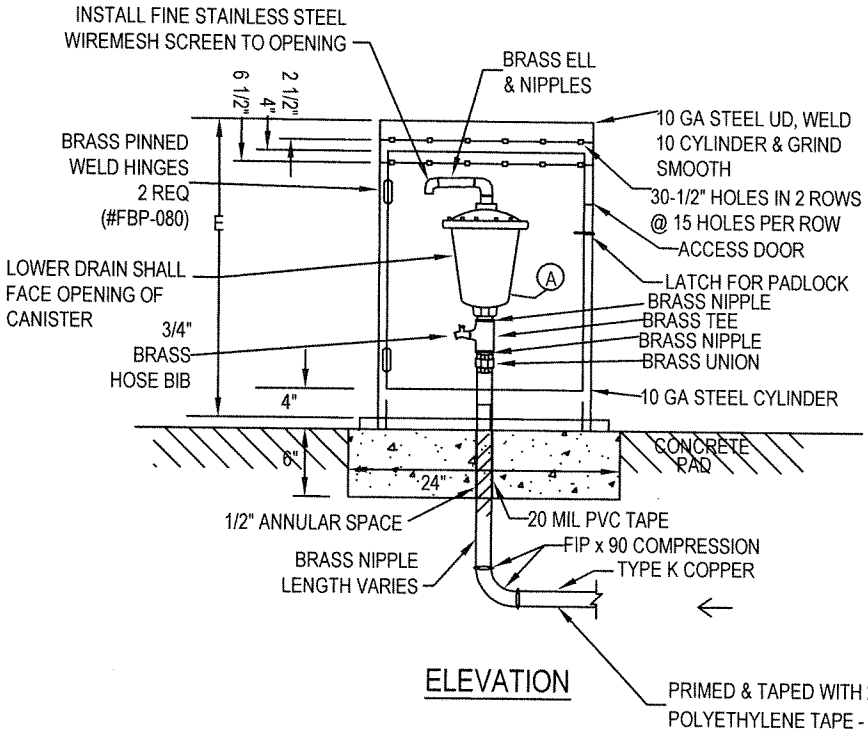

ELEVATION

MATERIAL

THE TYPE "K" COPPER TUBING SHALL AT ALL POINTS BE RISING FROM THE CORPORATION STOP TO THE AIR & VACUUM RELIEF VALVE.

Ⓐ CRISPIN UNIVERSAL AIR & VACUUM RELIEF VALVE

Ⓑ MUELLER BALL VALVE / B202000 OR FORD EQUIV.

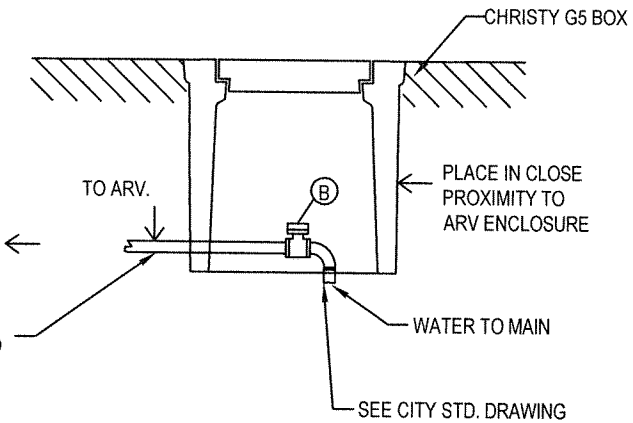

SIZING FOR AIR VALVE COVER			
VALVE SIZE	PART #	A(DIAMETER)	B (HEIGHT)
1" & 2"	VC-316	18"	30"

NOTES:

1. PIPELINE PRODUCTS PART #VC316D
2. POWDER COATED DARK GREEN
3. ANY DEVIATION FROM STANDARD DETAILS MUST BE APPROVED BY PUBLIC WORKS / FIELD SERVICES / SENIOR LEADER

NOTES:

1. CONNECTION TO WATER MAIN SHALL CONFORM TO STANDARD DETAILS AND SPECIFICATIONS.
2. USE SAME DIAMETER SEAMLESS COPPER TUBING AS REQUIRED SIZE OF AIR & VACUUM RELIEF VALVE.
3. AIR RELIEF VALVE AND CURB STOP SHALL BE PLACED IN BOX SUCH THAT THE WALL OF THE BOX WILL NOT INTERFERE WITH THE INSTALLATION AND REMOVAL OF THE VALVES.

AUTOMATIC AIR & VACUUM VALVE

DATE : JUNE 30, 2006
REVISED: MAY 2015

APPROVED BY:

DWG. 3B-1

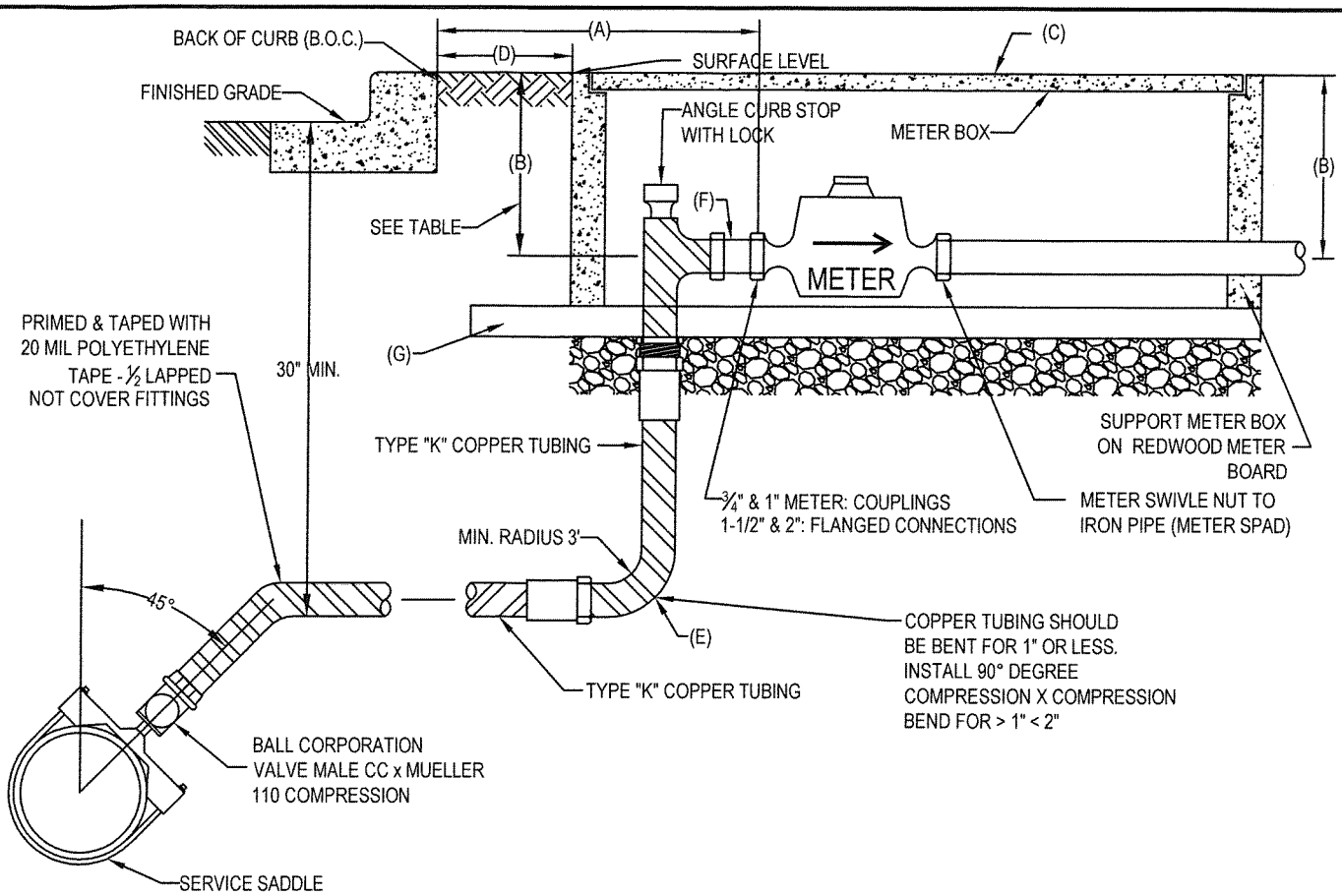

	POINT A	POINT B	POINT C	POINT D	POINT E	POINT F	POINT G
SIZE	B.O.C. TO FACE OF METER (INCHES)	CENTERLINE OF FLOW GRADE (INCHES)	ROTOCAST METER BOX W/HINGED READING LID W " x L " x D " (INCHES)	B.O.C. TO FACE OF METER BOX (INCHES)	90 DEGREE COMPRESSION x COMPRESSION	1 INCH M x ¾ INCH F METER BUSHING	METER BOARDS MUST COVER ENTIRE BOX BASE NOT TO EXCEED 6" HIGH
⅝"	8"	11"	10 x 15 x 12	3"		YES	YES
¾"	8"	11"	10 x 15 x 12	3"		YES	YES
1"	8"	10"	10 x 26.6 x 12	3"			YES
1½"	9"	11"	13 x 24 x 12	3"	YES		YES
2"	12"	12"	17 x 30 x 12	3"	YES		YES

NOTES:

1. ANGLED METER BALL, LOCKING TYPE VALVE COMPRESSION x METER THREAD SHALL BE USED. IF REPLACING AN EXISTING PIPE AND A STRAIGHT METER VALVE IS USED RATHER THAN AN ANGLED METER VALVE, A 90 DEGREE COMPRESSION FITTING MUST BE USED AND ACCOUNTED FOR TO MAKE THE NECESSARY BEND AT THE METER BOX.
2. SERVICE SADDLE SHALL BE BRASS, EPOXY OR NYLON COATED WITH BRASS OR STAINLESS STEEL STRAPS AND BOLTS TAPERED THREAD OUTLET AND SPECIFIED FOR THE TYPE OF MAIN BEING TAPPED.
3. CORPORATION VALVE AND METER VALVE SHALL BE ¼ INCH TURN BALL TYPE. METER VALVE SHALL BE LOCKING TYPE. CORPORATION VALVE SHALL BE TAPERED THREAD x COMPRESSION. MALE CC x MUELLER 110.
4. 1 INCH COPPER PIPE SHALL REMAIN AS ONE PIECE WITHOUT BREAKS SPLICING IS NOT PERMITTED. 1 ½ AND 2 INCH PIPE SHALL HAVE A 90 DEGREE COMPRESSION BY COMPRESSION TO BRING THE PIPE VERTICAL.
5. ALL COPPER PIPES SHALL ONLY BE BENT WITH A PIPE BENDER.
6. NO COPPER OR BRASS, PIPE OR FITTING SHALL BE PERMITTED TO CONTACT STEEL AT ANY POINT.
7. SEE ABOVE CHART FOR APPROVED BOX DIMENSIONS AND OTHER DRAWING MEASUREMENTS.

METER BOX AND VAULT SPECIFICATIONS

APPROVED BY:

DATE : JUNE 30, 2006

REVISED: MAY 2015

DWG. 4B

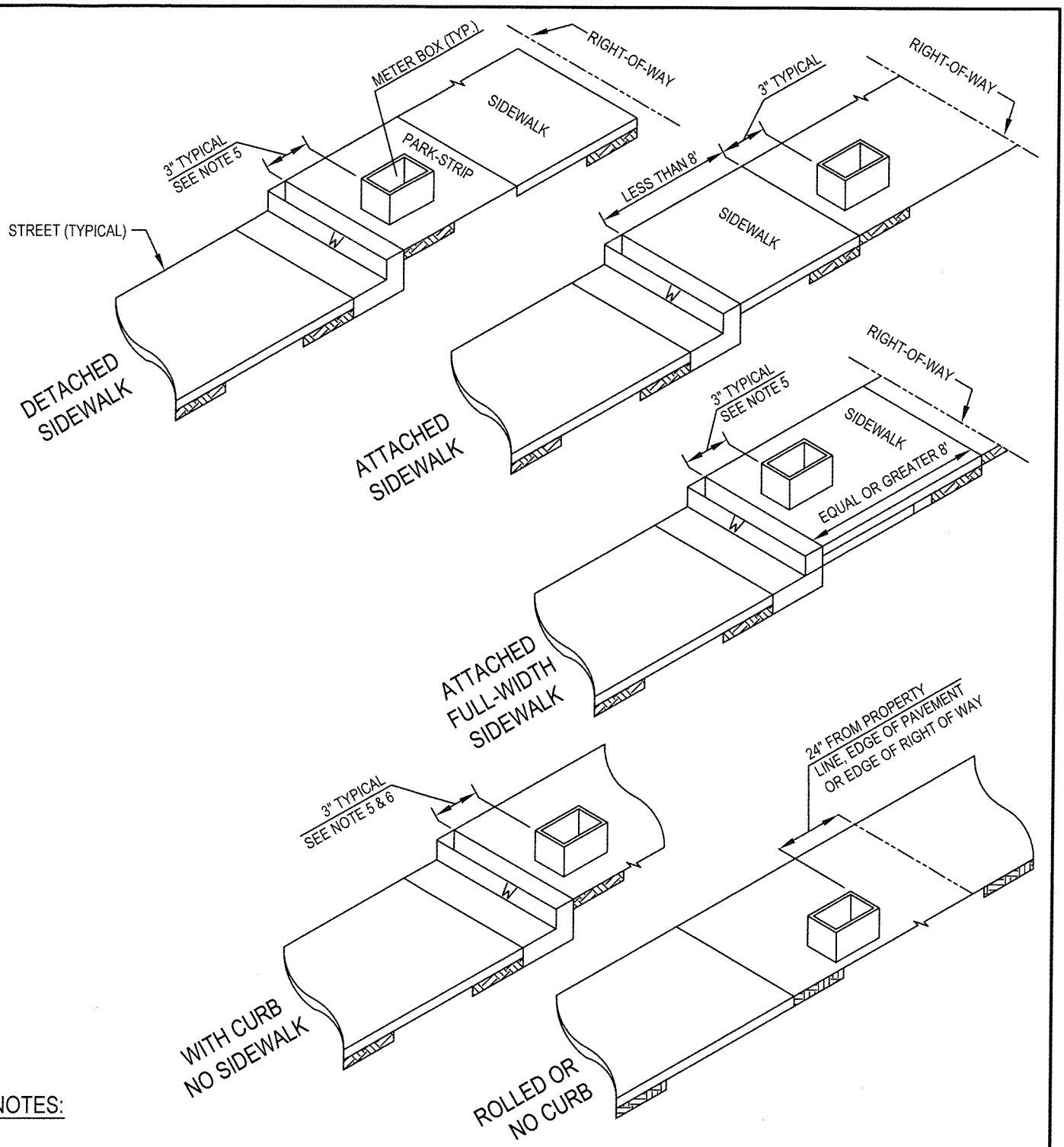

NOTES:

1. REFER TO CITY STANDARD SPECIFICATIONS WHERE APPLICABLE.
2. STAMP OR CHISEL 2" HIGH 'W' IN CURB FACE TO IDENTIFY POTABLE WATER SERVICE LOCATION.
3. STAMP OR CHISEL A 2" HIGH 'RW' IN CURB FACE TO IDENTIFY RECYCLED WATER SERVICE LOCATION.
4. ROLLED CURB METER BOX AND LID SHALL BE TRAFFIC RATED.
5. METER BOX SHALL BE INSTALLED 3" FROM THE BACK OF CURB.
6. AN EASEMENT MAY BE NEEDED DEPENDING ON LOCATION OF METER BOX.
7. METER BOXES INSTALLED FOR THE USE OF RECYCLED WATER SHALL BE IDENTIFIED AS DESCRIBED IN CITY STANDARD SPECIFICATIONS.
8. MATERIALS SHALL BE SELECTED FORM THE CITY'S APPROVED MATERIALS LIST.
9. METER BOXES INSTALLED WHERE A ROLLED CURB IS OR WITHIN 5 FEET OF DRIVEWAY SHALL BE TRAFFIC RATED BOTH BOX AND LID.

METER BOX AND VAULT SPECIFICATIONS	APPROVED BY:	
	DATE : JUNE 30, 2006 **REVISED: MAY 2015**	DWG. **4B-1**

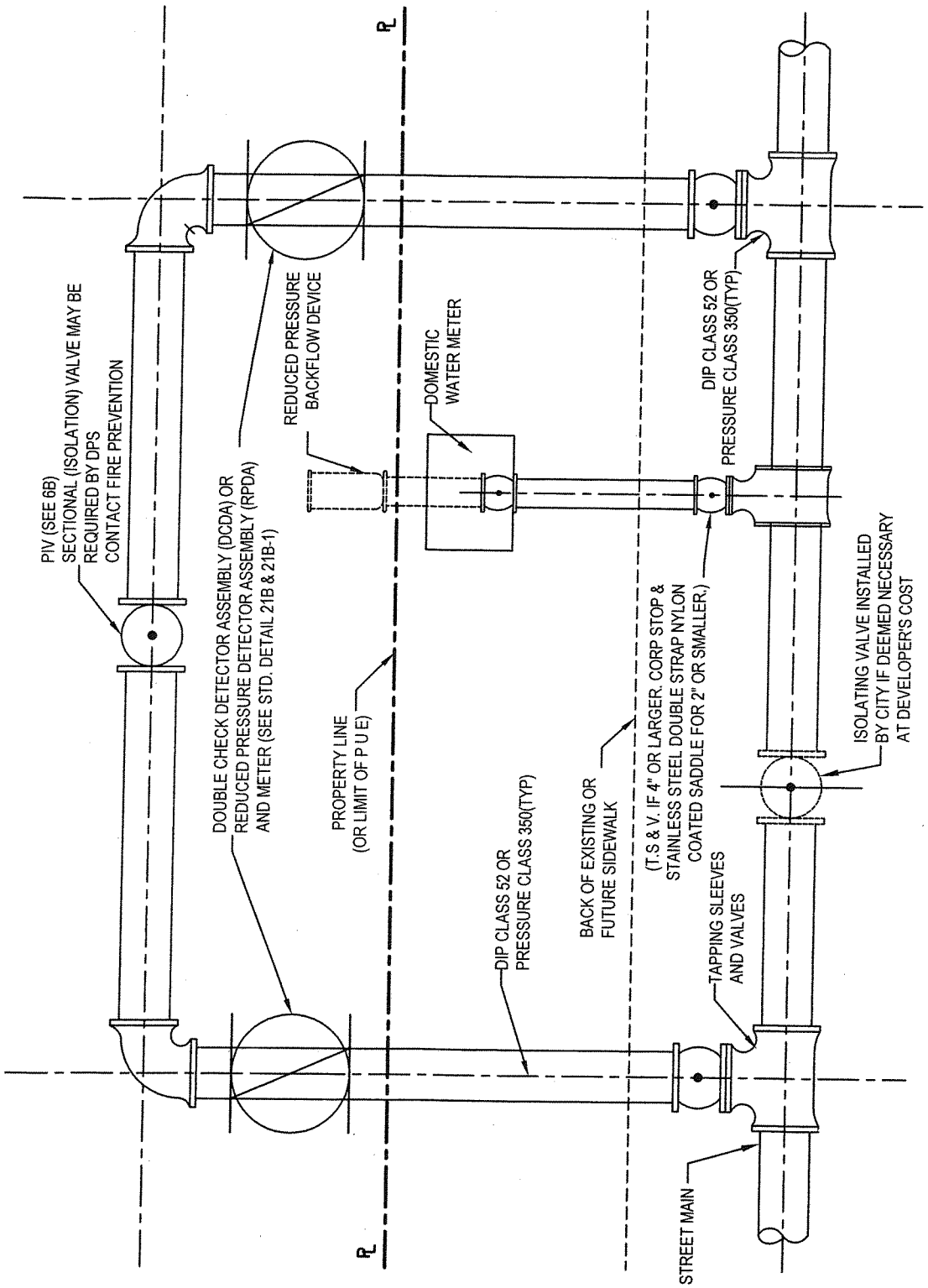

NOTE:

AN APPROVED BACKFLOW DEVICE REQUIRED ON THE FIRE LOOP AND ON THE DOMESTIC WATER SYSTEM

FIRE SERVICE LOOP WITH SEPERATE DOMESTIC WATER SERVICE

APPROVED BY:

DATE : JUNE 30, 2006

REVISED: SEPTEMBER 2014

5B

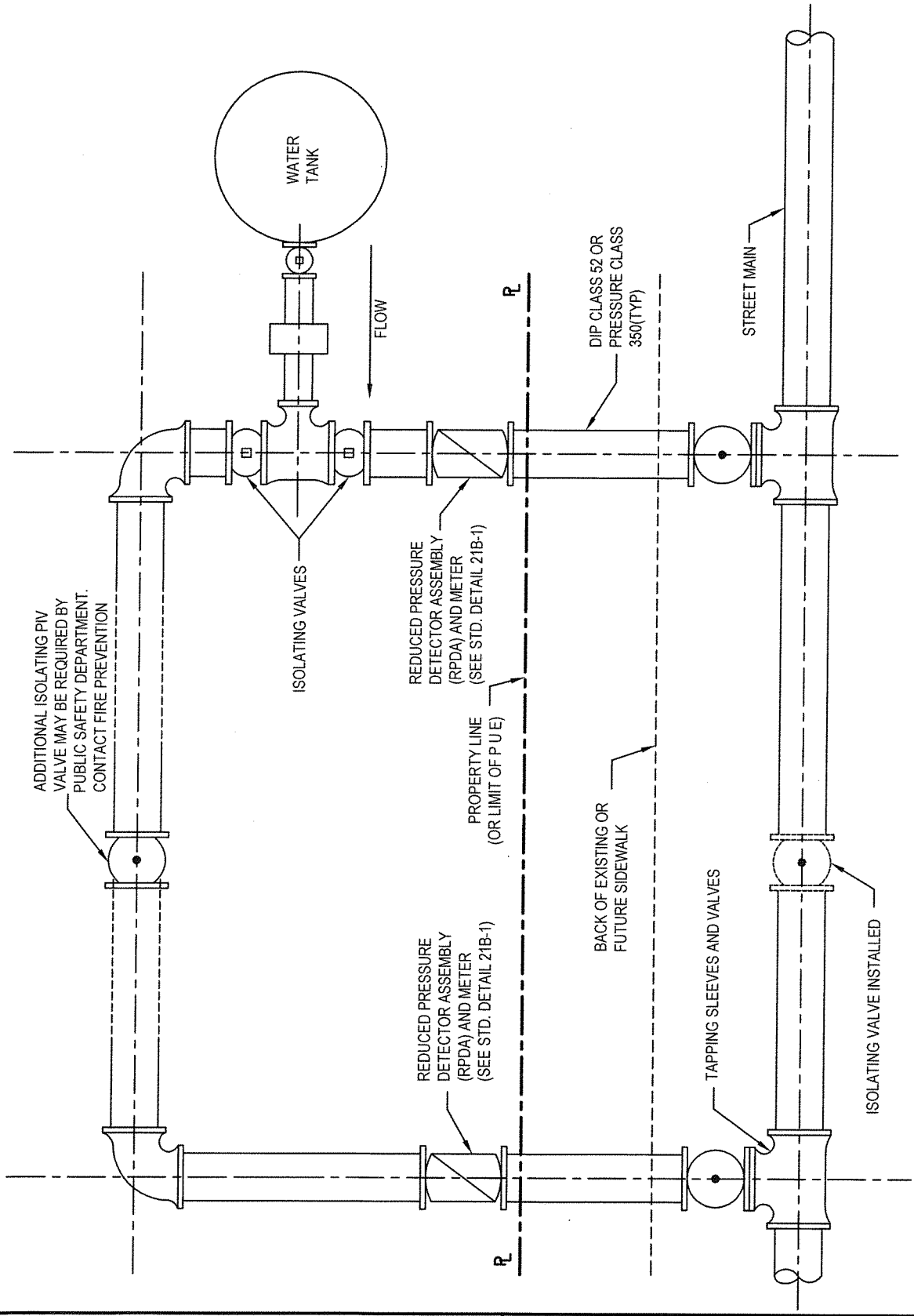

FIRE SERVICE LOOP WITH FIRE PUMP AND TANK

APPROVED BY:

DATE : JUNE 30, 2006
REVISED: SEPTEMBER 2014

6B

FIRE AND DOMESTIC SERVICE FROM A SINGLE CONNECTION

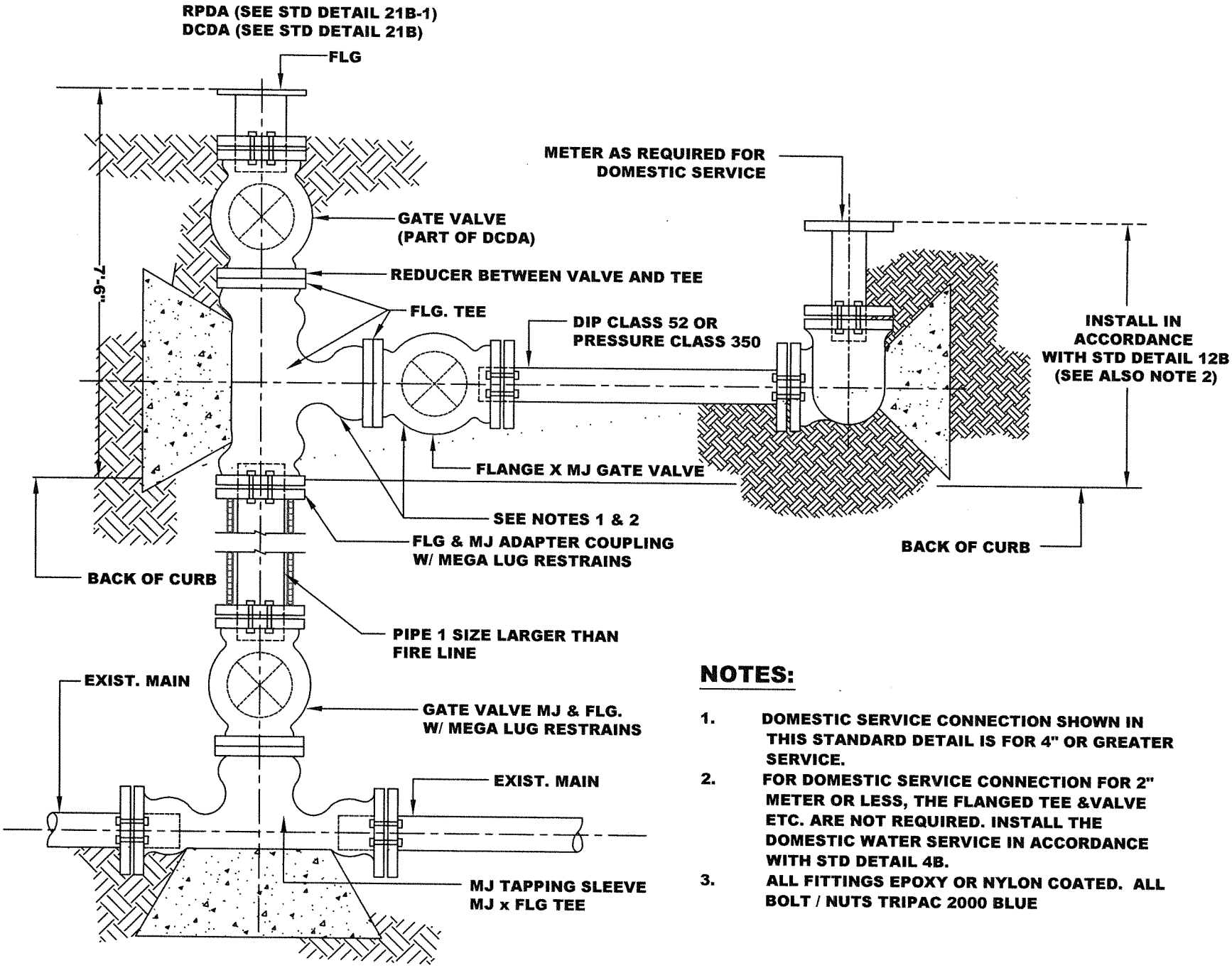

NOTES:

1. DOMESTIC SERVICE CONNECTION SHOWN IN THIS STANDARD DETAIL IS FOR 4" OR GREATER SERVICE.
2. FOR DOMESTIC SERVICE CONNECTION FOR 2" METER OR LESS, THE FLANGED TEE &VALVE ETC. ARE NOT REQUIRED. INSTALL THE DOMESTIC WATER SERVICE IN ACCORDANCE WITH STD DETAIL 4B.
3. ALL FITTINGS EPOXY OR NYLON COATED. ALL BOLT / NUTS TRIPAC 2000 BLUE

(APPROVAL OF CITY ENGINEER REQUIRED)

DATE: JUNE 30, 2006
REVISED: MAY 2015

APPROVED BY:

8B

FIRE AND DOMESTIC COMBINED SERVICE LOOP SYSTEM

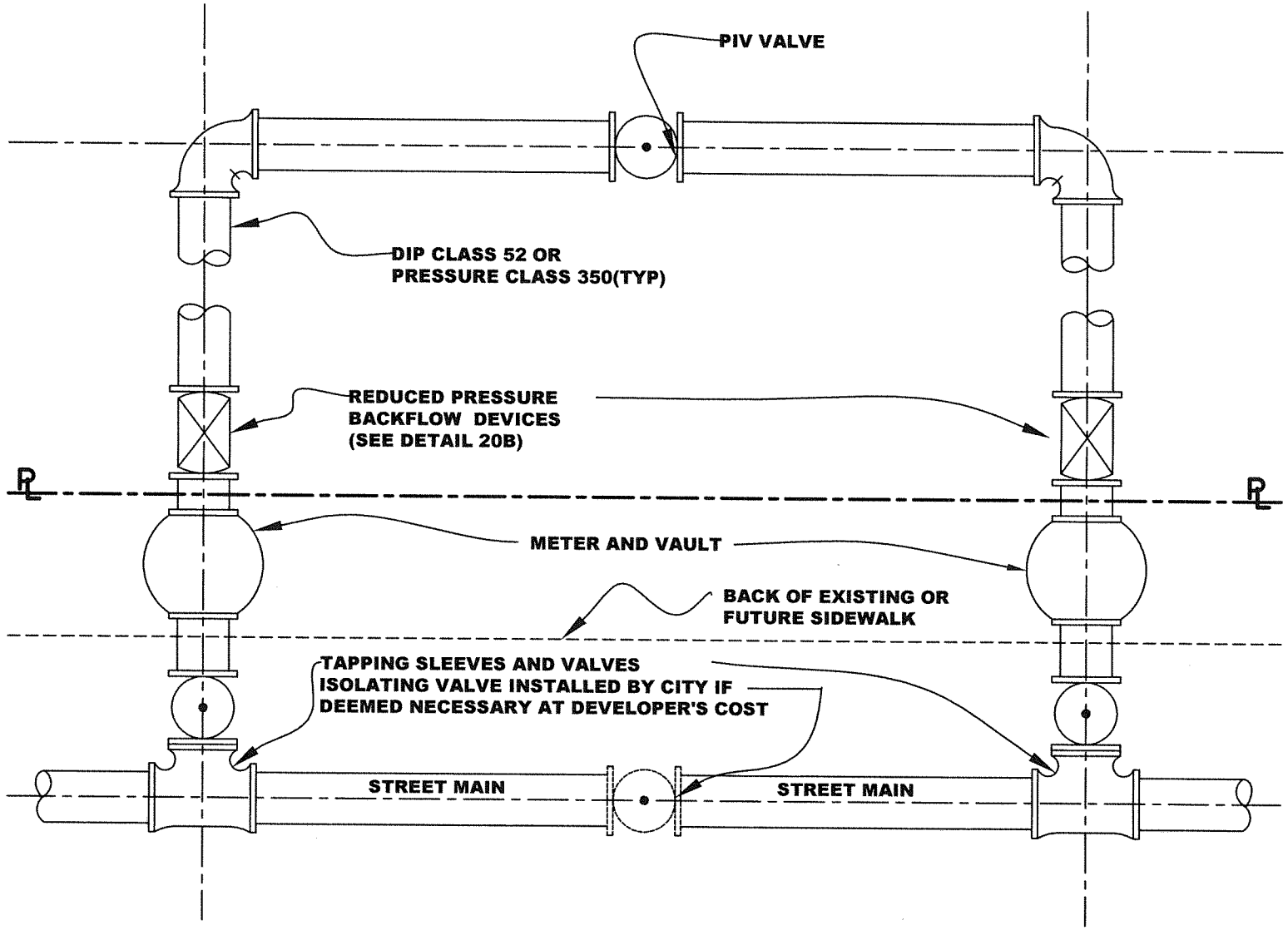

NOTES:

1. BACKFLOW DEVICE MUST BE SAME SIZE AS PIPE IN LOOPED SYSTEM.
2. MFM/MVR METER SHALL BE SAME SIZE AS LOOPED SYSTEM OR AS OTHERWISE APPROVED BY CITY ENGINEER.

DATE: JUNE 2006
REVISED: JUNE 2016

APPROVED BY:

10B

WATER SERVICE INSTALLATION
3" THROUGH 10" METERS

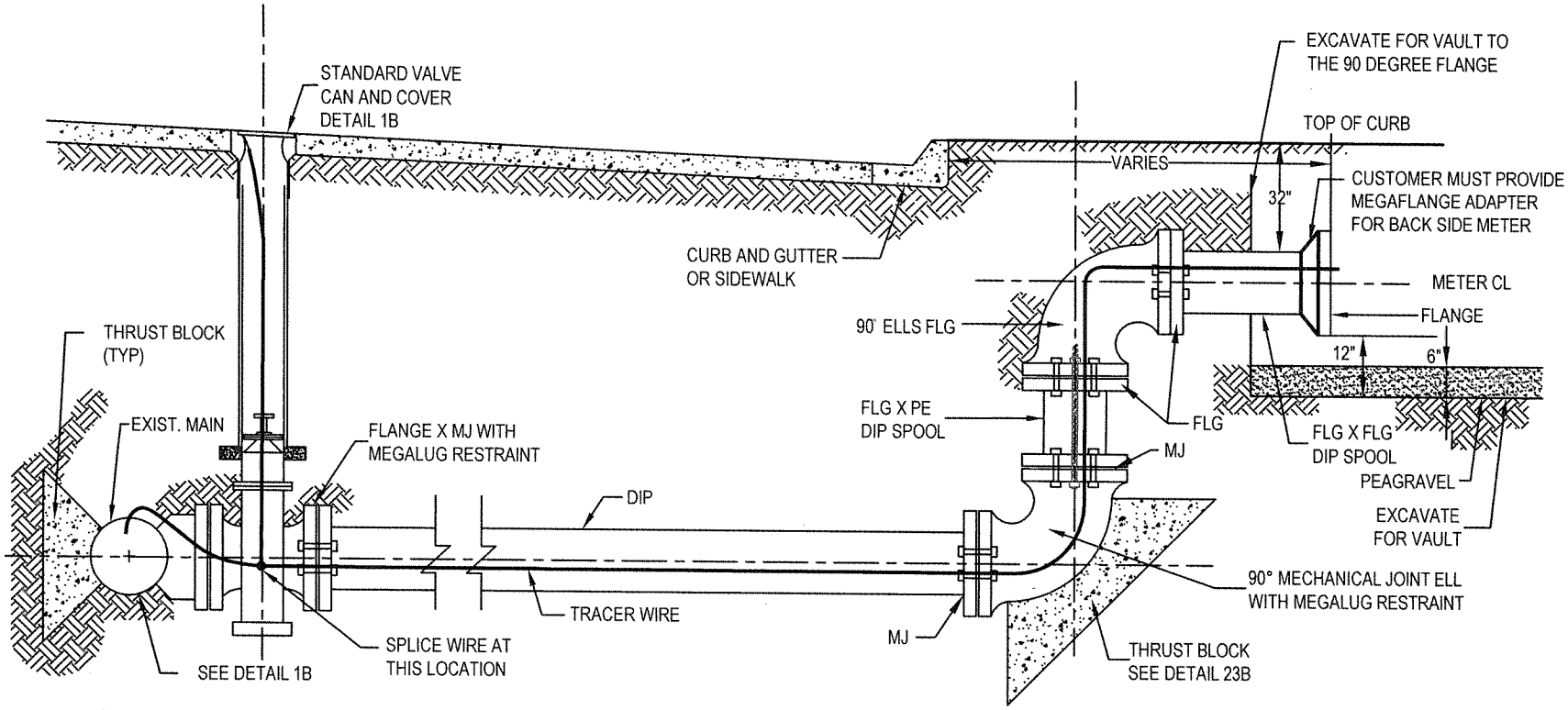

NOTES:

1. VAULTS WILL BE SET IN PUBLIC RIGHT - OF - WAY.
2. WHERE MOUND LANDSCAPING IS USED, A RETAINING WALL SHALL BE CONSTRUCTED IN ORDER TO KEEP VAULT LEVEL WITH TOP OF CURB.

3.A AN EXCAVATED HOLE, COMPLETE WITH PEAGRAVEL BASE AND IN ACCORDANCE WITH THESE DETAILS, SHALL BE PROVIDED PRIOR TO CITY INSTALLATION OF VAULT, METER AND APPURTENANCES.

3.B AN EXCAVATED HOLE COMPLETE WITH 4" CONCRETE SLAB AND 4" OF ABOVE PEAGRAVEL BASE TO BE USED IN ALL SIDEWALK INSTALLATIONS SHALL BE PROVIDED PRIOR TO CITY INSTALLATION.

4. TRACER WIRE SHALL BE INSTALLED FROM MAIN AND EXTEND INTO VALVE BOX AND METER BOX PER CITY STD. DETAILS.
5. NON METALLIC WARNING TAPE BLUE COLOR LETTERS WATER MAIN BURIED BELOW.
6. FINISHED GRADE TO TOP OF PIPE BEHIND CURB IS 32".
7. ALL MJ FITTINGS SHALL HAVE MEGA LUG RESTRAINT. ALL FITTINGS MUST BE EPOXY COATED.

ABBREVIATIONS:

FLG	FLANGE
MJ	MECHANICAL JOINT
PE	PLAIN END

APPROVED BY:

DATE : JUNE 30, 2006
REVISED: MAY 2015

12B

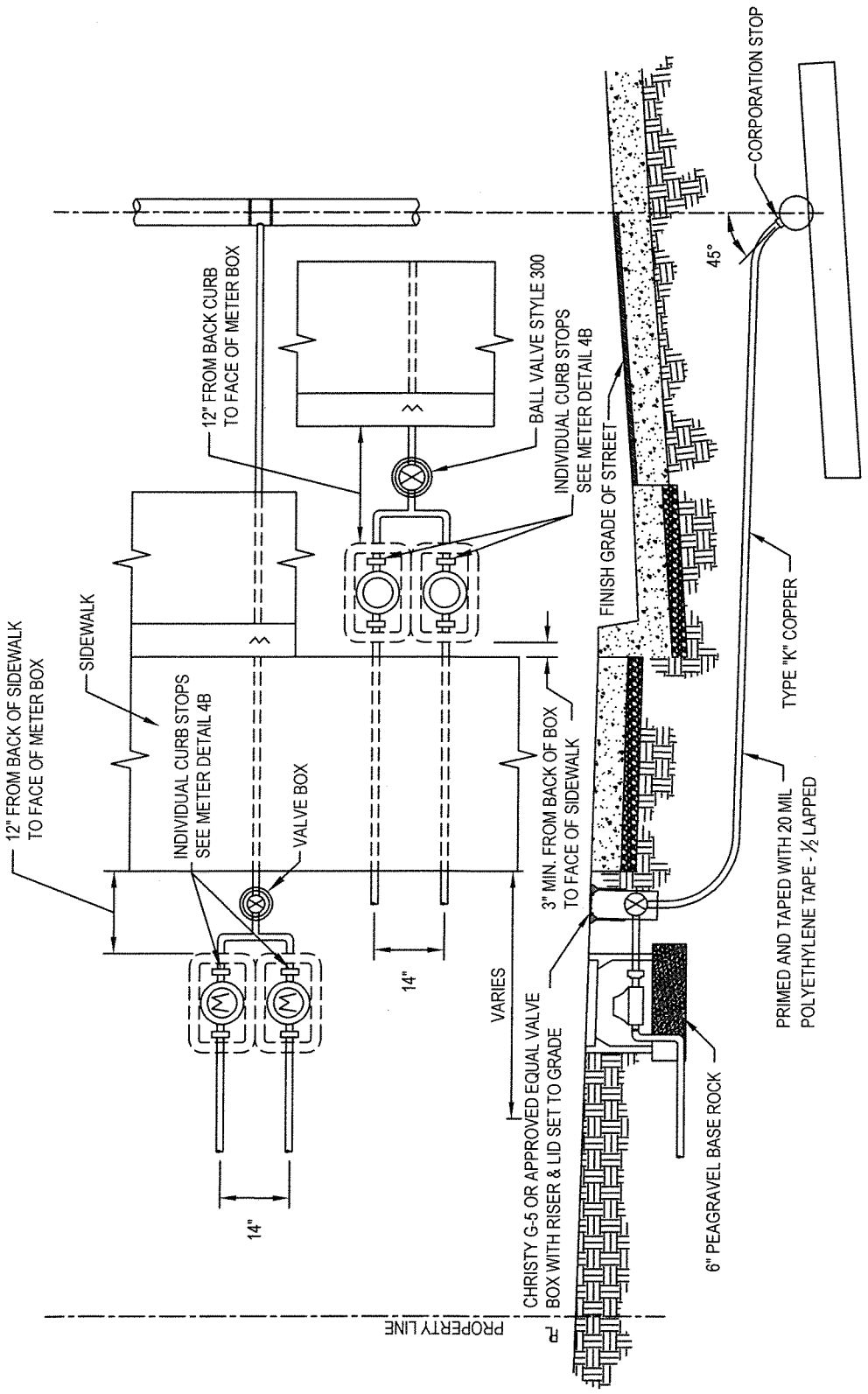

NOTES:

1. MANIFOLD SERVICE CAN BE USED IN LIEU OF INDIVIDUAL SERVICE LATERALS FROM THE STREET MAIN.
2. MATERIAL - MANIFOLD, NIPPLES, AND FITTINGS SHALL BE COPPER OR BRASS. COPPER PIPE CONNECTION TO BE COMPRESSION TYPE.
3. FOR FURTHER DETAILS, SEE STANDARD DETAIL 4B.
4. WHEN THE CURB IS A ROLLED CURB, INSTALL TRAFFIC RATED METER BOX AND LID.

TWO METER MANIFOLD SERVICE
(1" SERVICE LINE FOR TWO 5/8" METERS)

APPROVED BY:

DATE : JUNE 30, 2006
REVISED: SEPTEMBER 2014

DWG. 13B

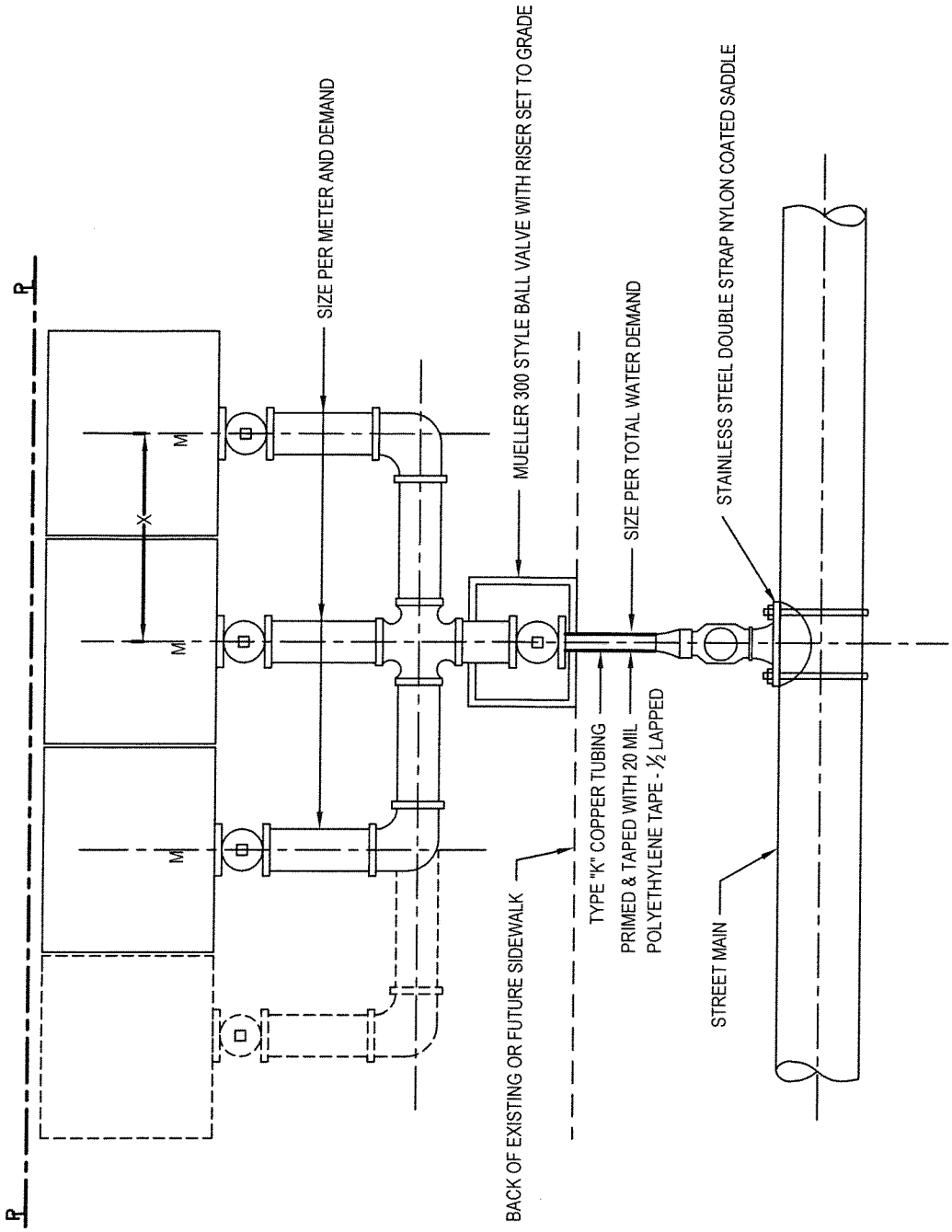

NOTES:

1. MANIFOLD SERVICE CAN BE USED IN LIEU OF A NUMBER OF INDUVIDUAL SERVICE LATERALS FROM THE STREET MAIN.
2. EACH METER CONNECTION MUST HAVE A CURB STOP BEFORE EACH METER.
3. FOR FURTHER DETAILS, SEE STANDARD DETAIL 4B.
4. A 3-INCH MINIMUM CLEARANCE BETWEEN METER BOXES IS REQUIRED, ALL BOXES ARE REQUIRED TO BE CENTERED OVER METERS.

MANIFOLD SERVICE
FOR 3 OR MORE METERS
UP TO 1" METER

APPROVED BY:

DATE : JUNE 30, 2006
REVISED: MAY 2015

14B

MANIFOLD SERVICE 3 OR MORE METERS (ALTERNATIVE PIPE ARRANGEMENT)

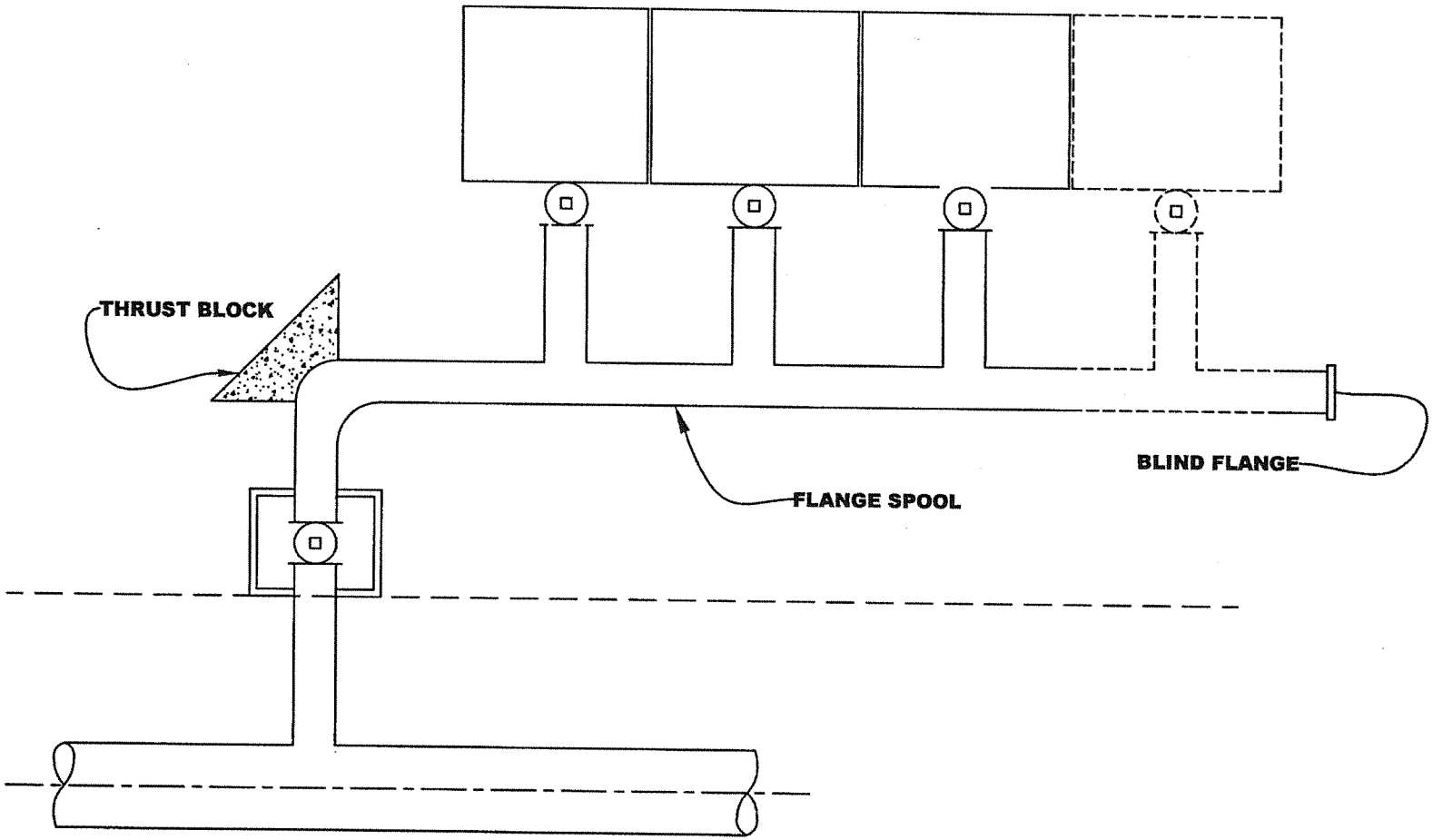

NOTES:

1. THIS IS AN ALTERNATIVE PIPE ARRANGEMENT TO THAT SHOWN ON STANDARD DETAIL 14B.
2. FOR FURTHER DETAILS, REFER TO STANDARD DETAIL 14B.

APPROVED BY:

DATE: JUNE 30, 2006

14B-1

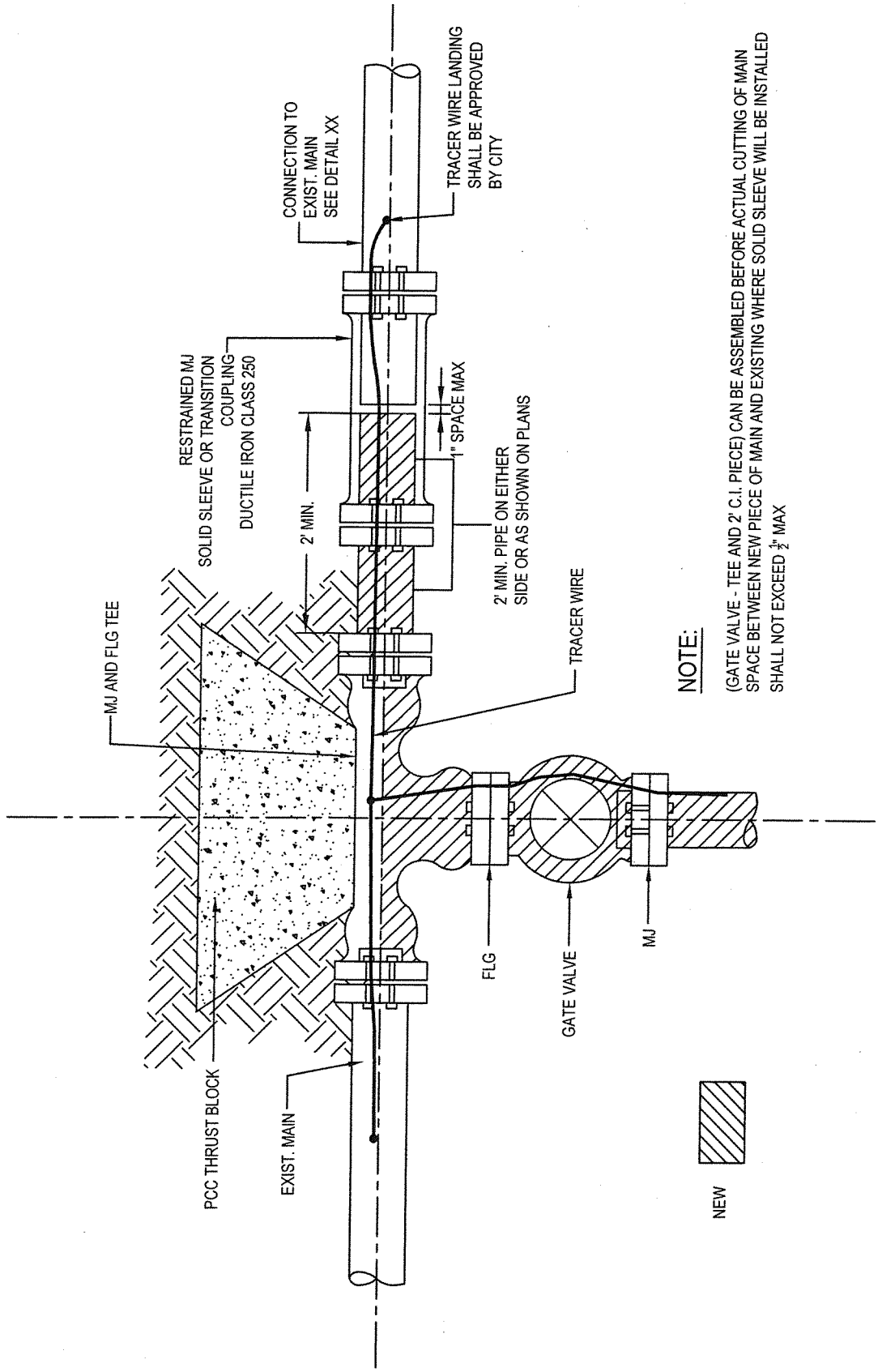

NOTE:

(GATE VALVE - TEE AND 2' C.I. PIECE) CAN BE ASSEMBLED BEFORE ACTUAL CUTTING OF MAIN SPACE BETWEEN NEW PIECE OF MAIN AND EXISTING WHERE SOLID SLEEVE WILL BE INSTALLED SHALL NOT EXCEED $\frac{1}{2}$" MAX

ABBREVIATIONS:

FLG	FLANGE
MJ	MECHANICAL JOINT
PE	PLAIN END

INSTALLATION OF CUT - IN TEE AND GATE VALVE

APPROVED BY:

DATE : JUNE 30, 2006
REVISED: SEPTEMBER 2014

15B

THRUST BLOCK FOR HORIZONTAL BENDS

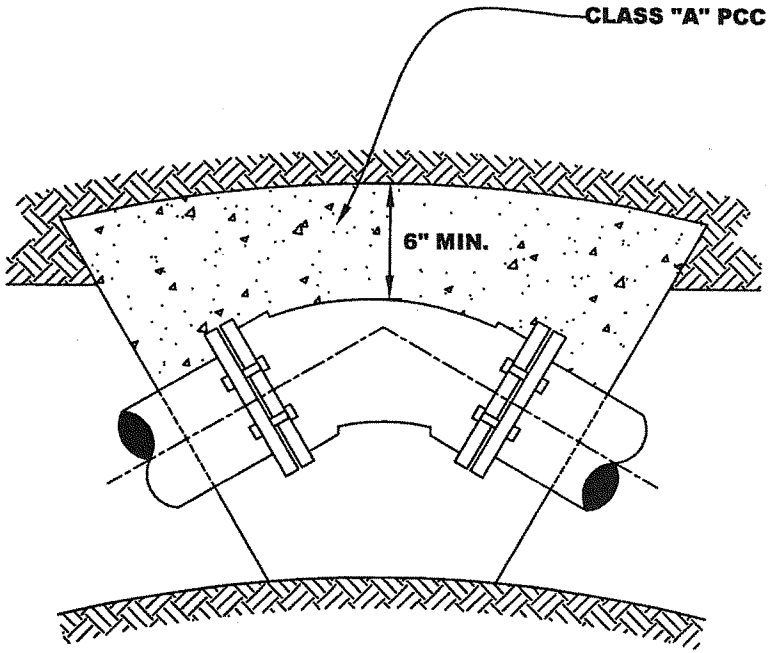

PLAN

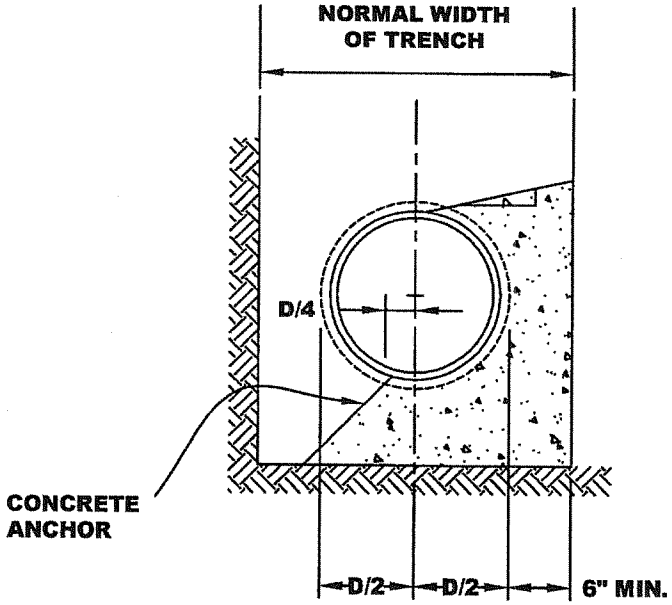

SECTION

NOTES:

1. D = PIPE DIAMETER
2. WRAP FLANGES/BOLTS IN VISQUEEN

DATE: JUNE 30, 2006

APPROVED BY:

DWG. 16B

2006 STANDARD DETAILS

WATER LINE VERTICAL OFFSET

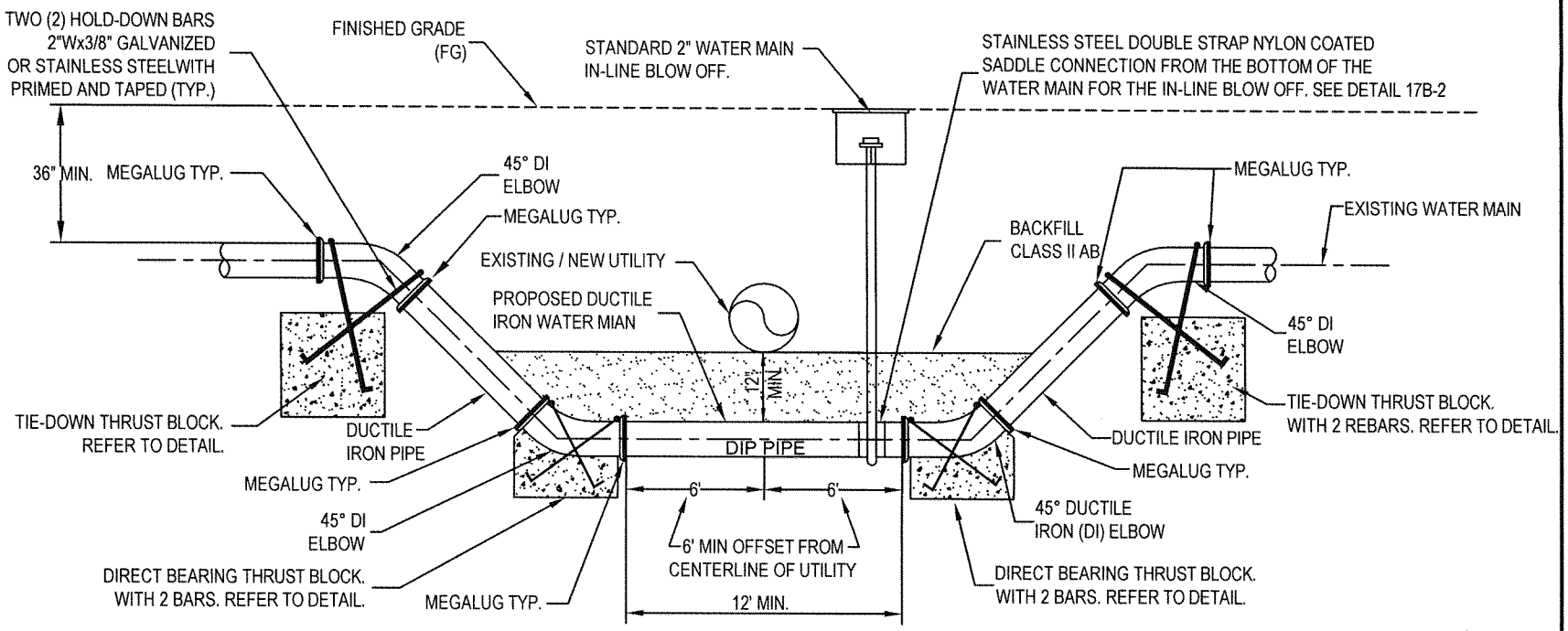

WATER LINE VERTICAL OFFSET DETAIL

NOT TO SCALE

NOTES:

1. ALL FITTINGS TO BE MJ x MJ WITH MEGALUG RESTRAINTS. THRUST BLOCK DIMENSIONS PER DETAILS BELOW & STD. DETAIL 23B.
1. CONTRACTOR TO CONFIRM SIZE, MATERIAL, LINE AND LEVEL OF WATER MAIN AND OTHER IMPACTED EXISTING UTILITIES PRIOR TO CONSTRUCTION.
2. ALL DUCTILE IRON PIPE & FITTINGS SHALL BE POLYETHYLENE WRAPPED IN TAPE PRIOR TO INSTALLATION PER AWWA C105.
3. HOLD-DOWN BARS MUST BE PRIMED AND TAPED WITH A 90 DEGREE HOOK.

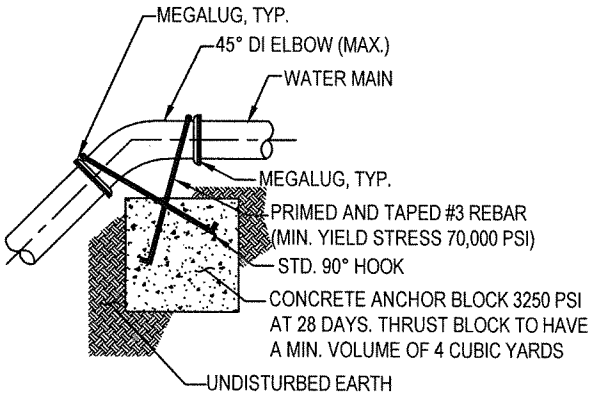

TIE-DOWN THRUST BLOCK RESTRAINT DETAIL

NOT TO SCALE

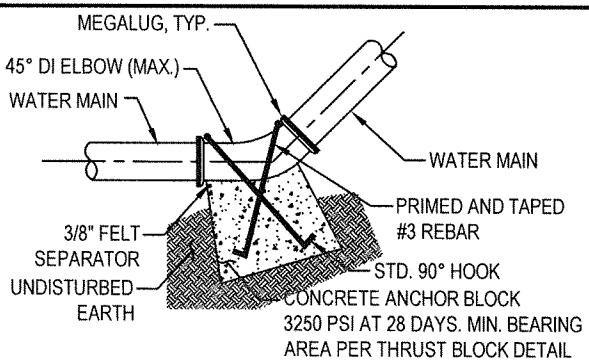

DIRECT BEARING THRUST BLOCK DETAIL

NOT TO SCALE

NOTES: (TO BE PROVIDED BY CITY)

1. PIPE LARGER THAN 12" SHALL BE DESIGNED BY ENGINEER.
2. THRUST BLOCK SHALL NOT INTERFERE WITH MEGALUGS OR OTHER FITTINGS.
3. REFER TO TABLE IN DETAIL 23B FOR THRUST BLOCK VOLUME.
4. ALL THRUST BLOCKS SHALL BE FORMED. THE MINIMUM THICKNESS SHALL BE ⅜" PLYWOOD OR APPROVED BY CITY.

DATE : JUNE 30, 2006
REVISED: MAY 2015

DWG. 17B

APPROVED BY:

WATER LINE VERTICAL OFFSET

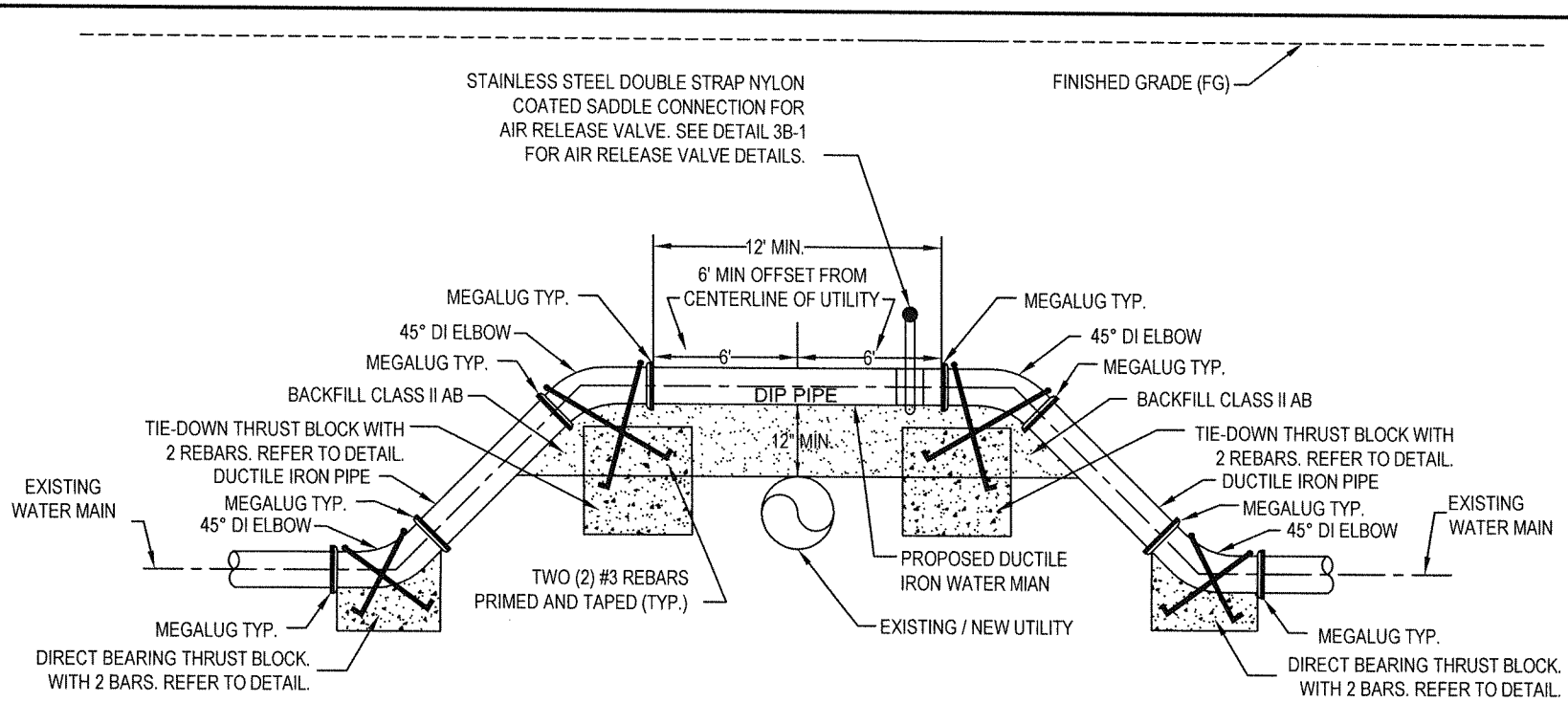

WATER LINE VERTICAL OFFSET DETAIL

NOT TO SCALE

NOTES:

1. ALL FITTINGS TO BE MJ x MJ WITH MEGALUG RESTRAINTS. THRUST BLOCK DIMENSIONS PER DETAILS BELOW & STD. DETAIL 23B.
2. CONTRACTOR TO CONFIRM SIZE, MATERIAL, LINE AND LEVEL OF WATER MAIN AND OTHER IMPACTED EXISTING UTILITIES PRIOR TO CONSTRUCTION.
3. ALL DUCTILE IRON PIPE & FITTINGS SHALL BE POLYETHYLENE WRAPPED IN TAPE PRIOR TO INSTALLATION PER AWWA C105.
4. HOLD-DOWN BARS MUST BE PRIMED AND TAPED WITH A 90 DEGREE HOOK.

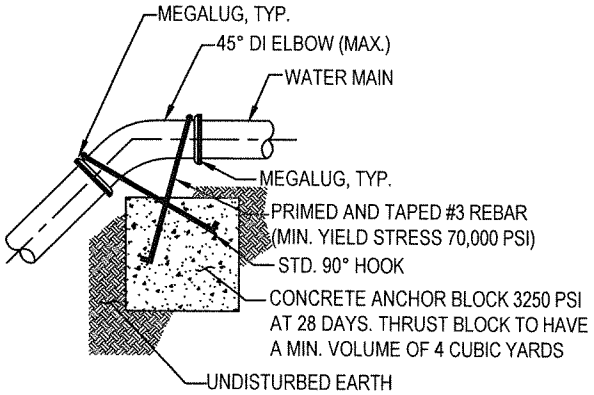

TIE-DOWN THRUST BLOCK RESTRAINT DETAIL

NOT TO SCALE

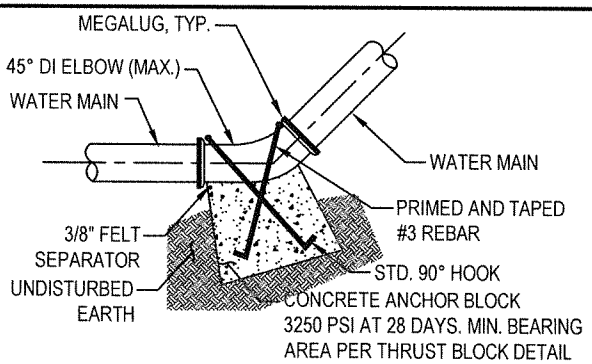

DIRECT BEARING THRUST BLOCK DETAIL

NOT TO SCALE

NOTES: (TO BE PROVIDED BY CITY)

1. PIPE LARGER THAN 12" SHALL BE DESIGNED BY ENGINEER.
2. THRUST BLOCK SHALL NOT INTERFERE WITH MEGALUGS OR OTHER FITTINGS.
3. REFER TO TABLE IN DETAIL 23B FOR THRUST BLOCK VOLUME.
4. ALL THRUST BLOCKS SHALL BE FORMED. THE MINIMUM THICKNESS SHALL BE ⅜" PLYWOOD OR APPROVED BY CITY.

DATE : JUNE 30, 2006
REVISED: MAY 2015

DWG. 17B-1

APPROVED BY:

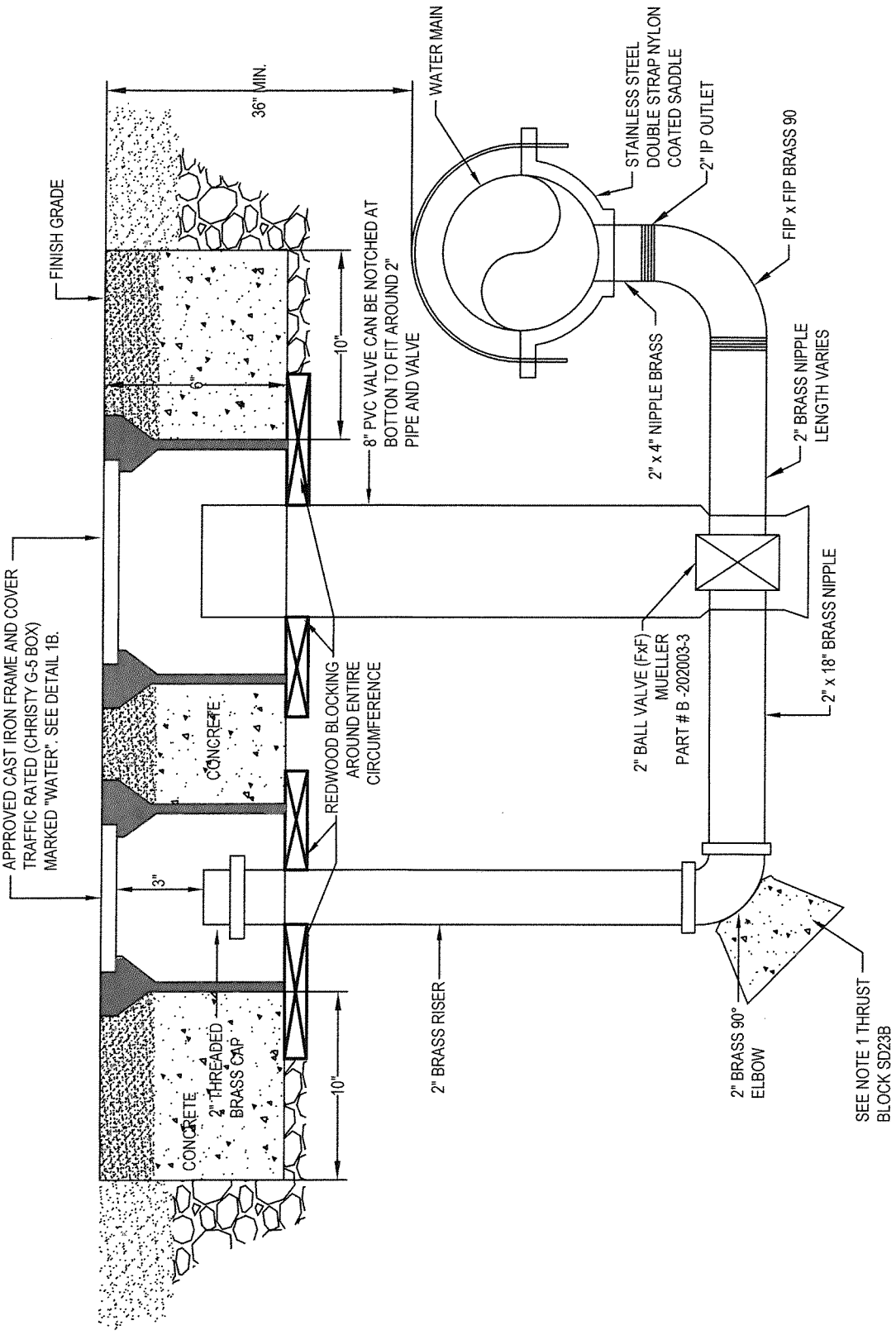

STANDARD BLOW OFF

APPROVED BY:

DATE : JUNE 30, 2006

REVISED: MAY 2015

DWG. 17B-2

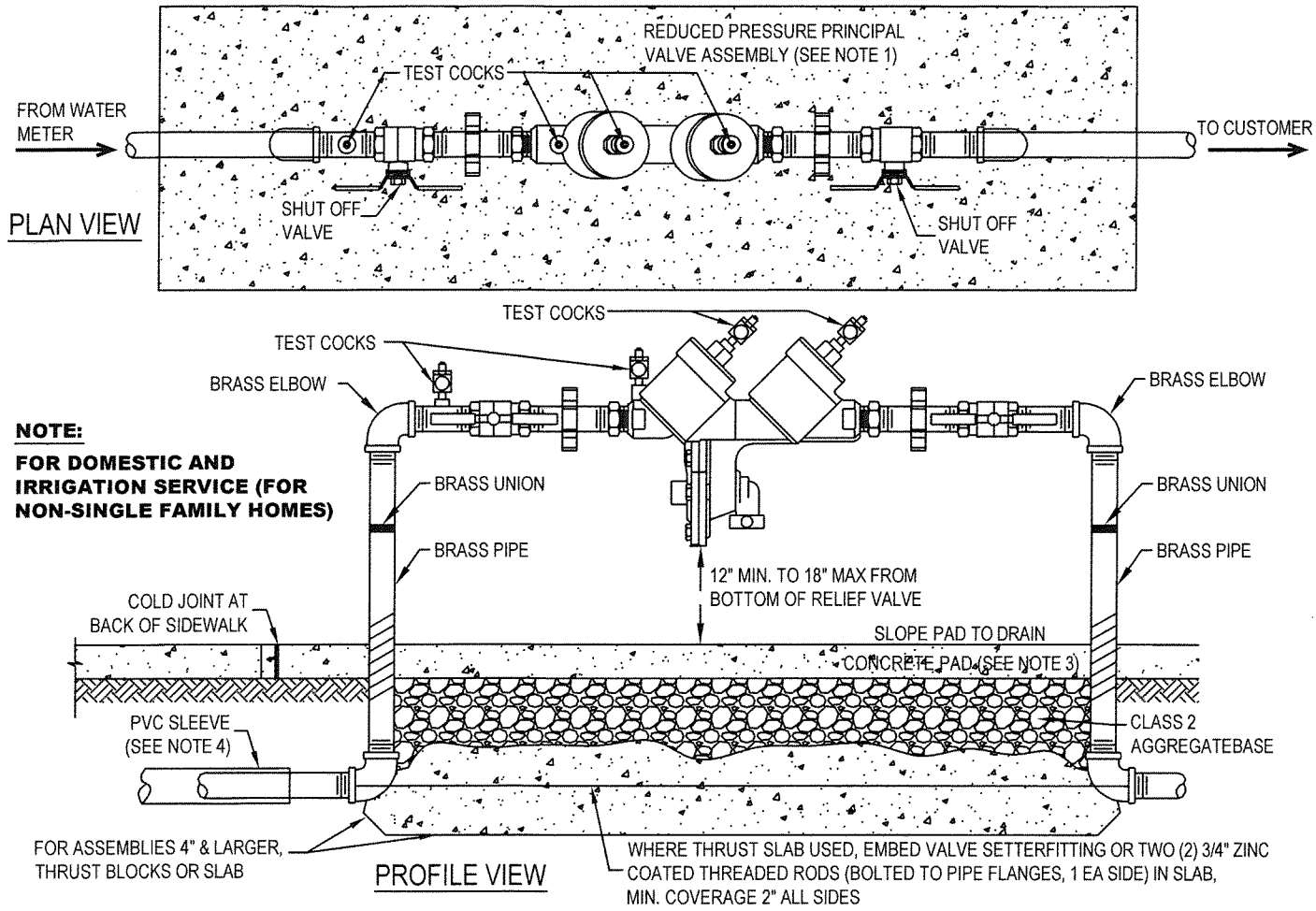

NOTES:

1. ALLOWED BACKFLOW ASSEMBLIES AND THEIR ORIENTATIONS SHALL BE LIMITED TO THOSE SPECIFIED ON THE "LIST OF APPROVED BACKFLOW PREVENTION ASSEMBLIES" BY THE UNIVERSITY OF SOUTHERN CALIFORNIA'S FOUNDATION FOR CROSS-CONNECTION CONTROL AND HYDRAULIC RESEARCH, 2010 OR LATEST REVISION.
2. THE BACKFLOW DEVICE SHALL BE LOCATED: A MAXIMUM OF 5' FROM BACK OF SIDEWALK(TYP) OR AT A LOCATION DETERMINED BY THE WATER DISTRIBUTION CROSS CONNECTION PERSONNEL IN THE FIELD.
3. CONCRETE PAD SHALL BE CLASS B CONCRETE, 4" MINIMUM THICKNESS, REINFORCED WITH WELDED WIRE MESH.
4. WHERE SERVICE LINES SMALLER THAN 4" PASS UNDER A SIDEWALK, THEY SHALL BE INSTALLED IN A PVC CASING/SLEEVE AT LEAST 1" LARGER THAN THE SERVICE LINE AND EXTENDS AT LEAST 6" BEYOND THE EDGES OF THE SIDEWALK.
5. METAL PIPES EXPOSED TO SOIL OR CONCRETE SHALL BE COATED WITH 3M SCOTCHWRAP PIPE PRIMER AND WRAPPED WITH 3M SCOTCHWRAP 20ML NO.51 BLACK PVC TAPE(1/2"OVERLAP).
6. THE PORTION OF THE TRENCH FROM BACK OF METER TO THE DEVICE SHALL REMAIN OPEN UNTIL WATER DISTRIBUTION CROSS CONNECTION PERSONNEL HAVE INSPECTED AND APPROVED THE INSTALLATION. CALL 669-600-7322.
7. THE TESTING SIDE OF THE DEVICE SHALL HAVE A MINIMUM 24" OF CLEARANCE FROM OBSTRUCTIONS(NON-TRIMBLE LANDSCAPING, BUILDINGS, UTILITIES, ETC). MULTIPLE BACKFLOW DEVICES SHALL BE SEPARATED BY A MINIMUM OF 18" AND BE OF EQUAL HEIGHT.
8. BOLLARDS MAY BE REQUIRED BY CITY TO PROVIDE ADDITIONAL PROTECTION.
9. BACKFLOW ASSEMBLIES INSTALLED ON POTABLE WATER SERVICES SHALL BE LEAD FREE.
10. BACKFLOW ASSEMBLIES SHALL BE THE SAME SIZE OF THE WATER METER.
11. NO GALVINIZED PIPE OR DISIMILAR METAL PIPE MAY BE USED.
12. A BACKFLOW PREVENTER ENCLOSURE IS REQUIRED. SEE DETAIL 19B.
13. BACKFLOW PREVENTER IS TO BE PAINTED WITH GLOSS BLACK PAINT. NO BRASS IS TO BE PAINTED.

BACKFLOW PREVENTION DEVICE SIZE UP TO 2"	APPROVED BY:	
	DATE: JUNE 30, 2006 **REVISED: MAY 2015**	DWG. **18B**

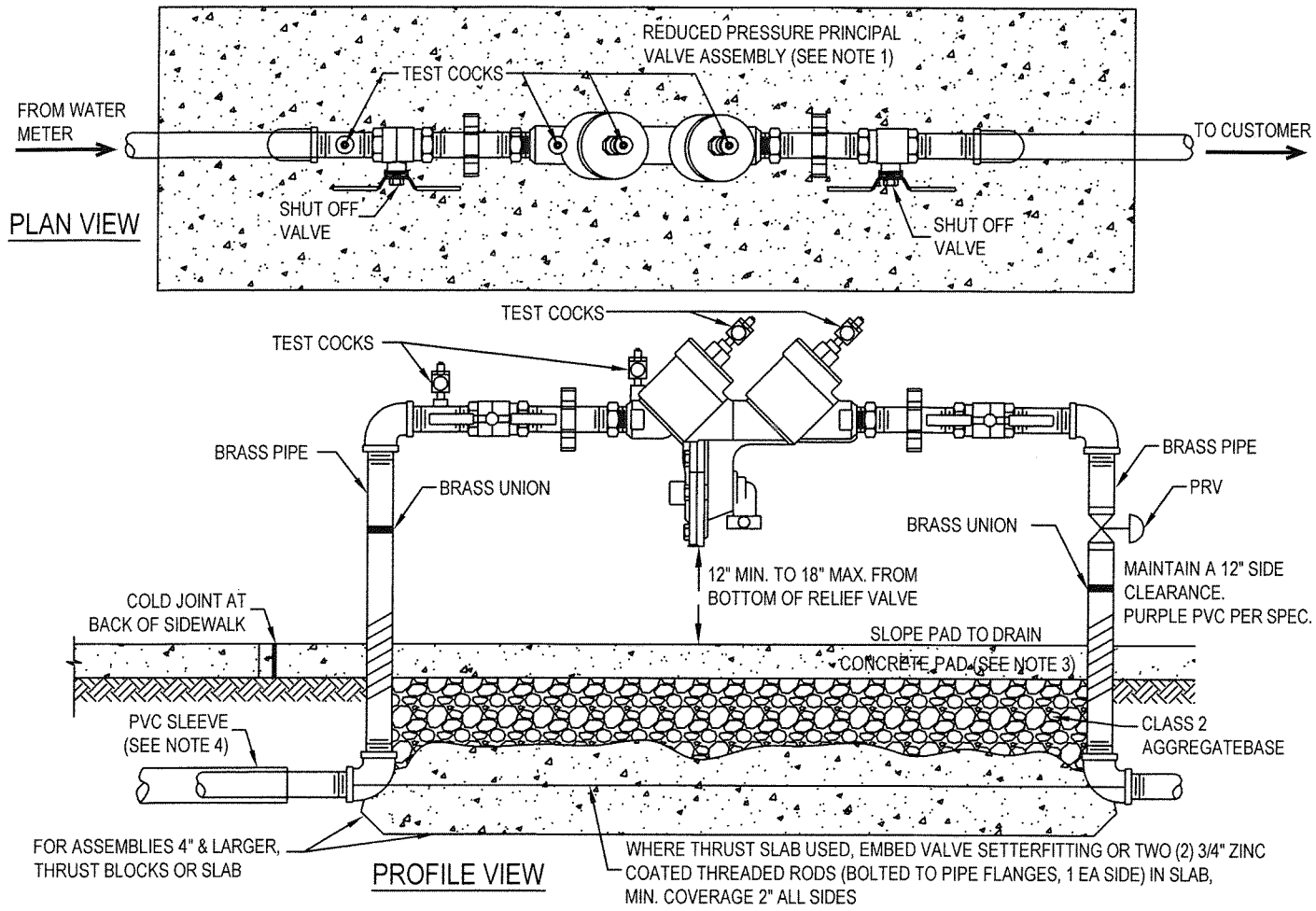

NOTES:

1. ALLOWED REDUCED PRESSURE PRINCIPLE BACKFLOW ASSEMBLIES AND THEIR ORIENTATIONS SHALL BE LIMITED TO THOSE SPECIFIED ON THE "LIST OF APPROVED BACKFLOW PREVENTION ASSEMBLIES" BY THE UNIVERSITY OF SOUTHERN CALIFORNIA'S FOUNDATION FOR CROSS-CONNECTION CONTROL AND HYDRAULIC RESEARCH, 2010 OR LATEST REVISION.
2. THE BACKFLOW DEVICE SHALL BE LOCATED:(A) A MAXIMUM OF 5' FROM BACK OF SIDEWALK(TYP); OR AT A LOCATION DETERMINED BY THE WATER DISTRIBUTION CROSS CONNECTION PERSONNEL IN THE FIELD.
3. CONCRETE PAD SHALL BE CLASS B CONCRETE, 4" MINIMUM THICKNESS, REINFORCED WITH WELDED WIRE MESH.
4. WHERE SERVICE LINES SMALLER THAN 4" PASS UNDER A SIDEWALK, THEY SHALL BE INSTALLED IN A PVC CASING/SLEEVE AT LEAST 1" LARGER THAN THE SERVICE LINE AND EXTENDS AT LEAST 6" BEYOND THE EDGES OF THE SIDEWALK.
5. METAL PIPES EXPOSED TO SOIL OR CONCRETE SHALL BE COATED WITH 3M SCOTCHWRAP PIPE PRIMER AND WRAPPED WITH 3M SCOTCHWRAP 20 MIL NO.51 BLACK PVC TAPE(1/2"OVERLAP).
6. THE PORTION OF THE TRENCH FROM BACK OF METER TO THE DEVICE SHALL REMAIN OPEN UNTIL WATER DISTRIBUTION CROSS CONNECTION PERSONNEL HAVE INSPECTED AND APPROVED THE INSTALLATION. CALL 669-600-7322.
7. THE TESTING SIDE OF THE DEVICE SHALL HAVE A MINIMUM 24" OF CLEARANCE FROM OBSTRUCTIONS(NON-TRIMBLE LANDSCAPING, BUILDINGS, UTILITIES, ETC). MULTIPLE BACKFLOW DEVICES SHALL BE SEPARATED BY A MINIMUM OF 18" AND BE OF EQUAL HEIGHT.
8. BOLLARDS MAY BE REQUIRED BY CITY TO PROVIDE ADDITIONAL PROTECTION.
9. PRV TO BE MAINTAINED BY PROPERTY OWNER.
10. NO GALVANIZED PIPE OR DISIMILAR METAL PIPE MAY BE USED.
11. A BACKFLOW PREVENTER ENCLOUSRE IS REQUIRED, SEE DETAIL 19B.
12. BACKFLOW PREVENTER TO BE PAINTED WITH PURPLE COLOR, NO BRASS TO BE PAINTED.

RECYCLED WATER BACKFLOW PREVENTION DEVICE SIZE UP TO 2 INCHES	APPROVED BY:	
	DATE : JUNE 30, 2006 **REVISED: MAY 2015**	DWG. **18B-1**

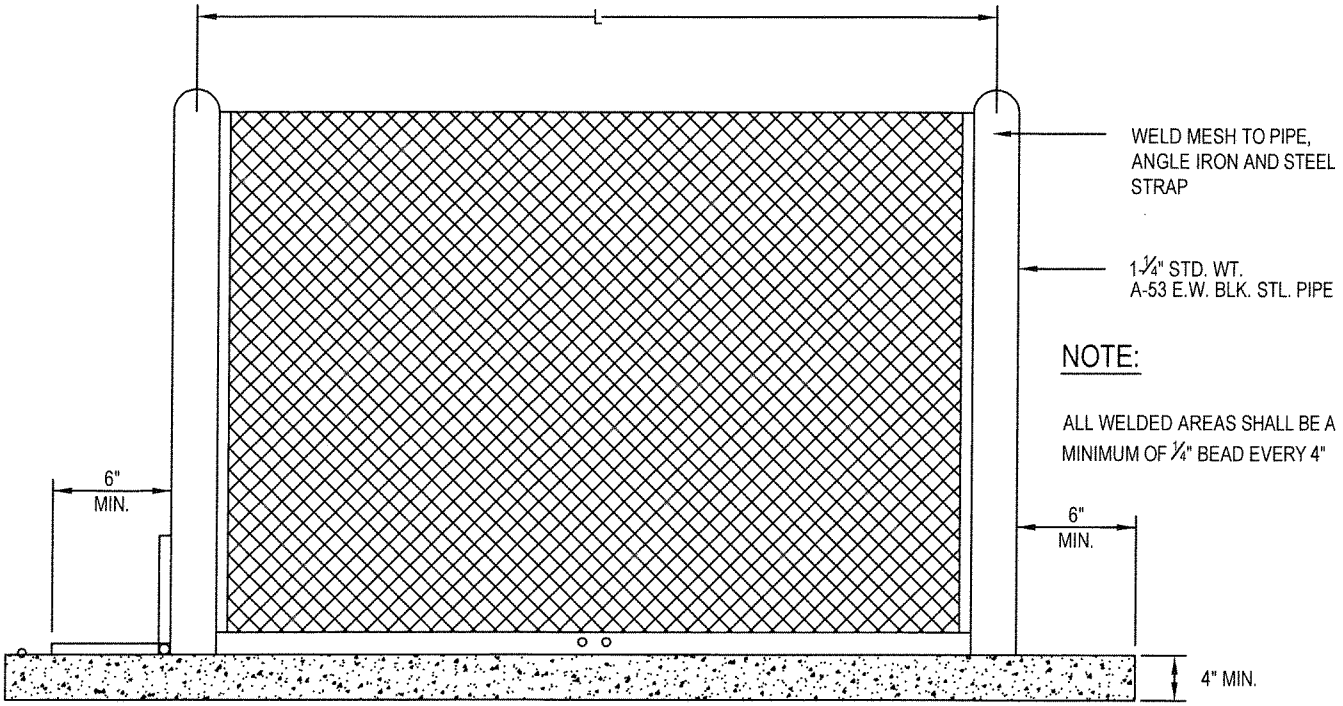

NOTE:

ALL WELDED AREAS SHALL BE A MINIMUM OF ¼" BEAD EVERY 4"

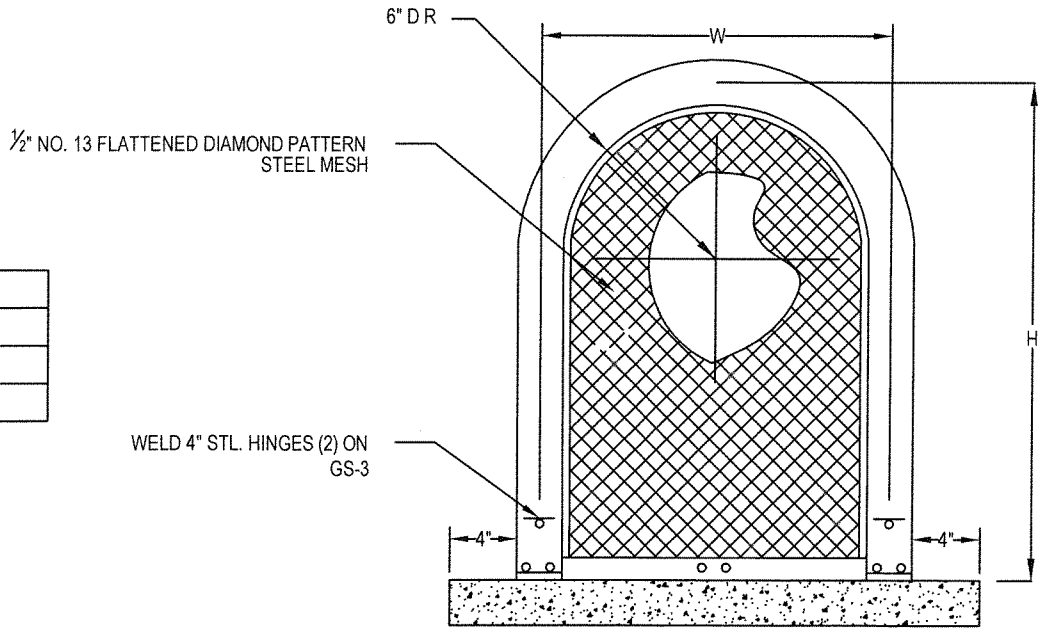

MODEL	CENTERLINE DIM.
GS - 1	12"W x 24"H x 24"L
GS - 2	12"W x 24"H x 32"L
GS - 3	12"W x 18"H x 42"L

NOTES:

1. ENCLOSURE REQUIRED ON ALL NEW CONSTRUCTION BACKFLOW DEVICES FOR SIZES ¾" TO 2".
2. "GUARDSHACK TMENCLOSURE" MODEL GS OR APPROVED EQUAL, PHOENIX, ARIZONA 85032 (602-788-5411)
3. AFTER ALL WELDING, ELECTROSTATIC APPLICATION OF POWDER SHALL BE FUSION BONDED TO ENTIRE ENCLOSURE. (HUNTER GREEN)
4. ALL BOLTS SHALL BE ZINC PLATED.

BACKFLOW PREVENTION DEVICE ENCLOSURE

APPROVED BY:

DATE: JUNE 30, 2006
REVISED: MAY 2015

19B

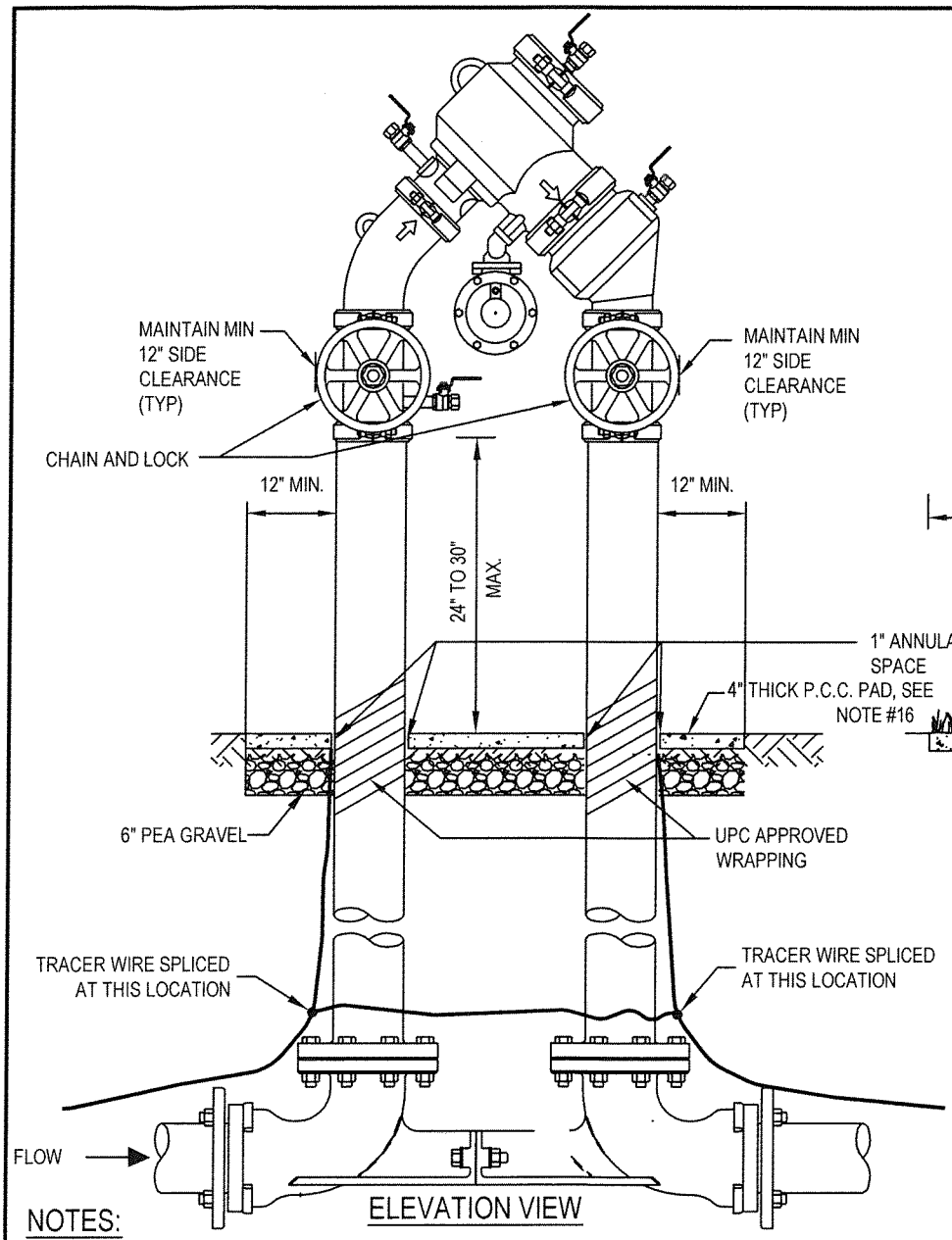

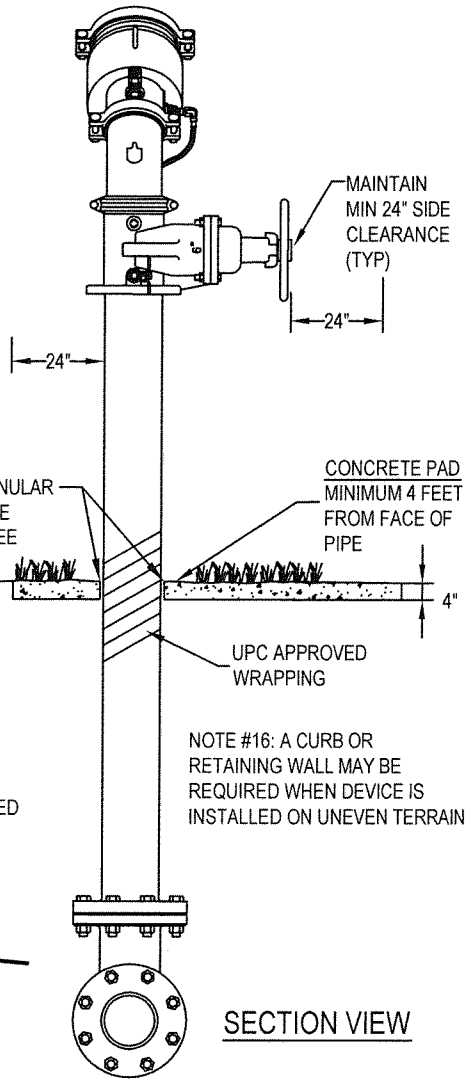

NOTES:

1. REDUCED PRESSURE PRINCIPLE TYPE BACKFLOW DEVICES SHALL BE WILKINS, FEBCO APPROVAL EQUAL PER USC LIST OF APPROVED BACKFLOWS.
2. REDUCED PRESSURE PRINCIPLE TYPE BACKFLOW DEVICES SHALL BE REQUIRED FOR THE PROTECTION OF THE PUBLIC WATER SUPPLY. (NO DOUBLE CHECK VALVE ASSEMBLIES, SEE AIR GAP)
3. BACKFLOW DEVICES SHALL BE INSTALLED ADJACENT TO AND ON PROPERTY SIDE OF SIDEWALK WHERE APPLICABLE. THE ASSEMBLY SHALL BE INSTALLED AS CLOSE AS POSSIBLE TO THE WATER METER AS APPROVED BY THE CITY'S CROSS CONNECTION PERSONNEL.
4. ALL DEVICES WILL HAVE RESILIENT SEATED SHUT - OFF VALVES. TEST COCKS WILL HAVE THREADED ENDS.
5. PRESS. DIFFERENTIAL VALVE OPENING TO BE 24" MINIMUM ABOVE GRADE
6. ALL PIPES AND SPOOLS SHALL BE DUCTILE IRON WITH NO EXCEPTIONS AND ALL JOINTS FLANGED.
7. ALL BOLTS/NUTS SHALL BE STAINLESS STEEL COMPONENTS WITH NO EXCEPTIONS.
8. ENTIRE ASSEMBLY (EXCLUDING I.D TAG) TO BE PAINTED WITH RESISTANT PAINT. (RUSTOLEUM, ETC.) GLOSS BLACK BRUSHED, NOT SPRAY.
9. DO NOT PAINT BRASS FITTINGS.
10. VALVE CONFIGURATION DECIDED ON JOB SITE.
11. ON SLOPING SURFACES, CONTRACTOR SHALL INSTALL A CONCRETE CURB/ WALL OR EQUIVALENT AROUND THE BACKFLOW.
12. THE PORTION OF THE TRENCH FROM BACK OF METER SHALL REMAIN OPEN UNTIL WATER DISTRIBUTION PERSONNEL HAVE INSPECTED AND APPROVED THE INSTALLATION, CALL 669-600-7322.
13. THE VALVE HANDWHEELS SHALL BE DOUBLE-LOCKED USING GALVANIZED STRAIGHT LINK CHAIN THAT LOCKS THE VALVE HANDWHEELS IN THE OPEN POSITION AND EITHER LOCK WILL RELEASE THE CHAIN.
14. BACKFLOW DEVICES SHALL BE LEAD FREE.
15. BACKFLOW ASSEMBLIES SHALL BE THE SAME SIZE AS THE METER.

VERTICAL ORIENTATION DOMESTIC RP ASSEMBLY BACKFLOW PREVENTION DEVICESIZE 2½" AND LARGER	APPROVED BY:	
	DATE: JUNE 30, 2006 **REVISED: MAY 2015**	DWG. **20B**

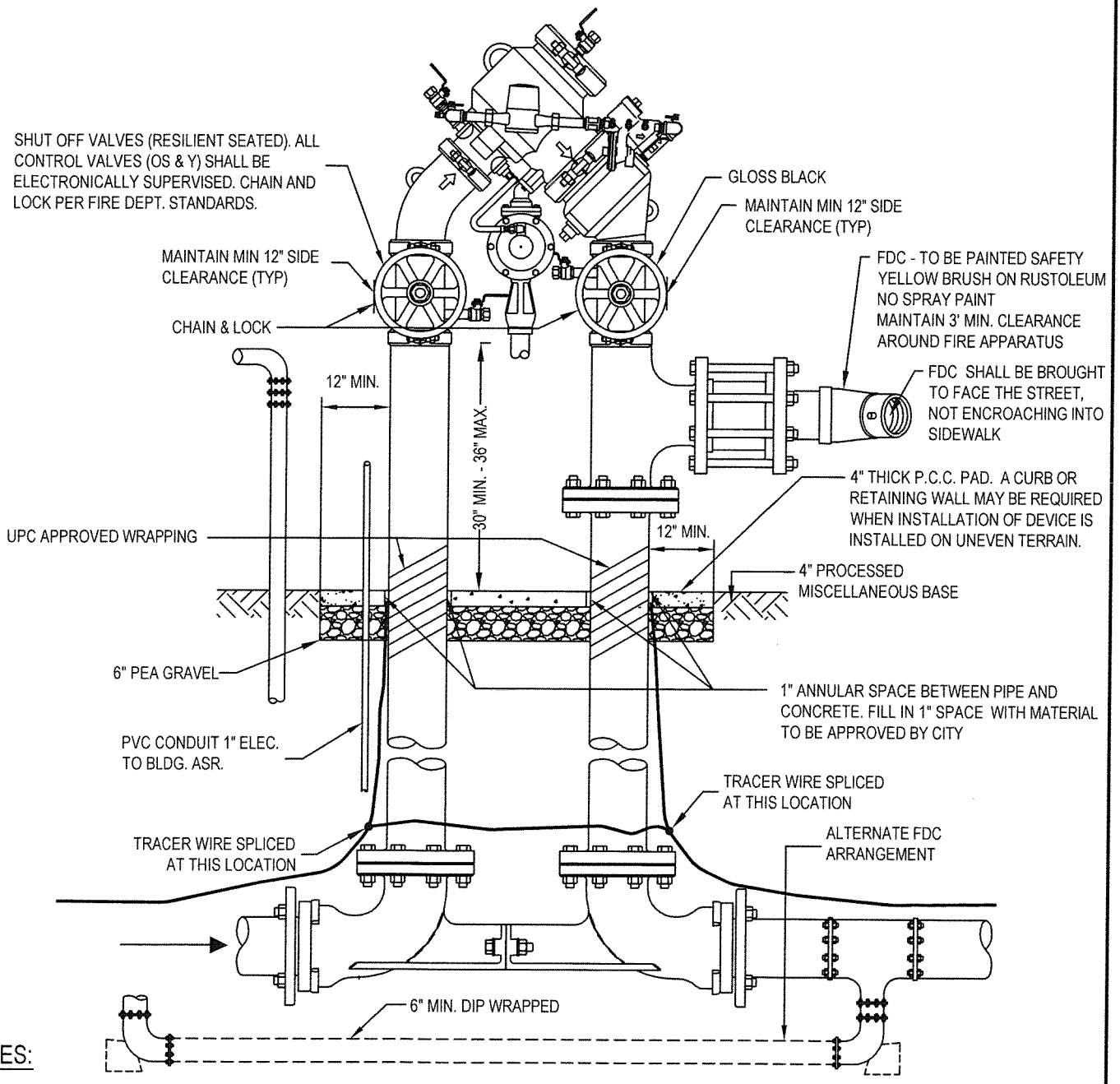

NOTES:

1. REDUCED PRESSURE DETECTOR ASSEMBLY SHALL BE WILKINS 475DA OR PRIOR APPROVED EQUAL (RPDA REQUIRED IF CHEMICALS ARE INTRODUCED TO SYSTEM).
2. ENTIRE BODY OF DEVICE (EXCLUDING I.D. TAG) TO BE PAINTED WITH TWO COATS OF #6 GLOSS BLACK RUSTOLEUM (NO SPRAY) BLACK UV AND WEATHER RESISTANT PAINT (RUSTOLEUM, ETC.), NO BRASS PARTS ARE TO BE PAINTED.
3. FDC TO BE PAINTED SAFETY YELLOW AND REMAIN VISIBLE AND ACCESSIBLE.
4. ALL PIPES AND SPOOLS SHALL BE DUCTILE IRON WITH NO EXCEPTIONS AND ALL JOINTS FLANGED. DIP TO BE PROTECTED WRAP CA-1200 POLYGUARD CA-14 MASTIC OR APPROVED EQUAL.
5. ALL TRIM HARDWARE TO BE BRASS OR BRONZE WITH NO EXCEPTIONS.
6. RADIO READ METER FEE TO BE PAID AT TIME OF PERMIT APPLICATION (METER TO BE INSTALLED BY CITY).
7. UNDERGROUND FITTINGS TO BE FUSION EPOXY COATED, CONNECTIONS TO BE FLANGED OR MEGALUG WITH FLUOROPLYMER (TRIPAC) COATED BOLTS AND NUTS OR 316 STAINLESS STEEL BOLTS AND NUTS OR A COMBINATION OF THE TWO.
8. FOR SECTION VIEW PLEASE SEE 20B.
9. THE PORTION OF THE TRENCH FROM BACK OF METER SHALL REMAIN OPEN UNTIL WATER DISTRIBUTION PERSONNEL HAVE INSPECTED AND APPROVED THE INSTALLATION, CALL 669-600-7322.
10. BACKFLOW DEVICES SHALL BE LEAD FREE.

FIRE SERVICE - REDUCED PRESSURE DETECTOR ASSEMBLY (RPDA)	APPROVED BY:	
	DATE : JUNE 30, 2006 **REVISED: MAY 2015**	DWG. **21B**

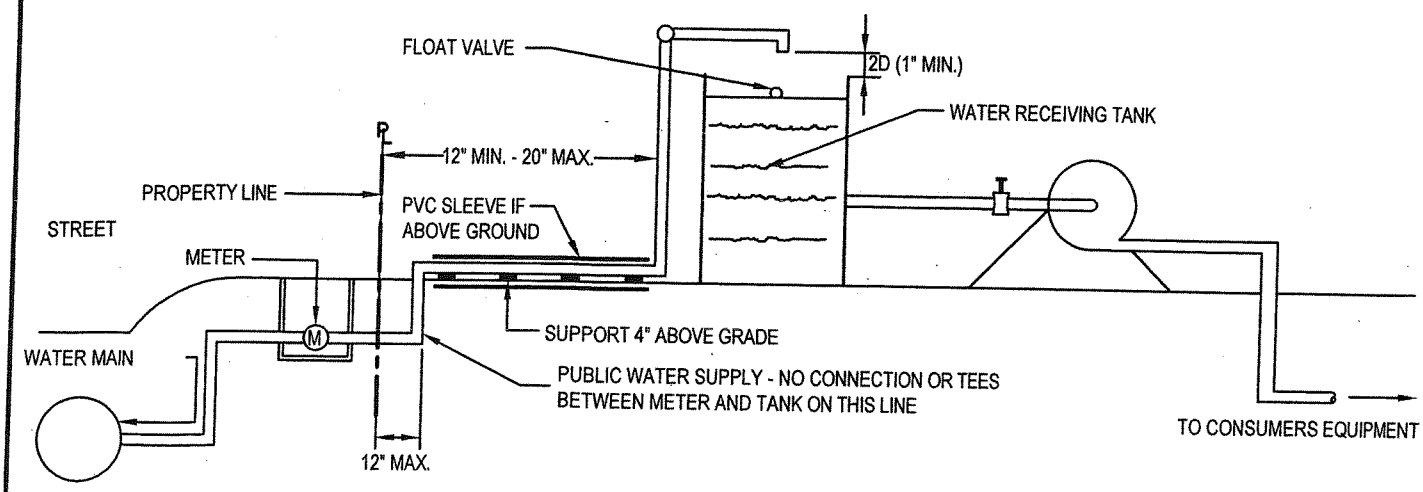

AIR GAP SEPARATION

NOTE:

1. TANK SHOULD BE OF SUBSTANTIAL CONSTRUCTION AND OF A KIND AND SIZE TO SUIT CONSUMERS NEEDS. TANK MAY BE SITUATED AT GROUND LEVEL (WITH A PUMP TO PROVIDE ADEQUATE PRESSURE HEAD) OR TO BE ELEVATED ABOVE GROUND.
2. THE METER SHALL REMAIN OFF UNTIL THE AIR GAP IS INSPECTED AND APPROVED BY THE WATER DISTRIBUTION PERSONNEL, CALL 408-730-7900.

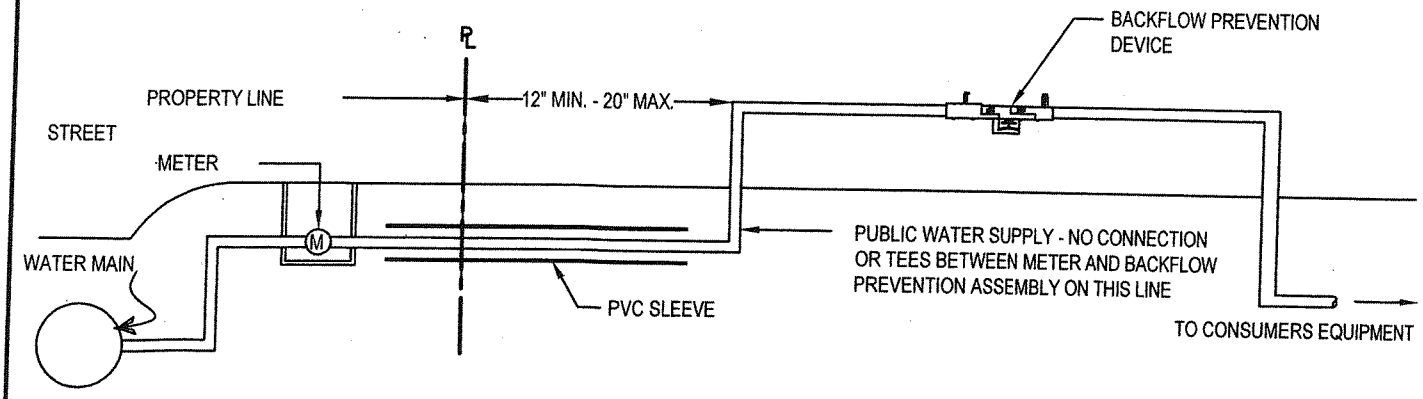

BACKFLOW PREVENTION ASSEMBLY

NOTE:

SEE DETAILS 18B & 18B-1

INSTALLATION OF BACKFLOW PREVENTION DEVICE	APPROVED BY:	
	DATE: JUNE 30, 2006 **REVISED: SEPTEMBER 2014**	**22B**

THRUST BLOCKS MISCELLANEOUS

NO SCALE

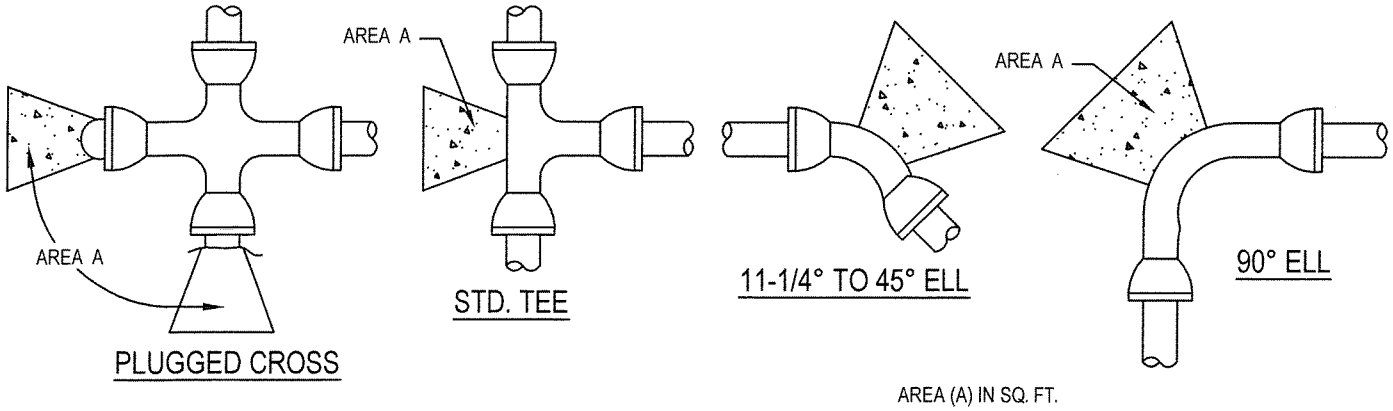

AREA (A) IN SQ. FT.

TYPE OF FITTING	SIZE OF PIPE					
	2"	4"	6"	8"	10"	12"
90° ELL	1	2	3.5	6	9	13
45° ELL	1	1	2	3.5	5	7
22 1/2° ELL	1	1	1	2	2.5	3.5
11 1/4° ELL	1	1	1	1	1.5	2
TEE	1	1	2.5	4.5	6.5	9

NOTE:

1. ALL THRUST BLOCKS SHALL BEAR AGAINST UNDISTURBED EARTH.
2. BASED ON SOIL BEARING VALUE OF 3,000 LBS. PER SQ. FT. AND WATER PRESSURE OF 200 PSI FORM AS REQUIRED TO KEEP HYDRAULIC FORCES OFF OF MECHANICAL JOINT OR FLANGE BOLTS.
3. PIPE SIZES GREATER THAN 12", PROVIDE DETAILED DESIGN FOR THRUST BLOCKS.
4. SAFE FACTORY IS 1.0.

THRUST BLOCKS FOR HORIZONTAL BENDS

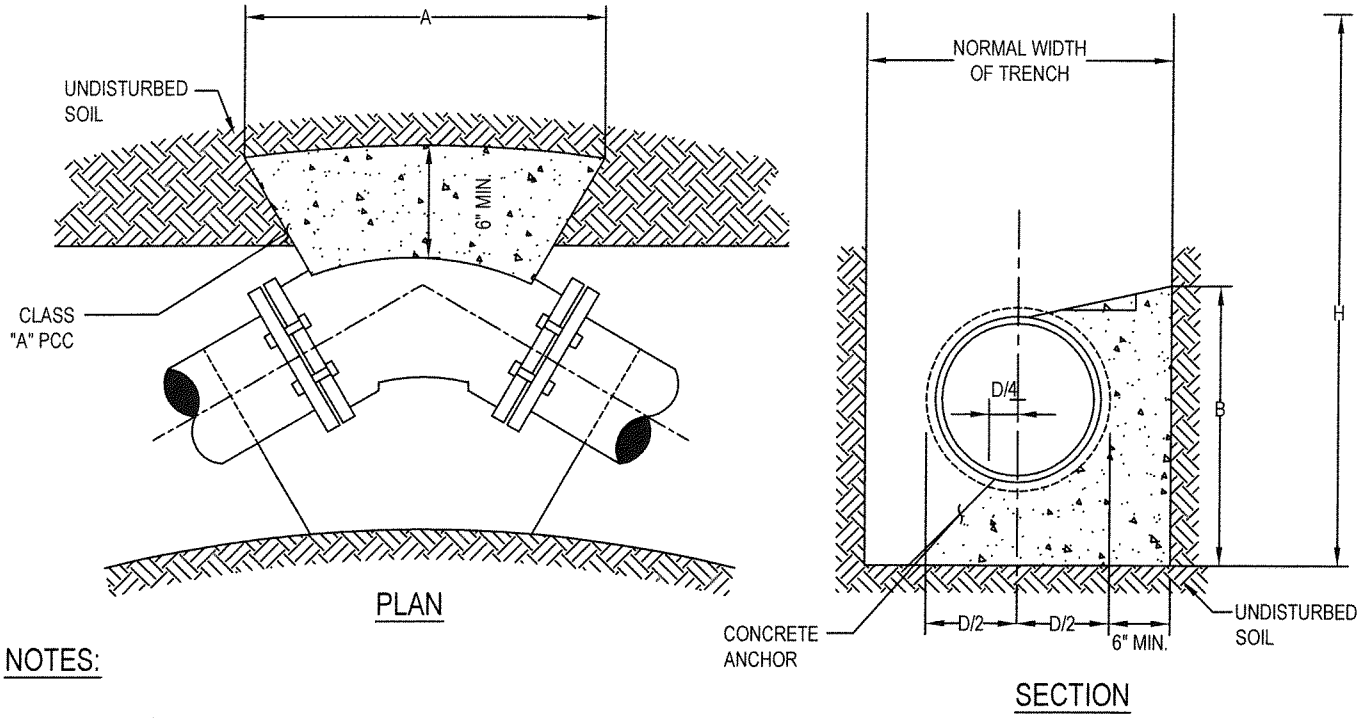

NOTES:

1. D = PIPE DIAMETER
2. WRAP FLANGES/BOLTS IN VISQUEEN
3. "A" DIMENSION MUST BE ATLEAST 2 TIMES THE "B" DIMENSION
4. "B" DIMENSION MUST BE LESS THAN HALF THE TOTAL DEPTH FROM THE GROUND SURFACE (H) (WIDTH SHALL BE AT LEAST TWICE THE HEIGHT)
5. A PASSIVE RESISTANT THRUST BLOCK IS REQUIRED IF THE HEIGHT OF THE THRUST BLOCK (B) IS GREATER THAN 0.5 TIMES THE DEPTH (H)
6. CONCRETE ANCHOR BLOCK3250 PSI AT 28 DAYS

THRUST BLOCKS

APPROVED BY:

DATE : JUNE 30, 2006
REVISED: SEPTEMBER 2014

DWG. **23B**

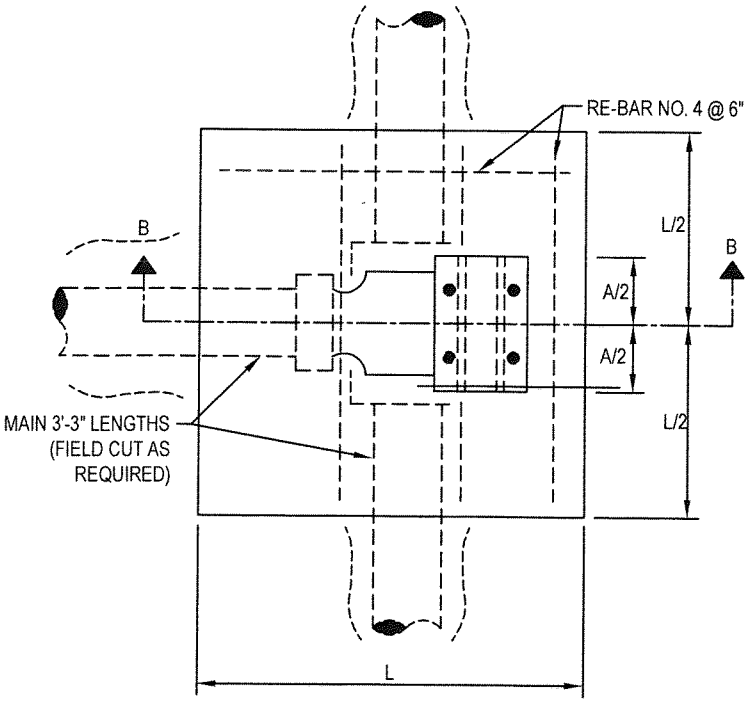

PLAN

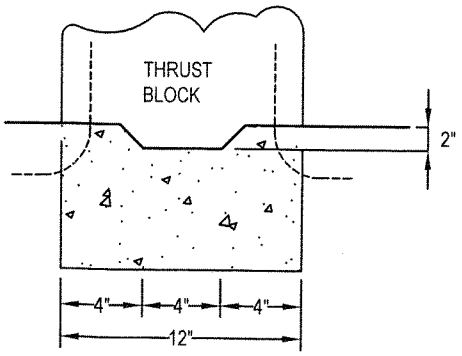

KEY DETAIL

NOTES:

1. ALL FITTING JOINTS WILL BE CLEAR OF ALL CONCRETE.
2. CONCRETE SHALL BE TYPE V.
3. USE 3' LENGTHS OF PIPE ONE EACH SIDE EVERY FITTING.

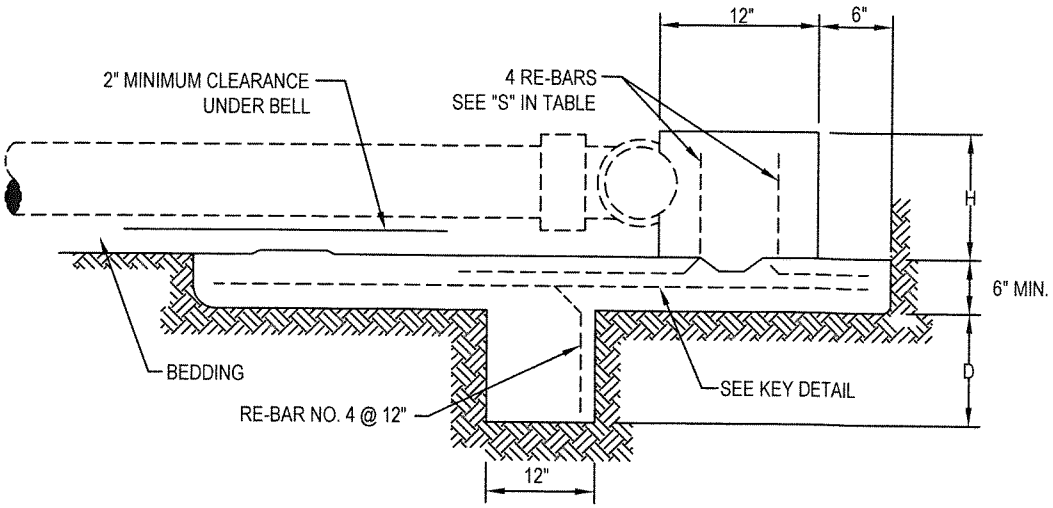

SECTION B-B

DIMENSION TABLE FOR TEE AND DEAD ENDS						
PIPE DIAMETER	TEE A	DEAD END A	D	H	L	RE-BAR "S" SIZE
6"	16"	8"	12"	12"	4'	NO. 4
8"	18"	10"	12"	14"	4'	NO. 4
10"	22"	12"	24"	16"	4'	NO. 5
12"	24"	14"	36"	18"	5'	NO. 6

NO SCALE

THRUST BLOCKS IN BAY MUD - 1 OF 2

APPROVED BY:

DATE : JUNE 30, 2006
REVISED: SEPTEMBER 2015

DWG. **24B**

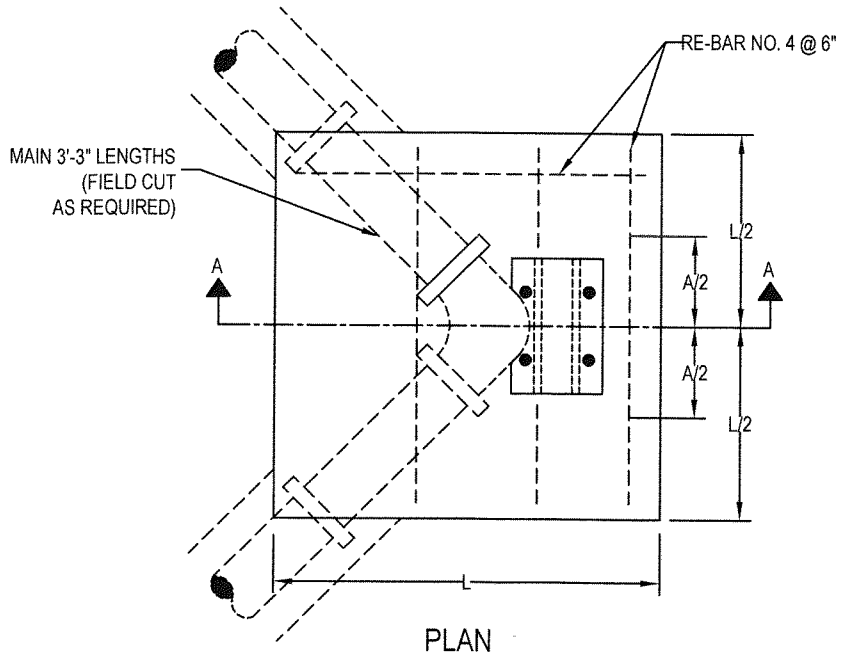

PLAN

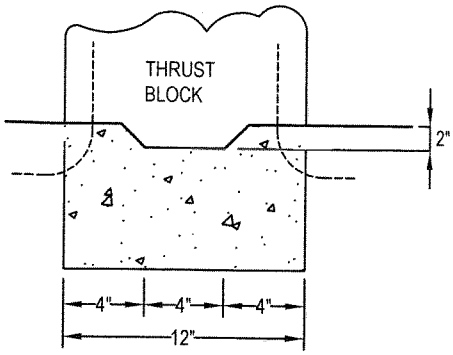

KEY DETAIL

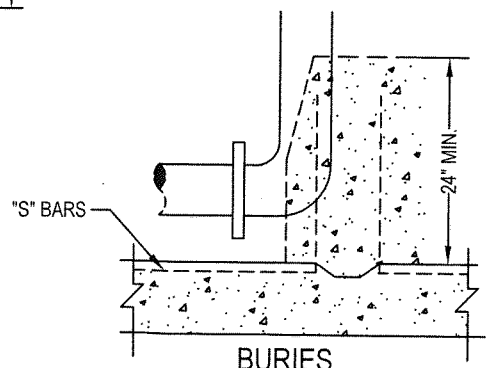

BURIES

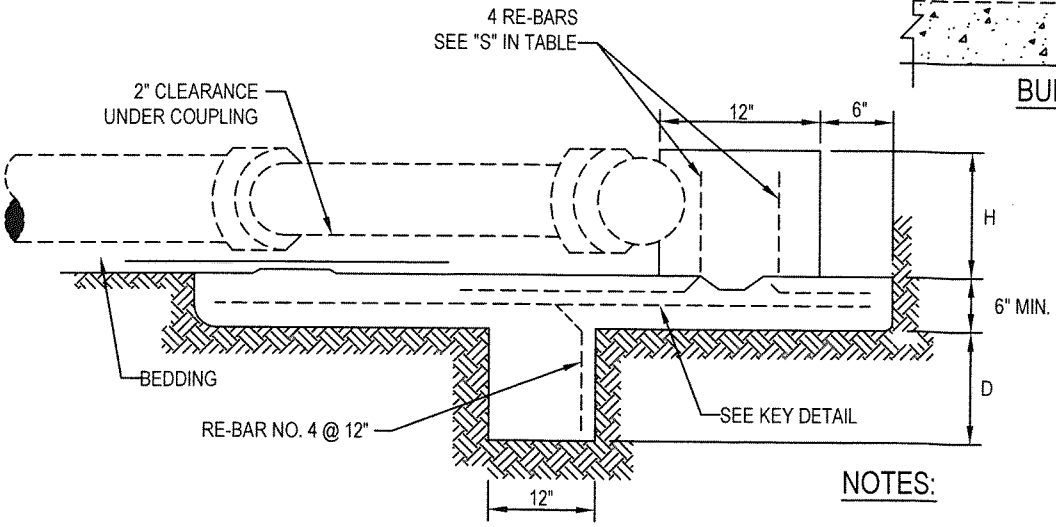

SECTION A-A

NOTES:

1. ALL FITTING JOINTS WILL BE CLEAR OF ALL CONCRETE.
2. CONCRETE SHALL BE TYPE V.
3. USE 3' LENGTHS OF PIPE ONE EACH SIDE EVERY FITTING.

DIMENSION TABLE FOR HORIZONTAL BENDS

PIPE DIAMETER	90 DEG BEND					45 DEG BEND					22 DEG 30' BEND					11 DEG 15' BEND				
	A	D	H	L	RE - BAR "S" SIZE	A	D	H	L	RE - BAR "S" SIZE	A	D	H	L	RE - BAR "S" SIZE	A	D	H	L	RE - BAR "S" SIZE
6"	15"	12"	12"	4'	NO. 4	10"	12"	12"	3'	NO. 4	8"	6"	12"	3'	NO. 4	7"	6"	12"	3'	NO. 4
8"	18"	12"	14"	4'	NO. 4	12"	12"	14"	4'	NO. 4	9"	6"	14"	3'	NO. 4	8"	6"	14"	3'	NO. 4
10"	23"	24"	16"	5'	NO. 5	13"	12"	16"	4'	NO. 5	11"	12"	16"	4'	NO. 4	9"	6"	16"	3'	NO. 5
12"	26"	36"	18"	5'	NO. 6	15"	24"	18"	4'	NO. 5	13"	12"	18"	4'	NO. 4	10"	6"	18"	4'	NO. 5

NO SCALE

THRUST BLOCKS IN BAY MUD - 2 OF 2

APPROVED BY:

DATE : JUNE 30, 2006
REVISED: SEPTEMBER 2015

DWG. **25B**

NOTES:

1. ALL BOND CABLE SHALL BE INSTALLED AT MINIMUM LENGTH.
2. BOND CABLES SHALL NOT BE INSTALLED ACROSS INSULATING JOINTS.
3. ONE ADDITIONAL CABLE SHALL BE REQUIRED FOR PIPE DIAMETERS FROM 36" TO 48" AND 2 MORE FOR DIAMETERS LARGER THAN 48".
4. BOND CABLES ARE TO BE INSTALLED ONLY AT THE RECOMMENDATION OF THE DESIGN ENGINEER AND WITH THE APPROVAL OF THE CITY ENGINEER.

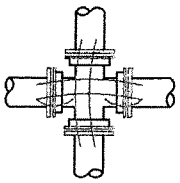

CROSS

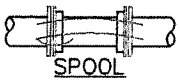

SPOOL

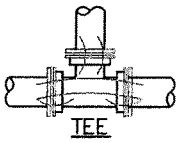

TEE

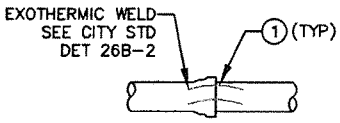

BELL AND SPIGOT PIPE JOINT

FLANGED VALVE

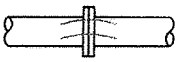

FLANGED OR MECHANICAL PIPE JOINT

FLEXIBLE COUPLING PIPE JOINT

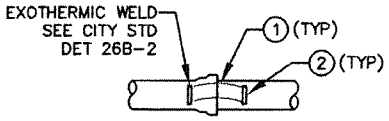

NON-MORTAR LINED BELL AND SPIGOT

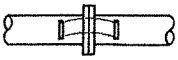

NON-MORTAR LINED FLANGED

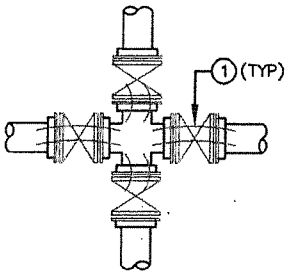

VALVE CROSSING

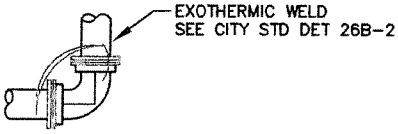

BEND

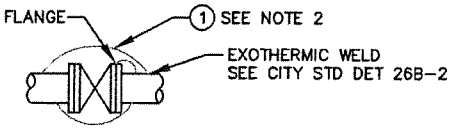

BOND ACROSS FLANGES

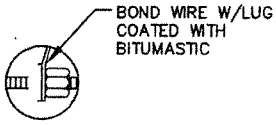

DETAIL A

WIRE CONNECTION TO FLANGE BOLT SEE NOTE 4

ITEM CALL OUT:

1. BOND CABLE: AWG #6
   STRANDED: ASTM B8
   COPPER: ASTM B3
   INSULATED: ASTM D1248
   TYPE 1, CLASS C, GRADE 5
2. STEEL PLATE, 1/8" THICK WELD TO THE PIPE.

EXOTHERMIC WELDING DETAIL - 1

APPROVED BY:

DATE : DEC 2014
REVISED : –

DWG. 26B - 1

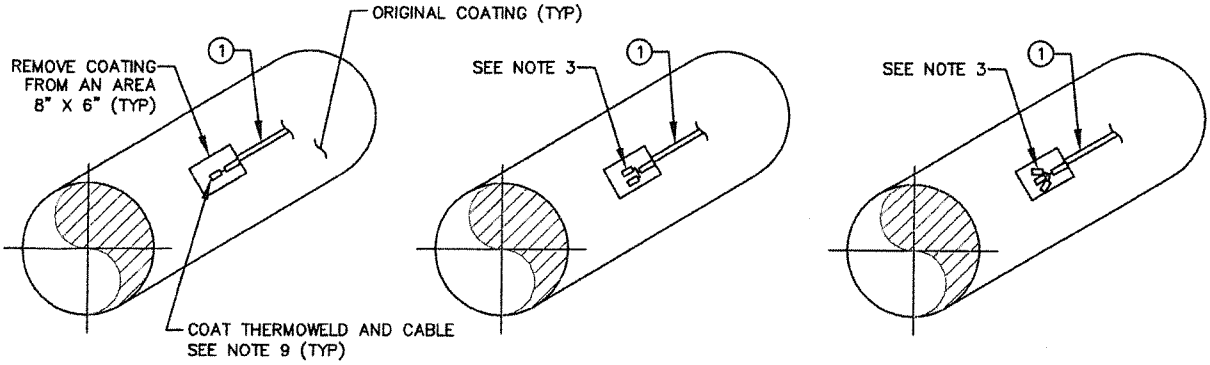

DETAIL 1

CONNECTIONS OF #6 AWG CABLE AND SMALLER (TYP)

DETAIL 2

CONNECTIONS OF #4 AWG CABLE (TYP)

DETAIL 3

CONNECTIONS OF #2 AWG CABLE AND LARGER (TYP)

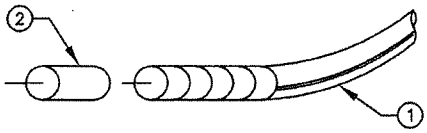

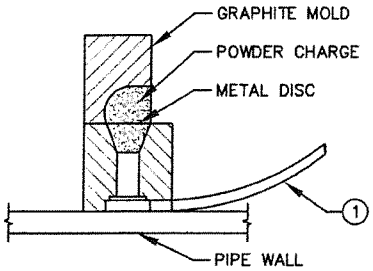

EXOTHERMIC CONNECTION DETAIL

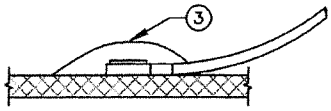

EXOTHERMIC CONNECTION SECTION

NOTES:

1. CLEAN AREA OF STEEL SURFACE APPROXIMATELY 2"X2" FOR EACH THERMOWELD CONNECTION. WIRE BRUSH FILE AND SCRAPE TO OBTAIN SSPC-SP-5 WHITE METAL SURFACE FINISH.
2. SELECT PROPER MOLD BASED ON STRUCTURE GEOMETRY, ORIENTATION, AND MATERIAL TYPE.
3. STRIP CABLE END AND TWIST TO FIT THERMOWELD MOLD. CABLE SIZES LARGER THAN #6 AWG SHALL BE THERMOWELDED BY TWISTING CONDUCTORS INTO GROUPS APPROXIMATELY #6 AWG CABLE SIZE. MINIMUM SPACING BETWEEN WELDS SHALL BE DETERMINED BY MOLD GEOMETRY, NOMINALLY 3".
4. HOLD MOLD FIRMLY AGAINST PIPE WITH OPENING AWAY FROM THE OPERATOR. IGNITE WITH WELDING FLINT LIGHTER.
5. REMOVE ALL WELD SLAG, SPLATTER, SHARP EDGES, AND BURBS WITH CHIP HAMMER AND METAL FILE.
6. TEST STRENGTH OF CONNECTION BY LIGHTLY TAPPING WITH 1 LB HAMMER, AND PULL WITH 5 LB FORCE ON CABLE.
7. WIPE PIPE SURFACE WITH CLEAN, OIL FREE RAGS TO REMOVE ANY LOOSE DUST.
8. PRIME CLEANED SURFACE WITH APPROVED PRIMER.
9. COAT THERMOWELD AND 6" OF CABLE TAIL WITH COMPATIBLE COATING, SUCH THAT ALL CORNERS ARE FILLED. THE COATING SHALL EXTEND FOR AT LEAST 2" AROUND THE THERMOWELD.
10. THERMOWELD CARTRIDGE SIZE SHALL BE COMPATIBLE TO STEEL MATERIALS. MULTIPLE POWER CARTRIDGE CHARGERS SHALL NOT BE USED. IF A THERMOWELD MUST BE REPEATED, A NEW PIPE SURFACE MUST BE PREPARED AT LEAST 3" FROM THE ORIGINAL WELD ATTEMPT. MORE THAN ONE WELD ATTEMPT ON THE SAME SPOT SHALL NOT BE PERMITTED.
11. IN NON-CONCRETE LINED PIPES, ALL EXOTHERMIC WELDS SHALL BE MADE IN A STEEL PAD.

CABLE SIZE	NO. OF STRANDS	NO. OF EXOTHERMIC GROUPS PER CABLE CONNECTION	CABLE STRANDS PER GROUP
8	19	1	19
6	7	1	7
	19		19
4	7	2	3-4
	19		10-9
2	7	3	3-2-2
	19		7-6-6

ITEMS CALL OUT:

1. CABLE: AWG SIZE, ASTM B388 ASTM D-1248, TYPE 1, CLASS C, GR5 INSULATION
2. SLEEVE: ADAPTER
3. APPROVED PRIMER AND WELD CAP OR MORTAR OVER WELD LOCATION

EXOTHERMIC WELDING DETAIL - 2

APPROVED BY:

DATE : DEC 2014

REVISED : -

DWG. 26B - 2

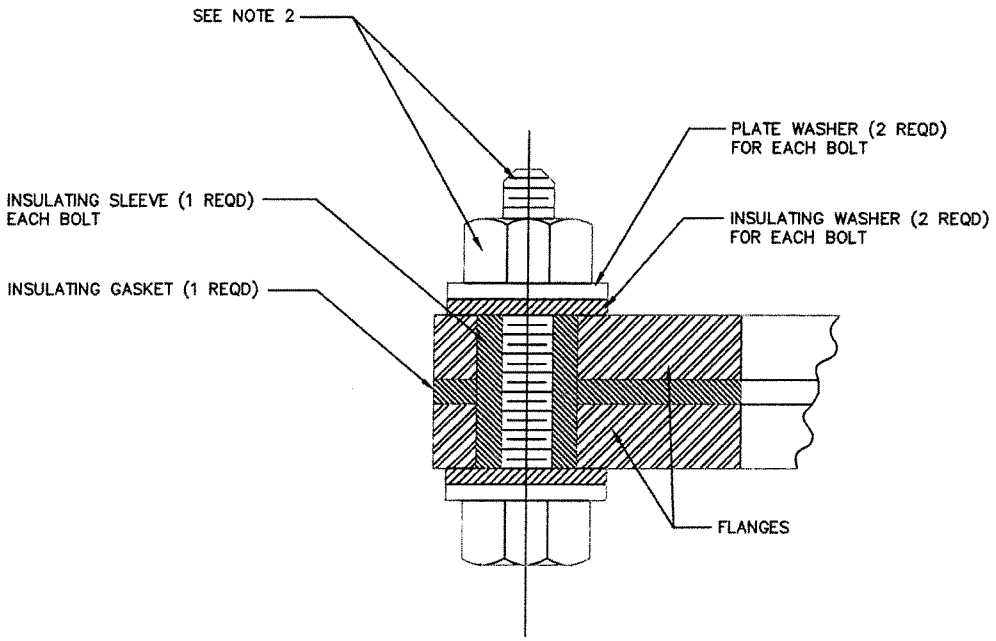

NOTES:

1. WHEREVER POSSIBLE INSULATING FLANGE ASSEMBLIES SHALL BE ASSEMBLED PRIOR TO INSTALLATION AND TESTED ELECTRICALLY USING GAS ELECTRONIC TOOL OR APPROVED EQUAL TO INSURE THAT THE INSTALLATION IS EFFECTIVE.
2. POLYWRAP BELOW GROUND INSULATING FLANGE ASSEMBLIES WITH APPROVED TAPE PER AWWA C217.
3. INSULATING FLANGE BOLT HOLE DIAMETER SHALL BE ⅛ INCH BIGGER THAN THE INSULATING SLEEVE OUTSIDE DIAMETER.
4. TORQUE BOLTS PER INSULATING FLANGE SET MANUFACTURERS RECOMMENDATIONS.

INSULATING FLANGE DETAIL	APPROVED BY:	
	DATE : DEC 2014 **REVISED : –**	DWG. **27B**

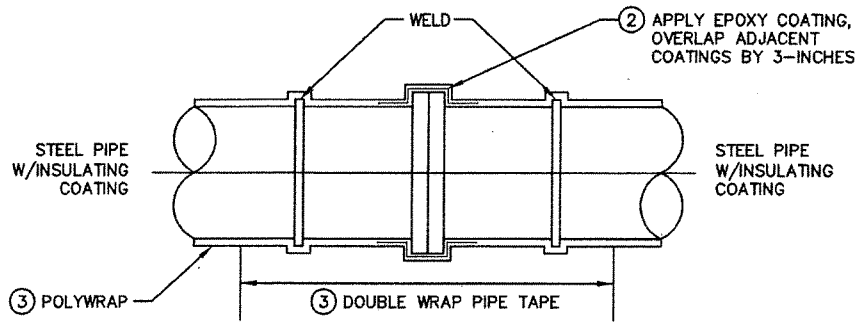

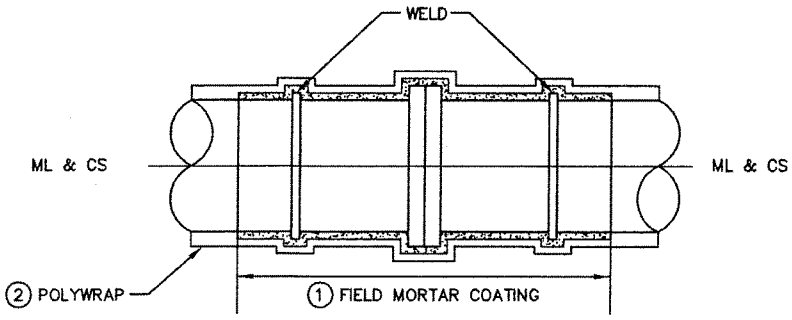

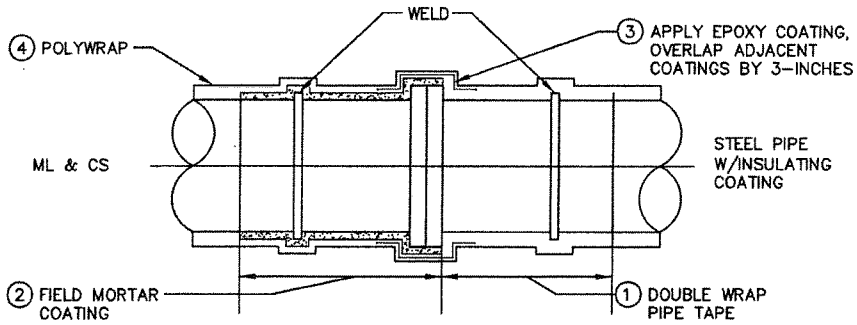

NOTES:

1. NUMBERS IN CIRCLES INDICATE SEQUENCE OF COATING OPERATION.
2. "ML & CS" IS MORTAR LINED AND COATED STEEL PIPE.
3. WHERE CEMENT MORTAR COATED CI PIPE IS ENCOUNTERED, FIELD COATING SHALL BE THE SAME AS FOR ML & CS.
4. INSULATING COATING INCLUDES COAL TAR ENAMEL, PLASTIC AND COAL TAR EPOXY.
5. FIELD MORTAR COATING TO A MINIMUM THICKNESS OF ¾ INCH SHALL BE APPLIED OVER A 2" X 4" 0.5 WIRE MESH REINFORCEMENT. DO NOT BRIDGE FLANGES WITH WIRE MESH OR TIE RODS.
6. BACKFILL TO BE FREE OF ROCKS AND CLODS. AVOID DAMAGE TO COATING DURING BACKFILLING OPERATIONS;
7. POLYWRAP, EPOXY COATING, AND PIPE TAPE SHALL CONFORM TO CITY STD SPECIFICATIONS. EXTEND POLYWRAP AT LEAST 12 INCHES ONTO UNDISTURBED PIPE EACH SIDE OF INSULATING JOINT.
8. ASSEMBLE ALL FLANGED INSULATING JOINTS IN THE SHOP WHENEVER POSSIBLE AND CALL CITY ENGINEER TO CHECK THEM BEFORE INSTALLING.

FLANGED STEEL INSULATING JOINT INSTALLATION DETAILS - 1	APPROVED BY:	
	DATE : DEC 2014 **REVISED : –**	DWG. **27B-1**

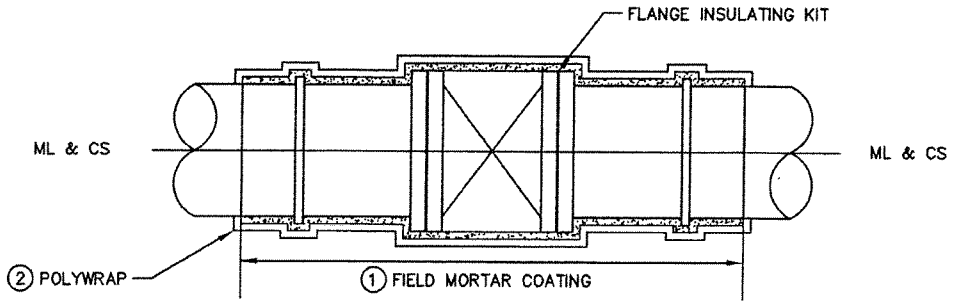

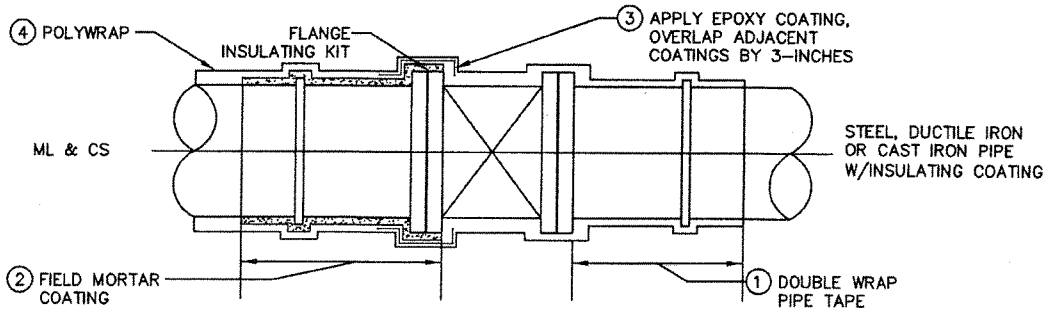

NOTES:

1. NUMBERS IN CIRCLES INDICATE SEQUENCE OF COATING OPERAITON.
2. "ML & CS" IS MORTAR LINED AND COATED STEEL PIPE.
3. WHERE CEMENT MORTAR COATED CI PIPE IS ENCOUNTERED, FIELD COATING SHALL BE THE SAME AS FOR ML & CS.
4. INSULATING COATING INCLUDES COAL TAR ENAMEL, PLASTIC AND COAL TAR EPOXY.
5. FIELD MORTAR COATING TO A MINIMUM THICKNESS OF 3/4" SHALL BE APPLIED OVER A 2" X 4" 0.5 WIRE MESH REINFORCEMENT. DO NOT BRIDGE FLANGES WITH WIRE MESH OR TIE RODS.
6. BACKFILL TO BE FREE OF ROCKS AND CLODS. AVOID DAMAGE TO COATING DURING BACKFILLING OPERATIONS;
7. POLYWRAP, EPOXY COATING, AND PIPE TAPE SHALL CONFORM TO CITY STD SPECIFICATIONS. EXTEND POLYWRAP AT LEAST 12 INCHES ONTO UNDISTURBED PIPE EACH SIDE OF INSULATING JOINT.
8. ASSEMBLE ALL FLANGED INSULATING JOINTS IN THE SHOP WHENEVER POSSIBLE AND CALL CITY FOR INSPECTION PRIOR TO INSTALLING.

FLANGED FITTING INSULATING JOINTS INSTALLATION DETAIL - 2	APPROVED BY:	
	DATE : DEC 2014 **REVISED : -**	DWG. **27B-2**

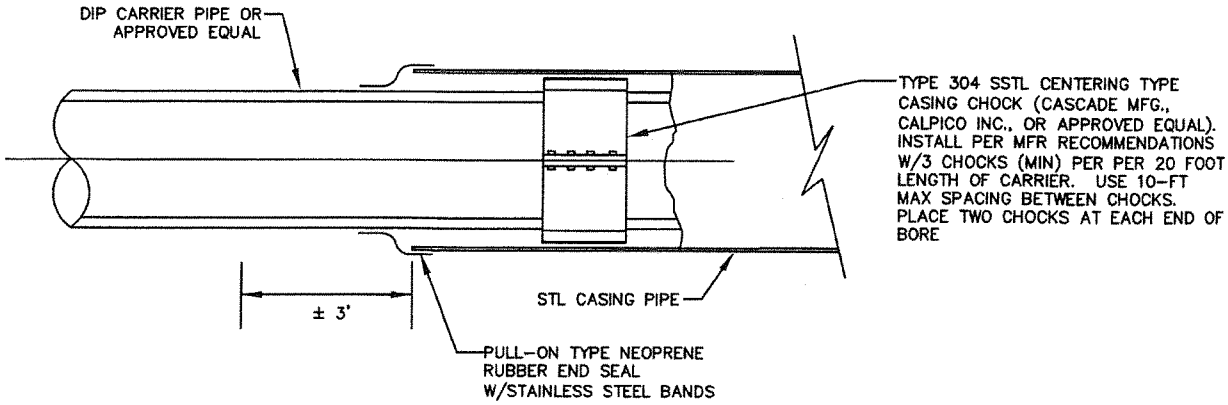

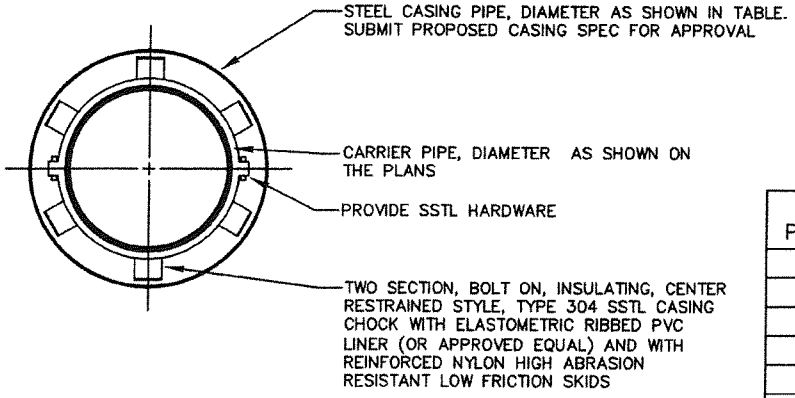

CARRIER PIPE DIAMETER	MINIMUM CASING DIAMETER REQ'D
6"	12"
8"	16"
12"	20"
15"	24"
18"	30"
24"	36"
>24"	BY ENGINEER

NOTES:

1. BORINGS SHALL BE AT 90 DEGREES TO ALL CROSSINGS UNLESS OTHERWISE APPROVED. THE BORING OF THE HOLE AND INSTALLATION OF THE CASING PIPE SHALL BE SIMULTANEOUS. BORE HOLE DIAMETER SHALL ESSENTIALLY BE THE SAME AS THE OUTSIDE DIAMETER OF THE CASING PIPE TO BE INSTALLED.
2. STEEL PIPE CASING SHALL BE SMOOTH STEEL PIPE FABRICATED IN SECTIONS IN ACCORDANCE WITH AWWA C201. LENGTHS OF CASING PIPE SHALL BE AS LONG AS PRACTICAL FOR SITE CONDITIONS.
3. JOINTS SHALL CONFORM TO THE REQUIREMENTS OF AWWA C206. JOINTS BETWEEN SECTIONS SHALL BE COMPLETELY WELDED TO THE PRECEDING SECTIONS. PRIOR TO WELDING JOINTS, THE CONTRACTOR SHALL ENSURE THAT BOTH ENDS OF THE CASING SECTIONS BEING WELDED ARE SQUARE.
4. STEEL PIPE CASING WALL THICKNESS SHALL BE AS SPECIFIED BY DESIGN ENGINEER. VERIFY CASING SIZES AND SIZING OF CASING INSULATORS PRIOR TO ORDERING.
5. CASING END SEALS SHALL BE SYNTHETIC NEOPRENE RUBBER PULL-ON TYPE END SEALS WITH STAINLESS STEEL BANDS.
6. FOR OPEN TRENCH INSTALLATIONS, THE CASING SHALL BE SUPPORTED BY A MINIMUM OF TWO (2) CONCRETE SUPPORT PADS AT BOTH ENDS. MORE SUPPORT MAY BE REQUIRED DEPENDING ON SITE CONDITIONS.
7. ANNULAR SPACE BETWEEN CASING AND CARRIER PIPE SHALL REMAIN FREE OF MATERIAL UNLESS OTHERWISE APPROVED BY THE CITY ENGINEER.
8. CHOCK SHALL PROVIDE A MINIMUM CLEARANCE OF ¾ INCH BETWEEN THE CARRIER PIPE'S GREATEST OUTSIDE DIAMETER AND THE CASING PIPE'S INSIDE DIAMETER.
9. ALL JOINTS WITHIN THE CASING SHALL BE FULLY RESTRAINED.

PIPE CASING DETAIL

APPROVED BY:

DATE : DEC 2014
REVISED : –

DWG. 28B

TOP VIEW

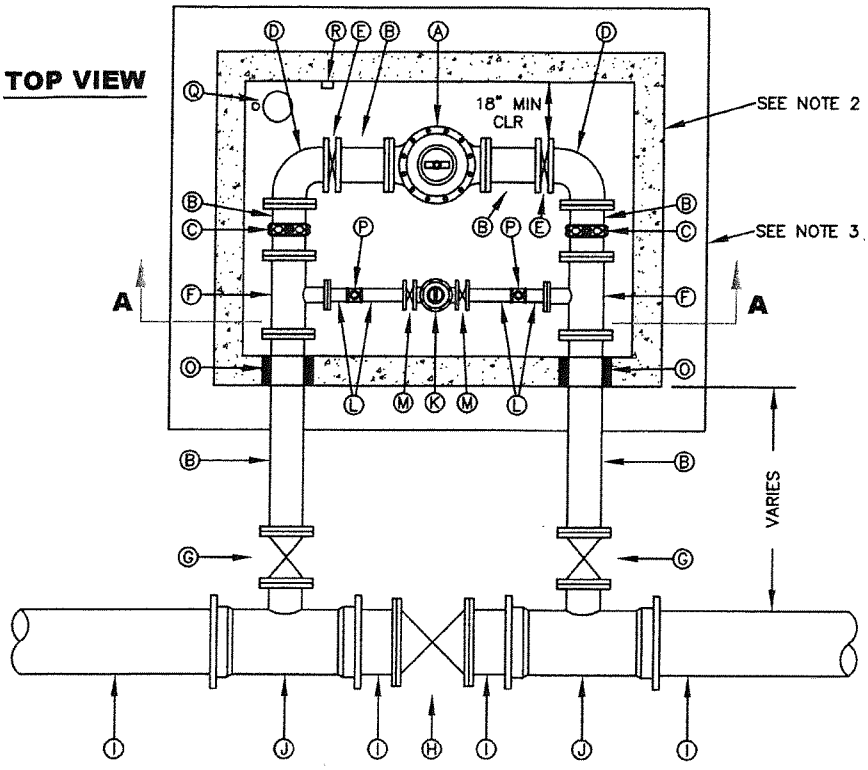

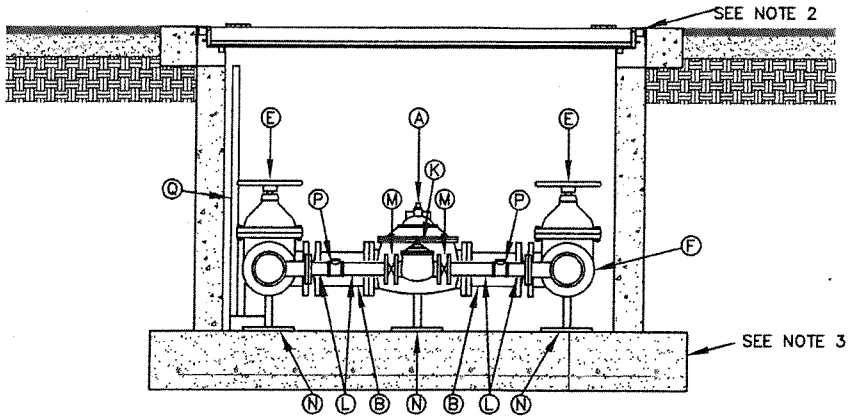

SECTION A-A

NOTES:

1. INSTALLATION SHALL GENERALLY BE FOR A MAIN-LINE 12 INCH AND SMALLER. INSTALLATION OF OTHER SIZED VALVES IS SIMILAR.
2. VALVE VAULT LID SHALL BE A HYDRAULICALLY ASSISTED DOUBLE LEAF H-20 ALUMINUM COVER. VALVE VAULT SHALL BE BY JENSEN PRECAST OR APPROVED EQUAL. VAULT DIMENSIONS SHALL BE SIZED APPROPRIATELY TO ACCOMMODATE ALL APPURTENANCES AND MUST BE APPROVED BY THE CITY'S WATER OPERATIONS DIVISION.
3. CONCRETE FOOTING SHALL EXTEND 12 INCH MINIMUM ON ALL SIDES OF VALVE VAULT WALLS. FOOTING SHALL BE CONSTRUCTED WITH No.5 REBAR AT 12 INCH ON CENTER EACH WAY.
4. SUMP PUMP SHALL BE BY DAYTON PUMPS OR CITY APPROVED EQUAL.
5. FLOOR SHALL BE SLOPED TOWARDS SUMP PUMP DRAIN.
6. SUMP PUMP SHALL BE 12 INCH DIAMETER AND BE PARTIALLY FILLED WITH 1/2 INCH DRAIN ROCK. THE DRAIN PIPING SHALL BE PVC HARD PLUMBED TO THE TOP OF THE VAULT CORNER WITH MALE QUICK CONNECTION.
7. VAULT FLOOR SHALL NOT EXCEED 6 FEET IN DEPTH UNLESS APPROVED BY THE CITY ENGINEER.
8. A VERTICAL FIBERGLASS LADDER SHALL BE INSTALLED IN POWDER COATED SAFETY YELLOW WITH NON-SLIP LADDER RUNGS AND WITH A LADDER-UP SAFETY POST, AS MANUFACTURED BY BILCO OR CITY APPROVED EQUAL. LOCATION OF LADDER SHALL BE AS APPROVED BY CITY ENGINEER.
9. ELECTRICAL OUTLET SHALL BE INSTALLED IN PRV VAULT IF FEASIBLE. CONSULT CITY ENGINEER REGARDING IF THIS REQUIREMENT CAN BE WAIVED.

ITEM CALL OUT:

A. FLANGED PRESSURE REDUCING VALVE WITH SURGE RELIEF PILOT FOR HIGH FLOWS.
B. FLANGED DUCTILE IRON SPOOL.
C. TAPPING SADDLE WITH CORPORATION STOP, BRONZE TEE, AND 3/4 INCH PLUGS.
D. FLANGED 90° BEND.
E. BUTTERFLY VALVE.
F. FLANGED REDUCING TEE.
G. FLANGED GATE VALVE WITH VALVE BONNET BOX AND COVER.
H. GATE VALVE (CLOSED) SIZE AS SPECIFIED, WITH VALVE BONNET BOX, COVER, AND STAR NUT.
I. MAINLINE, SIZE AS SPECIFIED.
J. MECHANICAL JOINT REDUCING TEE WITH FLANGED BRANCH, MAINLINE SIZE AND BRANCH SIZE AS SPECIFIED.
K. FLANGED PRESSURE REDUCING VALVE WITH SURGE RELIEF PILOT FOR LOW FLOWS.
L. FLANGED BRASS OR DUCTILE IRON SPOOL.
M. BUTTERFLY VALVE.
N. VALVES INSTALLED WITH PIPE SUPPORTS AS REQUIRED.
O. WALL SLEEVES AND RUBBER SEAL.
P. TAPPING SADDLE WITH CORPORATION STOP, BRONZE TEE, AND 3/4 INCH PLUGS.
Q. SUMP PUMP AND PIPING. SEE NOTES 4, 5, AND 6.
R. ELECTRICAL OUTLET. SEE NOTE 9.

BYPASS PRESSURE REDUCING VALVE VAULT DETAIL

APPROVED BY:

DATE : DEC 2014	DWG.	29B
REVISED : –		

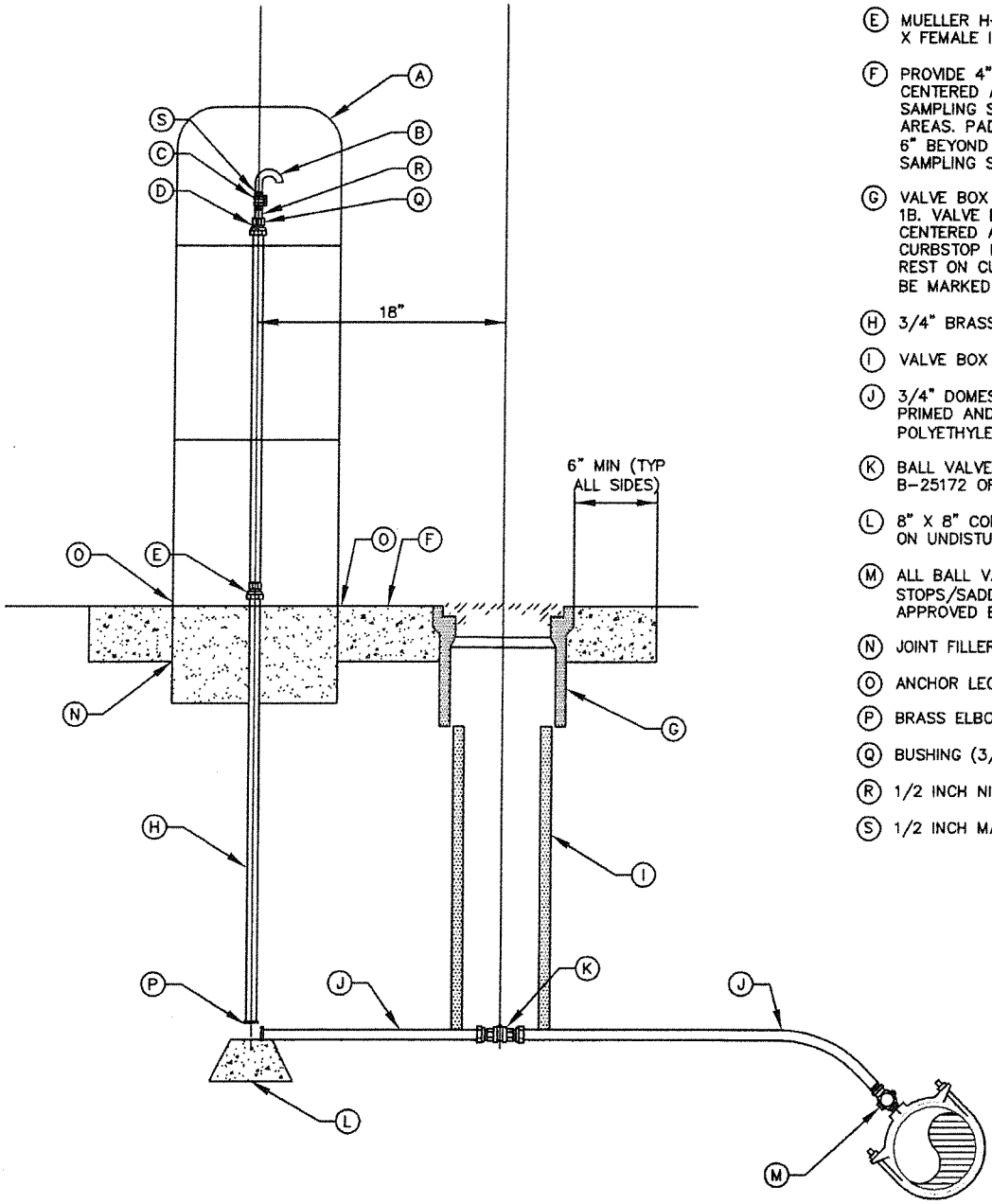

ITEM CALL OUT:

(A) SAMPLING STATION HOUSING. PIPELINE PRODUCTS WTS-858E OR APPROVED EQUAL. (COLOR – HUNTER GREEN). MAINTAIN 24" CLEAR SPACE ON ALL SIDES.

(B) 120° BEND 1/2" DOMESTIC COPPER SOFT TYPE K.

(C) 1/2" BALL VALVE X FEMALE IP.

(D) MUELLER H-15451: 3/4 COMPRESSION X FEMALE IP.

(E) MUELLER H-15451: 3/4" COMPRESSION X FEMALE IP.

(F) PROVIDE 4" THICK CONCRETE PAD CENTERED AROUND VALVE BOX AND SAMPLING STATION IF OUTSIDE OF PAVED AREAS. PAD SHALL EXTEND A MINIMUM OF 6" BEYOND ALL SIDES OF VALVE BOX AND SAMPLING STATION.

(G) VALVE BOX ASSEMBLY PER CITY STD DET 1B. VALVE BOX ASSEMBLY SHALL BE CENTERED AND PLUM ON AXIS OF CURBSTOP NUT. VALVE BOX SHALL NOT REST ON CURBSTOP ASSEMBLY. LID SHALL BE MARKED 'WATER'.

(H) 3/4" BRASS.

(I) VALVE BOX 8" PVC SCH 40 RISER.

(J) 3/4" DOMESTIC COPPER SOFT TYPE K PRIMED AND TAPED WITH 20 MIL POLYETHYLENE TAPE-1/2 LAPPED.

(K) BALL VALVE CURBSTOP.SHALL BE MUELLER B-25172 OR CITY APPROVED EQUAL.

(L) 8" X 8" CONCRETE PIER BLOCK RESTING ON UNDISTURBED NATIVE SOIL.

(M) ALL BALL VALVES/CORPORATION STOPS/SADDLES SHALL BE MUELLER OR APPROVED EQUAL.

(N) JOINT FILLER

(O) ANCHOR LEGS (3 REQUIRED)

(P) BRASS ELBOW

(Q) BUSHING (3/4 TO 1/2 INCH)

(R) 1/2 INCH NIPPLE

(S) 1/2 INCH MALE IP X 1/2 COMPRESSION

SAMPLE STATION DETAIL

APPROVED BY:

DATE : DEC 2014	DWG.	30B-1
REVISED : –		

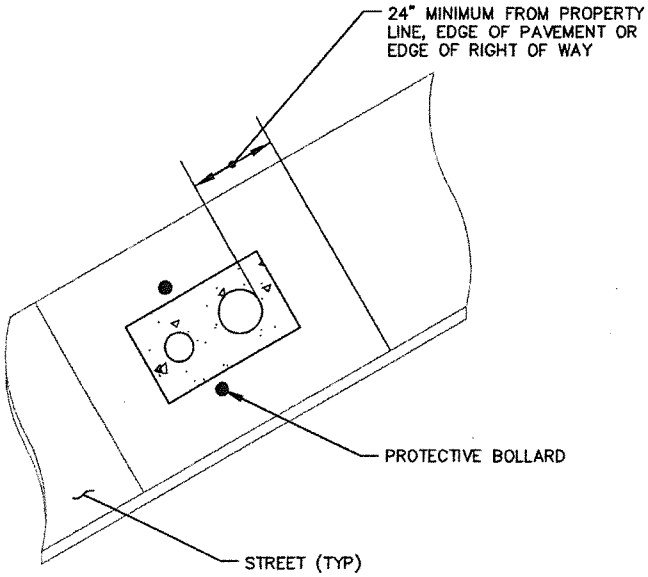

NO CURB OR ROLLED CURB

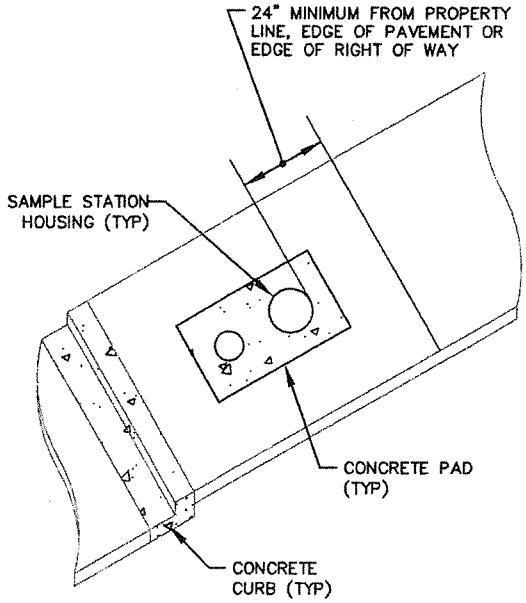

WITH CURB AND NO SIDEWALK

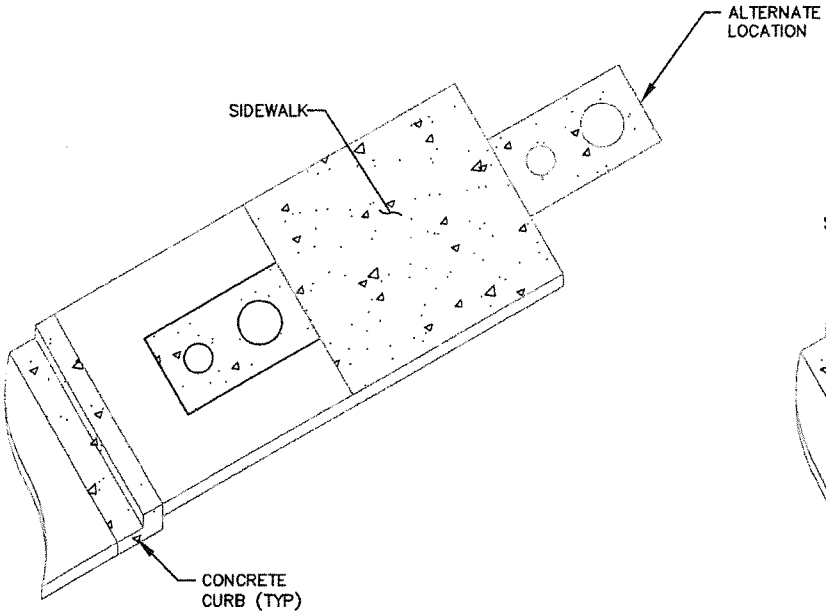

NON–CONTIGUOUS SIDEWALK

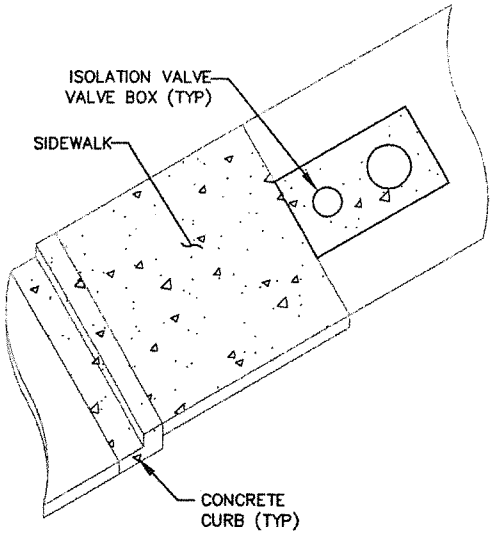

CONTIGUOUS SIDEWALK

SAMPLE STATION LOCATION	APPROVED BY:	
	DATE : DEC 2014 **REVISED : –**	DWG. **30B-2**

ASPHALT CONCRETE, CAST IRON, AND DUCTILE IRON MAINS

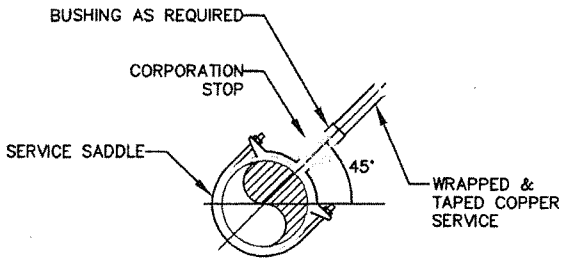

1" – 2" CONNECTIONS

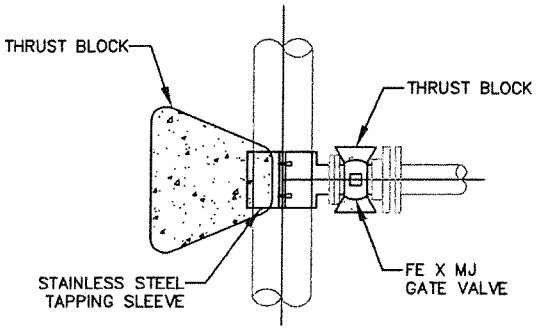

4" – 12" CONNECTIONS

NOTES:

1. REPAIR OR REPLACE MORTAR IN KIND AS REQUIRED.
2. WHEN MAIN IS POLYWRAPPED, REPAIR, AND EXTEND POLYWRAP TO COVER 6 INCHES OF SERVICE LINE.
3. MACHINE BORE AFTER WELDING (CUTTER O.D. SHALL BE ½ INCH LESS THAN NOMINAL SIZE).
4. STEEL PIPE FLANGE SHALL BE PERPENDICULAR TO SURFACE.
5. DIELECTRIC INSULATING FLANGE KIT SHALL BE INSTALLED BETWEEN VALVE AND TAPPING SLEEVE.
6. DIELECTRIC INSULATING CORPORATION STOP SHALL BE USED ON ALL TAPS 1–2 INCHES.
7. WELDS SHALL HAVE A MINIMUM OF 2 PASSES.
8. DISTANCE BETWEEN SERVICE MAIN CONNECTIONS SHALL BE MINIMUM 18 INCHES
9. ON BAR WRAPPED CCP, ALL REINFORCING RE–BARS AFFECTED BY THE TAP SHALL BE RECONNECTED TO THE TAPPING SLEEVE BY WELDING TO RESTORE STRUCTURAL INTEGRITY OF PIPE. PIPE MORTAR AFFECTED BY THE TAP SHALL BE RESTORED.

WELDED STEEL MAINS

CEMENT MORTAR COATED (MAY BE POLYWRAPPED)

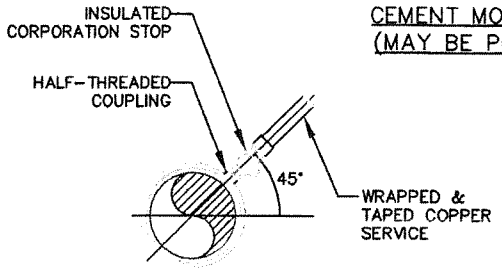

BITUMINOUS OR PLASTIC COATED

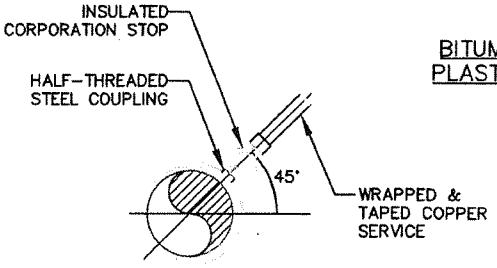

1" – 2" CONNECTIONS

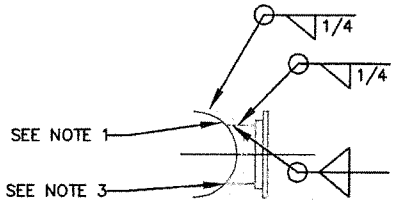

SADDLE NOZZLE INSTALLATION UNDER PRESSURE (WET TAP)

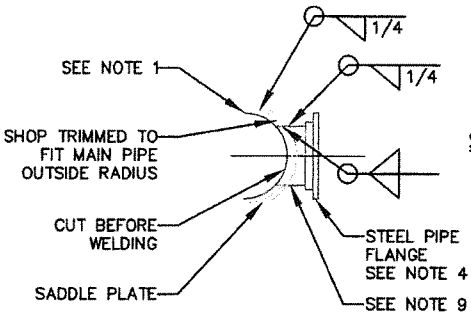

SADDLE NOZZLE

4" – 12" CONNECTIONS

MAIN CONNECTION DETAILS

APPROVED BY:

DATE : DEC 2014	DWG.	31B
REVISED : –		

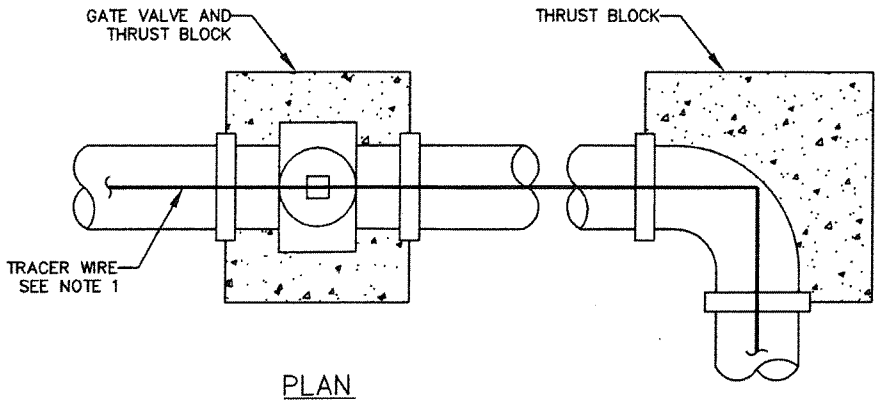

PLAN

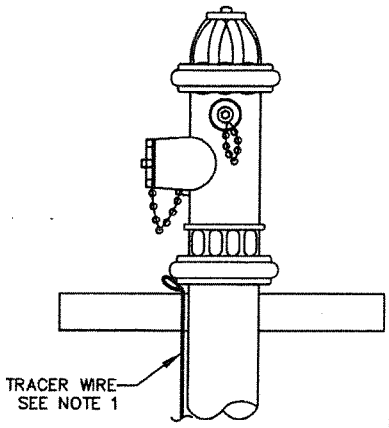

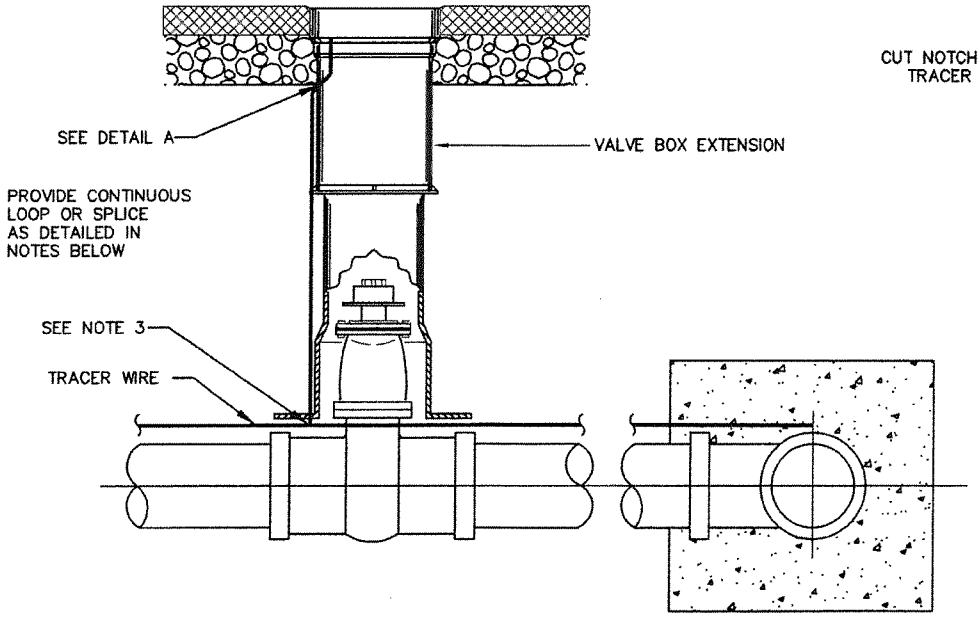

PROFILE

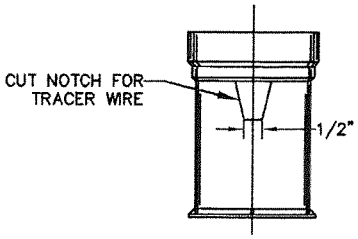

DETAIL A

NOTES:

1. CONTRACTOR SHALL USE CARE TO PREVENT DAMAGE TO TRACER WIRE WHEN PLACING CONCRETE.
2. ALL WIRE SHALL BE COPPER, TYPE THHN WIRE SIZE A.W.G. #10 BLUE INSULATED AND SUITABLE FOR DIRECT BURIAL.
3. SPLICES SHALL BE MADE WITH TWO COPPER OR BRASS SPLIT BOLT FASTENER WITHOUT ENCAPSULATION IN EPOXY.
4. TRACER WIRES SHALL BE INTER-CONNECTED AT PIPE TEES, CROSSES, AND VALVES.
5. CONTINUITY TESTS SHALL BE CONDUCTED TO THE SATISFACTION OF AND WITNESSED BY THE CITY ENGINEER.
6. TRACER WIRE IS REQUIRED ON ALL NON-METALLIC MAIN LINE PIPE AND HYDRANT RUNS.
7. FASTEN TRACER WIRE TO TOP OF PIPE WITH PLASTIC TAPE APPROXIMATELY EVERY 50 FEET.

TRACER WIRE INSTALLATION	APPROVED BY:	
	DATE : DEC 2014 **REVISED : –**	DWG. **32B**