4 March 2013

Revised Technical Memorandum

To: Curtis Lam, HydroScience Engineers, Inc.

From: Julia Lund and Jill Chamberlain

Reviewed By: Mike Joyce, Craig Lichty, and Luke Werner

Subject: City of Sunnyvale
TM #2 – Recycled Water System Master Plan Treatment Alternatives Evaluation
K/J 1288012*00

1.0 Introduction

1.1 Background

Since 1998, the City of Sunnyvale (City) has produced recycled water at its water pollution control plant (WPCP). Due to operational issues, the WPCP runs in two alternating modes, as described below.

Mode 1 – Secondary Effluent Discharge: The entire advanced secondary treated municipal effluent is discharged to the San Francisco Bay (Bay), and no recycled water is produced. The secondary capacity of the WPCP is approximately 16 mgd. Due to less stringent regulatory limits for turbidity compared to recycled water use, less polymer and chlorine are required during the treatment process when effluent is discharged to the Bay. As a result, the WPCP realizes lower operating costs. However, the recycled water system is reliant upon stored recycled water, and the system frequently is supplied with potable water when recycled water is not available.

Mode 2 – Recycled Water Batch Production: The entire WPCP flow is treated to meet Title 22 of the California Code of Regulations for disinfected tertiary recycled water, which is a higher level than under Mode 1. The produced recycled water is stored for subsequent distribution to the City customers primarily for irrigation use. Approximately 1,000 acre-feet per year (AFY) of recycled water is produced under this mode, and the City has several operational concerns associated with this batch mode recycled water production, including:

- Operational complexity and labor required to switch modes
- Limited recycled water storage capacity, which requires batch production frequently during the summer irrigation season
- Excess chlorination used during the transition from Mode 2 to Mode 1 raises concerns of potential negative effluent bioassay impacts

 © Kennedy/Jenks Consultants, Inc.

Additionally, total dissolved solids (TDS) and color are two water quality issues that are of concern to the City and its recycled water customers. The current concentration of TDS in the recycled water is higher than desired, and there is a green tint to the water that is aesthetically undesirable. These two water quality issues are not caused by the batch production mode specifically but are a result of the influent quality and treatment process currently in place at the WPCP.

The WPCP treatment process includes influent grinders, pre-aeration/grit removal, primary sedimentation, oxidation ponds, fixed growth reactor nitrification, dissolved air flotation (DAF) with coagulation aided by polymer dosage, dual media filtration (DMF), chlorination and dechlorination (EOA, 2012). The recycled water and secondary effluent production modes use the same treatment process but have different operational parameters, such as chemical dosage and disinfection level. The WPCP process flow schematic is shown in Figure 1and the site layout is shown in Figure 2.

1.2 Purpose of Technical Memorandum (TM #2)

The primary objective of this TM is to develop a plan to continuously produce recycled water that will meet the near-term recycled water demand of City customers. Desired co-benefits of a recycled water project include TDS and color reduction. The demand and water quality objectives are discussed further in Section 2.

TM #2 evaluates four treatment alternatives to modify recycled water production at the WPCP to address the City's production reliability, capacity, water quality, operations and maintenance (O&M), and regulatory compliance needs.

The TM is organized into the following sections including:

- **Section 1:** Introduces the WPCP and its current operational issues, and describes the purpose of this TM.
- **Section 2:** Describes recycled water demand and water quality objectives.
- **Section 3:** Develops alternatives evaluation criteria, and presents four potential alternatives.
- **Section 4:** Further evaluates alternatives based on preliminary feedback from City staff and considers the nexus of a recycled water project with proposed secondary treatment upgrades.
- **Section 5:** Summarizes findings of TM, and provides recommendations.
- **Appendices A, B and C:** Provide calculations and cost estimates to support the alternatives developed.

 © Kennedy/Jenks Consultants, Inc.

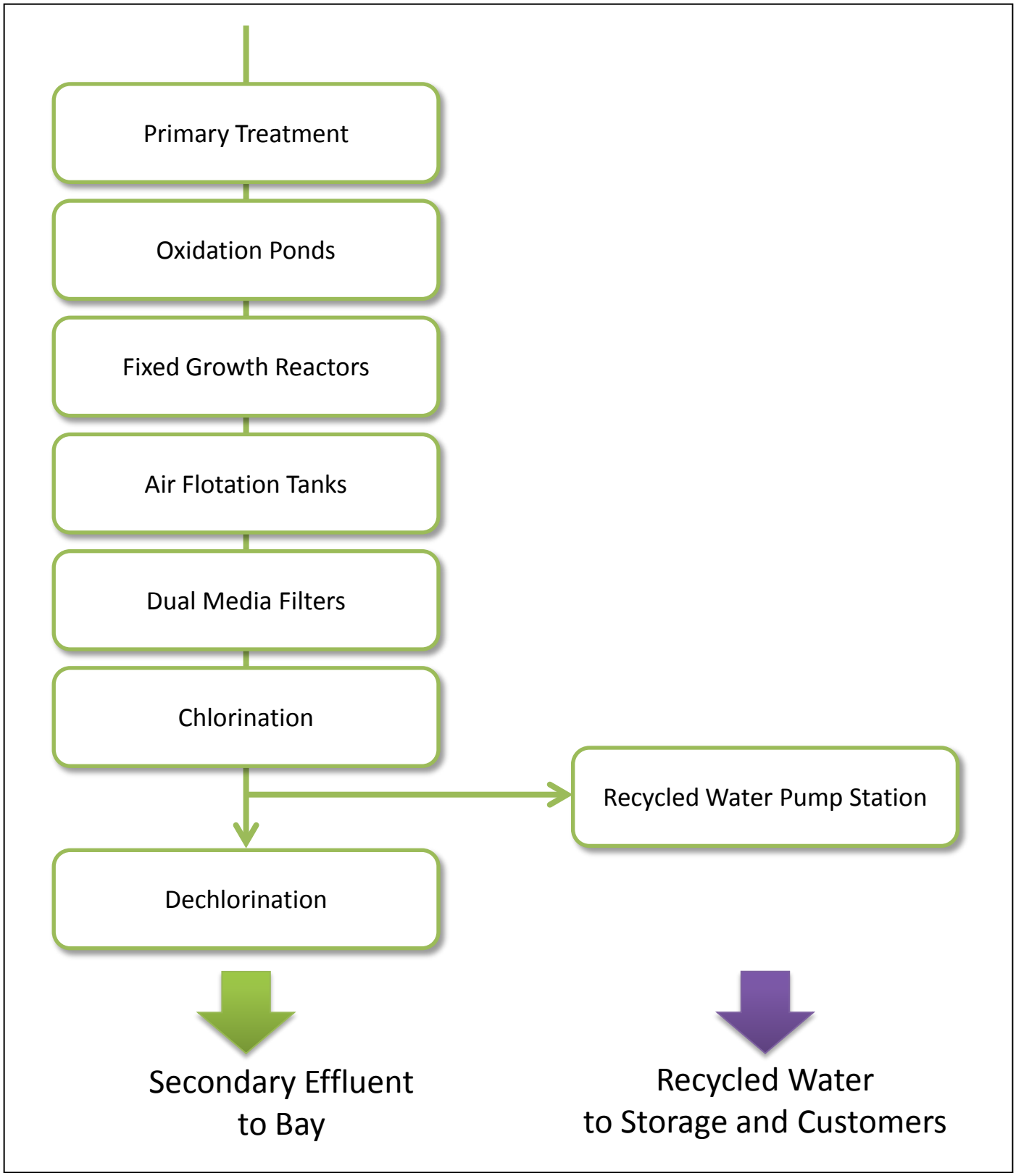

Kennedy/Jenks Consultants

City of Sunnyvale Recycled Water Master Plan
Treatment Alternatives Evaluation

WPCP Process Flow Schematic

K/J 1288012*00
February 2013

Figure 1

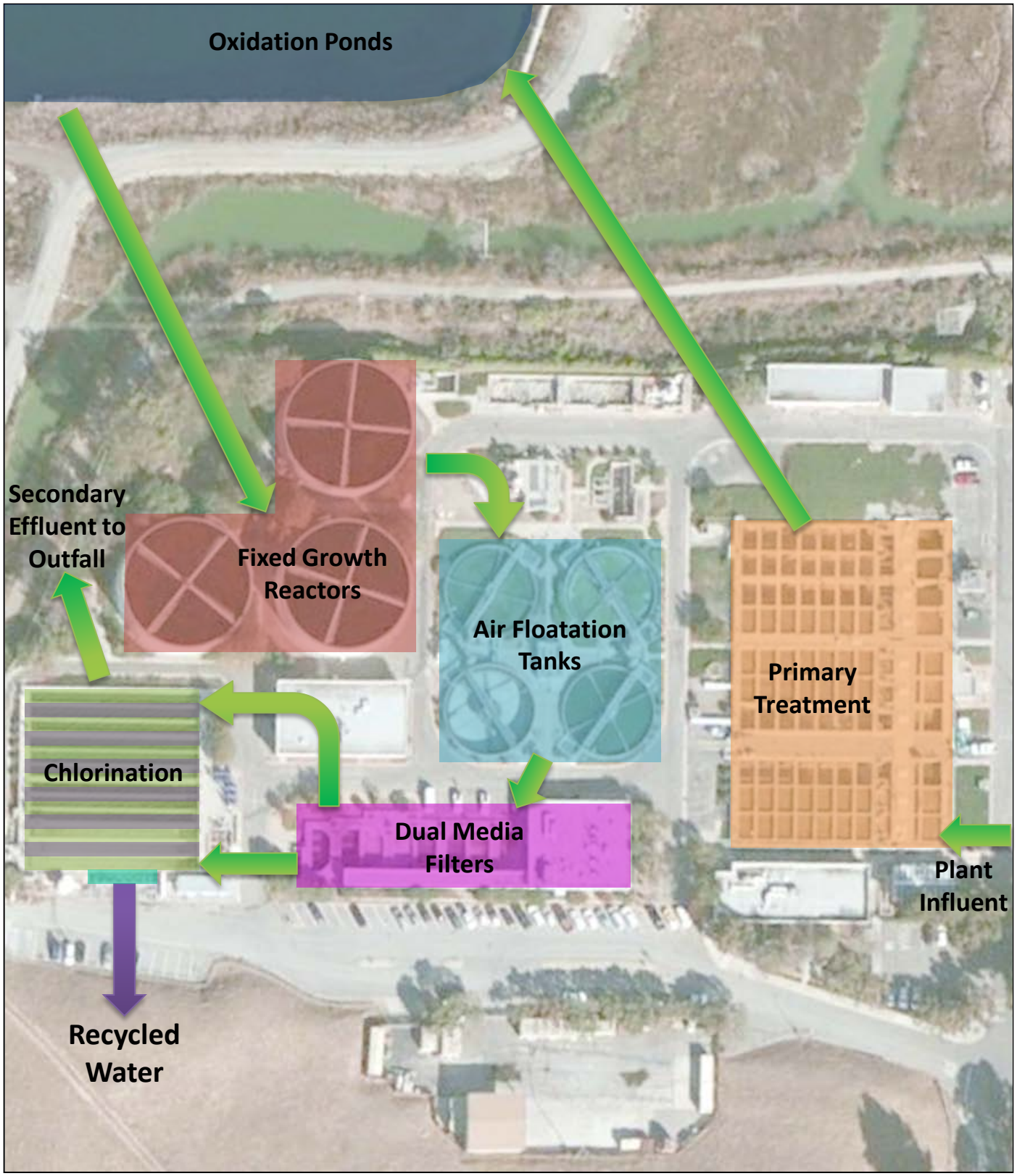

LEGEND

- DIRECTION OF FLOW
- PRIMARY TREATMENT
- OXIDATION PONDS
- FIXED GROWTH REACTORS
- AIR FLOATATION TANKS
- DUAL MEDIA FILTERS
- SECONDARY/RECYLCED CHLORINATION (BATCH OPERATION)
- RECYCLED WATER PUMP

N

0 50 100

Scale: Feet

Kennedy/Jenks Consultants

City of Sunnyvale Recycled Water Master Plan
Treatment Alternatives Evaluation

WPCP Site Layout

K/J 1288012*00
February 2013

Figure 2

2.0 Recycled Water Objectives

2.1 Recycled Water Quantity

The City currently has a demand of approximately 1,060 AFY of recycled water, with an average day demand of 0.95 mgd. Based on the TM #1 Recycled Water Market Assessment (HydroScience, 2012) completed as part of the 2012 City of Sunnyvale Recycled Water System Master Plan effort, the near-term demand is estimated to increase to approximately 3,200 AFY, with a targeted average day treatment demand of 3.6 mgd. The existing and future recycled water demands are summarized in Table 1.

Table 1: Existing and Target Water Quantity[1]

	Existing Recycled Water Demand	Near-Term Demand
Average Annual Production (AFY)	1,060	3,120
Average Day Demand (mgd)	0.95	3.6

Notes: [1]Source: TM #1 – Recycled Water Market Assessment (HydroScience, 2012)

The alternatives proposed in this TM were developed with the objective to meet the near-term demand. Based on initial discussion with the City, the recycled water technologies have been sized to meet average day demand (2,400 AFY), and potable water would be used to supplement the recycled water supply on peak days during which the demand cannot be met by storage alone (720 AFY).

As previously described, another objective is to produce the increased volume of recycled water continuously, rather than through a batch process.

2.2 Recycled Water Quality

Between 2007 and 2011, the average recycled water TDS concentration was approximately 930 mg/L, with a maximum of close to 1,000 mg/L (EOA, 2012). The average recycled water TDS is significantly higher than the WPCP influent, which averaged 760 mg/L in 2010 and 2011. The City has indicated that the oxidation ponds experience a high evaporation rate, particularly during the summer irrigation months, that causes this increase in the TDS concentration through the WPCP. The City's goal is to reduce the recycled water TDS concentration to be consistently closer to the WPCP influent TDS of 760 mg/L to meet the water quality objectives for City customers.

 © Kennedy/Jenks Consultants, Inc.

The City plans to upgrade their secondary processes as part of a Strategic Infrastructure Plan (SIP) in approximately 10 years, or approximately 5 years after recycled water projects are implemented. This will likely change the secondary processes at the WPCP and could decrease the secondary TDS concentration to be closer to 760 mg/L. Therefore, the evaluation of alternatives considers how the future need for TDS reduction technologies, such as reverse osmosis (RO), could change.

In addition to TDS, the City has seen increased levels of greenish color in the effluent that likely results from a small amount of algae remaining in the oxidation pond effluent. The DAF and filtration treatment processes are able to remove most of the algae from the pond effluent, but a small amount of algae remains. Although increasing the polymer dosage to a level above what is required to meet regulatory requirements may aid in the additional removal of algae, the additional chemical usage would increase operational costs.

The existing recycled water quality and future objectives are summarized in Table 2. The proposed alternatives were developed with the intention to meet these water quality objectives.

Table 2: Existing and Target Water Quality

Constituent	Units	Existing Recycled Water Quality[1]		Water Quality Objectives (Average)
		Average (2011)	Max (2011)	
TDS	mg/L	930 mg/L	1,100	760
Color	--	Green		No visible color

Notes: [1]Source: EOA, 2012. Average salinity in April through October, 2009 and 2010.

The City may pursue infiltration and inflow (I & I) projects that could reduce the TDS of the WPCP influent, but the alternatives evaluation does not consider this in the overall evaluation. Instead, this would be a realized benefit when the projects are implemented, and the TDS of recycled water would be further reduced.

The City currently is experiencing higher than normal concentrations of ammonia in their secondary effluent. Although the presence of ammonia should not be a concern for recycled water, the ability of technologies (such as RO) to treat secondary effluent would be a benefit, since this could help to address other WPCP issues. However, RO concentrate would have high ammonia concentrations, which could affect the ammonia concentration in the outfall to the bay. This issue will be further explored in Section 3.2.3.

 © Kennedy/Jenks Consultants, Inc.

3.0 Potential Recycled Water Alternatives

3.1 Evaluation Criteria

Evaluation criteria were developed to provide a basis to compare the alternative treatment technologies that could enhance the production of recycled water at the WPCP and address the quality and quantity objectives. The discussion of each alternative, presented in the following section, will address each criterion. A short description of each criterion is provided in Table 3.

Table 3: Alternative Treatment Technologies Evaluation Criteria

Criterion	Description
Eliminates Batch Operation	Identifies whether or not an alternative would eliminate batch production of recycled water. Alternatives without batch operation are more favorable.
Eliminates Potable Blending	Identifies if an alternative would require blending of recycled water with potable water during non-peak demand days. Additional potable water use conflicts with the purpose of recycled water to provide a reliable, drought-proof source to offset potable water use. Therefore, alternatives requiring blending are considered less favorable.
Degree of Operational Complexity	Identifies if an alternative simplifies current operations or introduces additional technologies that require staff training.
Capital, O&M and Lifecycle Costs	Estimates capital, annual O&M, and 30-year lifecycle costs for each alternative. These costs represent planning-level costs (Class 5 per standard AACE cost estimating guidelines) with an estimated range of -30 to +50 percent. O&M costs include energy, chemicals, and potable water. Potable water is assumed to be purchased from SCVWD starting at $625/AFY in 2013 and escalating over time, as described in Appendix C. These costs do not include potable water purchased to meet peak day demands. Lifecycle costs are calculated at net present value (NPV) and assume a 30-year life, 6% loan/bond rate, 13% loan/bond issuance cost, 2.5% inflation, and 3.1% real discount rate. Detailed lifecycle cost analyses are included in Appendix C.
Building/Equipment Footprint	Estimates the building and/or equipment footprint for each alternative.
Other	Identifies any additional benefits or concerns about an alternative, such as removal of ammonia or potential future regulatory issues.

 © Kennedy/Jenks Consultants, Inc.

3.2 Alternatives

The following alternatives were identified for evaluation:

- **Alternative 1 – Blending with Potable Water:** Blend recycled water with potable water to increase volume and reduce TDS.

- **Alternative 2 – Microfiltration/Ultrafiltration (MF/UF):** Treat a sidestream of WPCP secondary effluent with MF to eliminate batch recycled water production.

- **Alternative 3 – Microfiltration/Reverse Osmosis (MF/RO):** Treat a sidestream of WPCP secondary effluent with MF and RO to eliminate batch recycled water production and to reduce TDS.

- **Alternative 4 – Membrane Bioreactor (MBR):** Treat a sidestream of WPCP primary effluent with MBR to eliminate batch recycled water production, avoid TDS increase through secondary processes at WPCP. An option to add RO after the MBR system would reduce TDS.

Each alternative is described below and is evaluated using the above criteria. As previously described, the recycled water technologies have been sized to meet average day demand, and potable water would be used to supplement the recycled water supply on peak days during which the demand cannot be met by storage alone.

3.2.1 Alternative 1 – Blending with Potable Water

Alternative 1 would consist of blending recycled water effluent with potable water to increase the quantity and reduce the TDS concentration. The WPCP recycled water system design allows for potable water addition after disinfection and after the recycled water flows out of the Chlorine Contact Tanks (CCTs). Potable water is added at an effluent box at the end of the CCT effluent channel. Since CCTs #1 and #2 currently are equipped to allow for blending of WPCP effluent with potable water prior to distribution, this alternative would not require any WPCP modifications.

This alternative would not allow the City to eliminate batch production of recycled water. With increased recycled water production required to meet the near-term demand, the WPCP would need to either operate in the mode of producing recycled water with greater frequency or increase the percentage of potable water that is used in the recycled water distribution system. Assuming that the recycled water production level could be increased to approximately 2,485 AFY, the quantity of potable water required would be 635 AFY (plus the additional 720 AFY to

 © Kennedy/Jenks Consultants, Inc.

meet peak day demand). The blend would consist of approximately 80 percent recycled water and 20 percent potable water and would meet the near-term recycled water demand.

The City receives potable water from the Santa Clara Valley Water District (SCVWD), the San Francisco Public Utilities Commission (SFPUC) and local groundwater wells. In 2010, the City's potable water supply from SFPUC had an average TDS concentration of 95 mg/L (City, 2010), while its supply from the SCVWD had an average TDS concentration of 305 mg/L (City, 2010). For planning purposes, this report assumes a SFPUC TDS concentration of 95 mg/L but SCVWD potable water rates. Assuming a consistent blend of potable water and recycled water, the resulting recycled water quality would exceed the TDS goal.

The demand and TDS characteristics of the various flow streams for this alternative are presented in Table 4, and the flow schematic is illustrated in Figure 3.

Table 4: Alternative 1 Flow Stream Characteristics

Parameter	Alternative 1 – Blending Meets Demand and TDS Objectives		
	Recycled Water	Potable Water	Total Recycled Water[1]
Average Annual Demand (AFY)	2,485	635	3,120
Average Day Flow (mgd)	2.9	0.7	3.6
Average TDS (mg/L)	930	95	760

Notes: [1]The TDS concentration of blended flow streams in various alternatives has been calculated as follows:
For Q = Flowrate and C = TDS Concentration, $(Q_{RW} \bullet C_{RW} + Q_{Potable} \bullet C_{Potable}) / Q_{Blend} = C_{Blend}$
For Alternative 1: (1,000 AFY • 930 mg/L + 2,200 AFY • 305 mg/L) / 3,200 AFY = 500 mg/L TDS

A relatively simple solution that could be implemented quickly, Alternative 1 would meet the objectives to increase recycled water production capacity but would not eliminate batch operation. Additionally, using more potable water to supplement recycled water would limit the availability of potable water for other uses.

Assuming that the purchase of additional potable water from the SCVWD would start at $625 per AFY in 2013 and escalate as shown in the 2010 UWMP (HydroScience, 2011), the NPV lifecycle cost of Alternative 1 is estimated to be $43 million. Compared to the other capital project alternatives, this cost is completely reliant on varying potable water costs and is unpredictable, which could be a challenge for long-term budgeting. The evaluation criteria for Alternative 1 are summarized in Table 5.

 © Kennedy/Jenks Consultants, Inc.

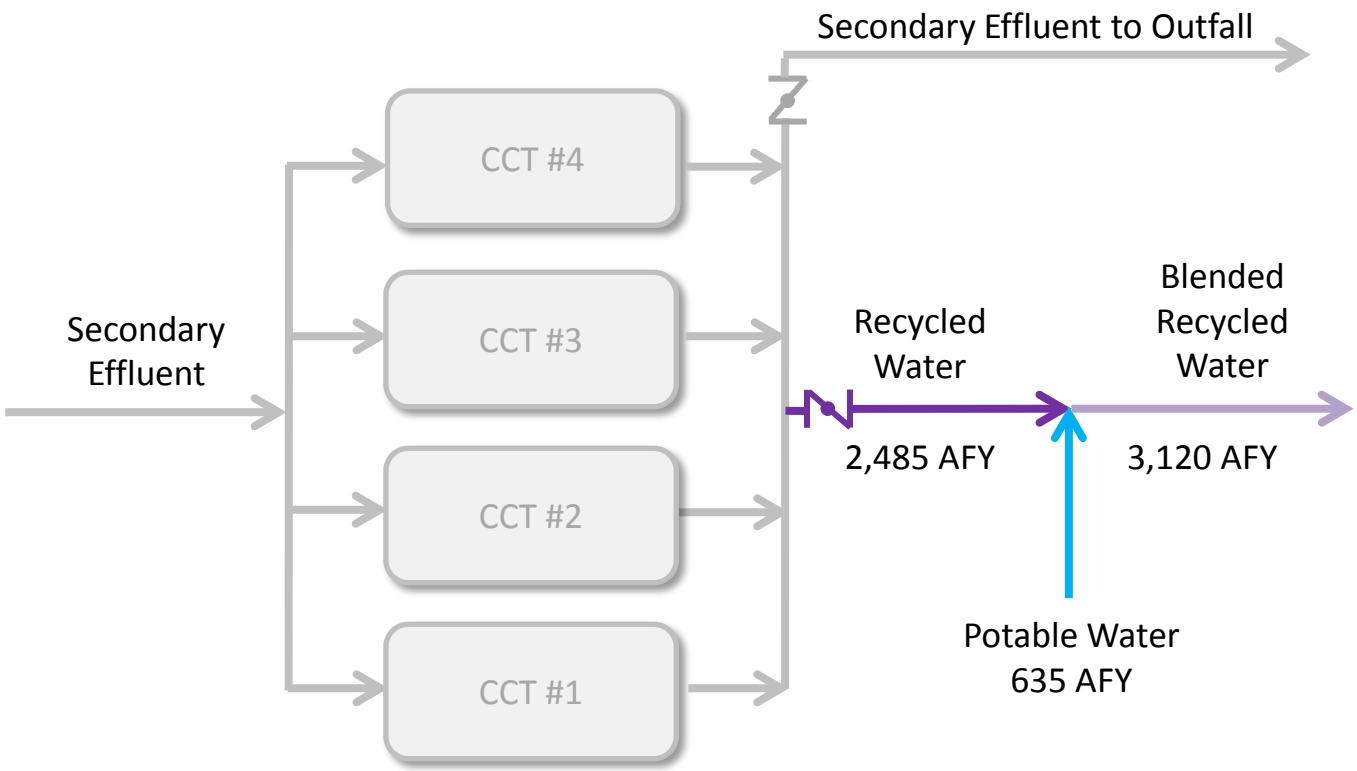

Kennedy/Jenks Consultants

City of Sunnyvale Recycled Water Master Plan
Treatment Alternatives Evaluation

Alternative 1 Flow Schematic

K/J 1288012*00
February 2013

Figure 3

Table 5: Summary of Alternative 1 Evaluation Criteria

Evaluation Criterion	Alternative 1 – Blending
Eliminates Batch Operation	No
Eliminates Potable Blending	No
Operational Complexity	Low. Although blending itself is not operationally complex, this alternative would not reduce the current operational complexity of switching between recycled water and secondary effluent operational scenarios.
Capital Cost (NPV $ million)	None
Average Annual O&M Cost ($/year over 30 years)	$2.4 million/year. This cost is in addition to existing operational costs resulting from batch operation.
Lifecycle Cost (NPV $ million)	$43 million
Unit Cost (NPV $/AF of recycled water produced)	$430
Building/Equipment Footprint	None
Other	Blending recycled water with potable water does not benefit anticipated future regulatory compliance requirements for constituents of emerging concern (CECs). Long-term potable water use for blending may conflict with long-term water conservation objectives.

This alternative provides phasing options which allow the City to meet recycled water demands for the next few years until a recycled water capital project is implemented or for the next ten years until the SIP is implemented. The NPV lifecycle costs of these phasing options are $1.7 million and $12 million, respectively.

3.2.2 Alternative 2 – Microfiltration/Ultrafiltration (MF/UF)

Alternative 2 would consist of installing a MF or UF unit to treat a sidestream of the WPCP flow. A portion of the secondary effluent would be diverted from the CCT influent channel, treated by the MF system, and returned to the head of CCTs #1 and #2 for disinfection. The remainder of the WPCP flow would be treated to a secondary standard and then disinfected in CCTs #3 and #4 and discharged to the Bay. For the MF/UF influent, it is preferable to use the DMF effluent

 © Kennedy/Jenks Consultants, Inc.

over the pond effluent to reduce the fouling potential on the MF, which can result in the need for more MF trains and increased backwash and cleaning rates.

MF is a membrane-based low-pressure separation process that typically employs hollow fiber membranes to provide a barrier to the passage of solids (such as turbidity and suspended solids) and microorganisms (such as bacteria, pathogens and some viruses). MF pore sizes range from approximately 0.1 to 0.2 micron (nominally 0.1 micron), while UF pore sizes range from 0.01 to 0.05 micron (nominally 0.01 micron). MF/UF does not significantly reduce TDS.

A MF system would eliminate the need for batch production and allow for continuous production of the recycled water. Alternative 2 would divert to the MF system only the portion of the WPCP flow necessary to meet customer demand, allowing continuous operation of the recycled water system. A MF system also would remove algae that remains after DAF and filtration and therefore would reduce both the color and the amount of polymer currently required for recycled water production. However, since the MF system would not reduce TDS, this alternative would need to be combined with blending if further TDS reduction is desired.

This alternative could be implemented in two phases to address varying secondary TDS concentrations. Phase 1, which would occur before the SIP is implemented, would include MF treatment and potable water blending. The blend would consist of approximately 80 percent recycled water and 20 percent potable water and would meet the near-term recycled water demand. Phase 2 assumes the SIP has been implemented and the recycled water system no longer has to include TDS reduction, since other WPCP improvements should result in a decrease in secondary effluent TDS. Therefore, the MF system could be expanded to meet a capacity of 3,200 AFY to produce the desired amount of recycled water, and potable water would only be used to meet peak demands and as an emergency backup.

The demand and TDS characteristics of the various flow streams for the two phases of this alternative are presented in Table 6, and a schematic of these two scenarios is shown in Figure 4.

 © Kennedy/Jenks Consultants, Inc.

Table 6: Alternative 2 Flow Stream Characteristics and Equipment Sizing

Parameter	Phase 1 – MF + Blending			Phase 2 – Expansion of MF, No Blending
	MF Product Water	Potable Water	Total Recycled Water	MF Product Water
Average Annual Demand (AFY)	2,485	635	3,120	3,120
Average Day Flow (mgd)	2.9	0.7	3.6	3.6
Average TDS (mg/L)	930	95	760	760[1]
MF Design Capacity (mgd)	2.9			3.6

Notes: [1]After SIP is implemented.

As shown in Table 6, the MF unit would initially be sized to have a capacity of approximately 2.9 mgd. The remainder of the demand would be met by potable water blending at a ratio that reduces the TDS to 760 mg/L. Once the SIP is implemented and the secondary effluent TDS drops, the MF system could be expanded to 3.6 mgd, while blending would be eliminated.

At a planning level, this alternative is estimated to have a capital cost of approximately $10 million, an average annual O&M cost of $3 million per year, and a NPV lifecycle cost of $70 million. The unit cost would be $740 per AF of recycled water produced.

The footprint of a MF system enclosed in a building or canopy would be approximately 12,000 square feet for this alternative. This is greater than the amount of space that may be available at the administration building and may have to be sited at the former sludge lagoons.

The evaluation criteria for Alternative 2 are summarized in Table 7.

 © Kennedy/Jenks Consultants, Inc.

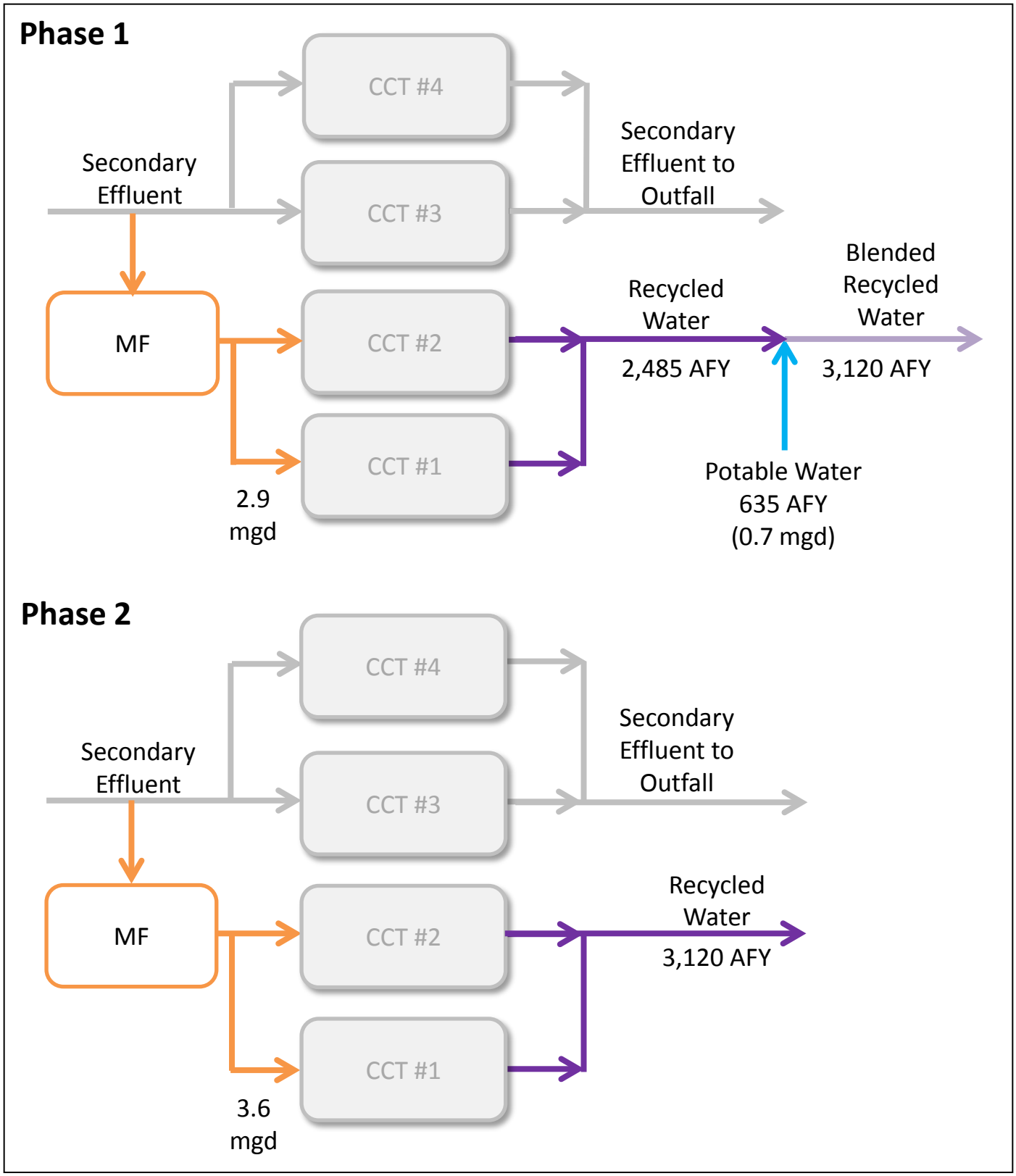

Kennedy/Jenks Consultants

City of Sunnyvale Recycled Water Master Plan
Treatment Alternatives Evaluation

Alternative 2 Flow Schematics

K/J 1288012*00
February 2013

Figure 4

Table 7: Summary of Alternative 2 Evaluation Criteria

Evaluation Criterion	Alternative 2 – MF (+ Blending until SIP implementation)
Eliminates Batch Operation	Yes
Eliminates Potable Blending	No
Operational Complexity	Moderate. Eliminates complexity of batch operation but introduces MF technology.
Capital Cost (NPV $ million)	$10 million
Average Annual O&M Cost ($/year over 30 years)	$3 million/year
Lifecycle Cost (NPV $ million)	$70 million
Unit Cost ($/AF of recycled water produced)	$740
Building/Equipment Footprint	12,000 square feet
Other	There could be future regulatory concerns regarding CECs since MF does not remove these constituents.

3.2.3 Alternative 3 – Microfiltration + Reverse Osmosis (RO)

Alternative 3 would consist of installing a MF/UF system (referred to as MF in this section) followed by a RO system to treat a sidestream of the WPCP flow. A portion of the secondary effluent would be diverted from the CCT influent channel, treated by the MF/RO system, and returned to the head of CCTs #1 and #2 for disinfection and discharge to the RW distribution system. The remainder of the WPCP flow would be treated to a secondary standard and then disinfected in CCTs #3 and #4 and discharged to the Bay.

As described in Alternative 2, MF is a low-pressure membrane that removes solids and microorganisms. RO is a high-pressure membrane separation process where dissolved compounds (such as TDS or dissolved organic material) are separated from the solution. RO also removes the majority of CECs, including endocrine disrupting compounds, pharmaceutically active compounds, and personal care products. RO produces a very low TDS product stream (permeate) and a concentrate stream.

The MF/RO system would eliminate the need for batch production and allow for continuous production of the recycled water via sidestream treatment. Alternative 3 would divert to the MF/RO system only the portion of the WPCP flow necessary to meet customer demand, allowing continuous operation of the recycled water system. A MF/RO system also would remove algae that remains after DAF and filtration and therefore would reduce both the color

 © Kennedy/Jenks Consultants, Inc.

and the amount of polymer currently required for recycled water production. The main purpose of adding a RO system after MF would be to reduce TDS; therefore, blending with potable water to meet TDS objectives would not be necessary. The RO concentrate would be blended with WPCP secondary effluent and discharged to the outfall.

A schematic of this alternative and the equipment sizing, as discussed below, are illustrated in Figure 5. The demand and TDS characteristics of the various flow streams for this alternative are presented in Table 8.

Table 8: Alternative 3 Water Quality and Quantity Impacts

Parameter	Alternative 3 – MF/RO		
	MF Product Water	RO Product Water	Total Recycled Water
Average Annual Demand (AFY)	2,390	730	3,120
Average Day Flow (mgd)	2.8	0.8	3.6
Average TDS (mg/L)	930	190	760
MF Design Capacity (mgd)	3.8		
RO Design Capacity (mgd)	0.8		

The MF/RO system would be sized to meet the near-term average day demand of 3.6 mgd and to meet the TDS water quality objective of 760 mg/L. As shown in Figure 5, the MF system would be sized to produce 3.8 mgd of filtrate. To achieve TDS objectives, 1.0 mgd of the filtrate would be sent to the RO for further treatment, while 2.8 mgd would bypass RO treatment to be blended with the RO permeate before disinfection. Assuming 80% efficiency, the RO would produce 0.8 mgd low-TDS permeate to be blended with the bypass water, as well as 0.2 mgd of RO concentrate that would be sent to the bay outfall.

At a planning level, this MF/RO system is estimated to have a NPV capital cost of approximately $13 million, an average annual O&M cost of $2 million per year, and a NPV lifecycle cost of $57 million. The unit cost would be $610 per AF of recycled water produced. The footprint of a MF/RO system enclosed in a building or canopy is expected to be approximately 18,000 square feet.

The evaluation criteria for Alternative 2 are summarized in Table 9.

 © Kennedy/Jenks Consultants, Inc.

Flow Schematic

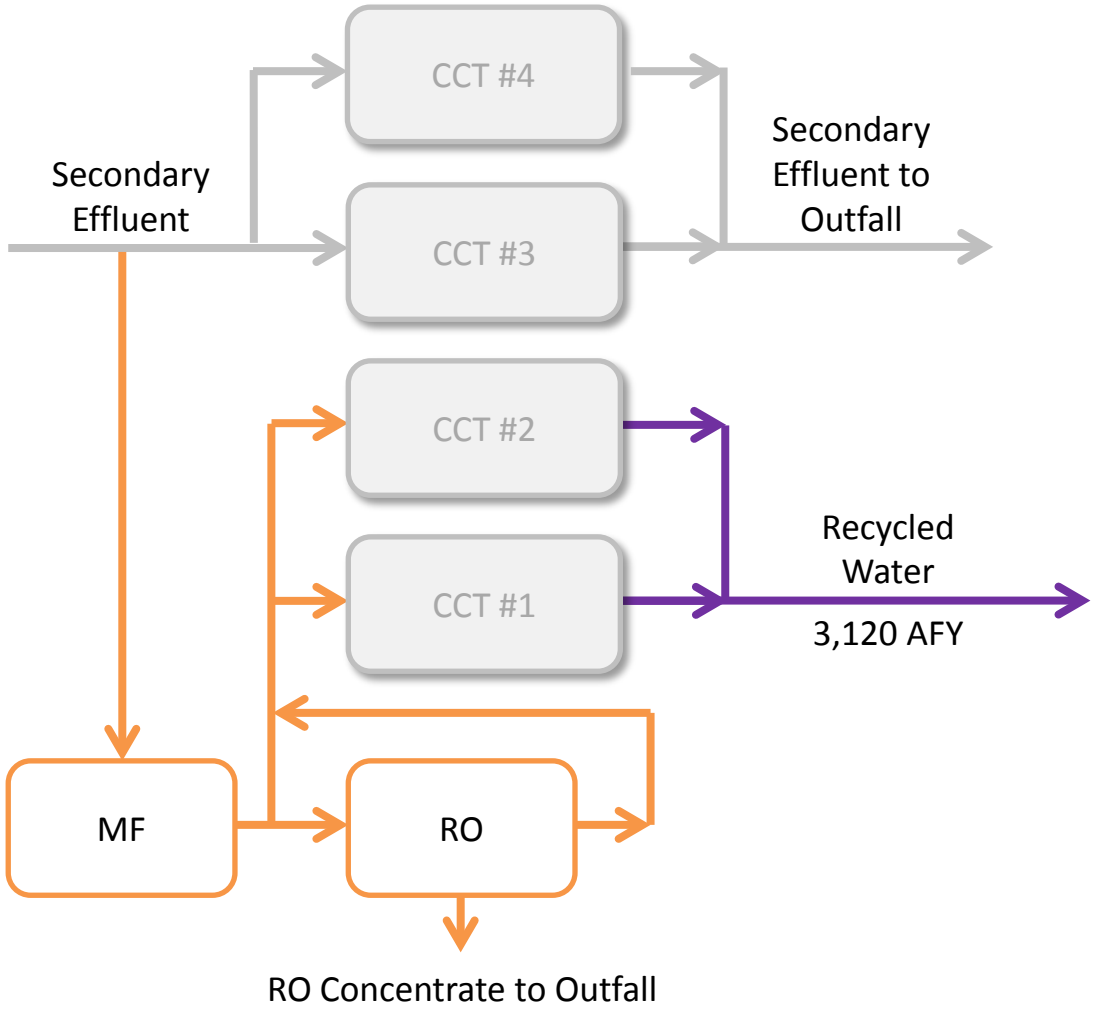

Peak Flows for Equipment Sizing

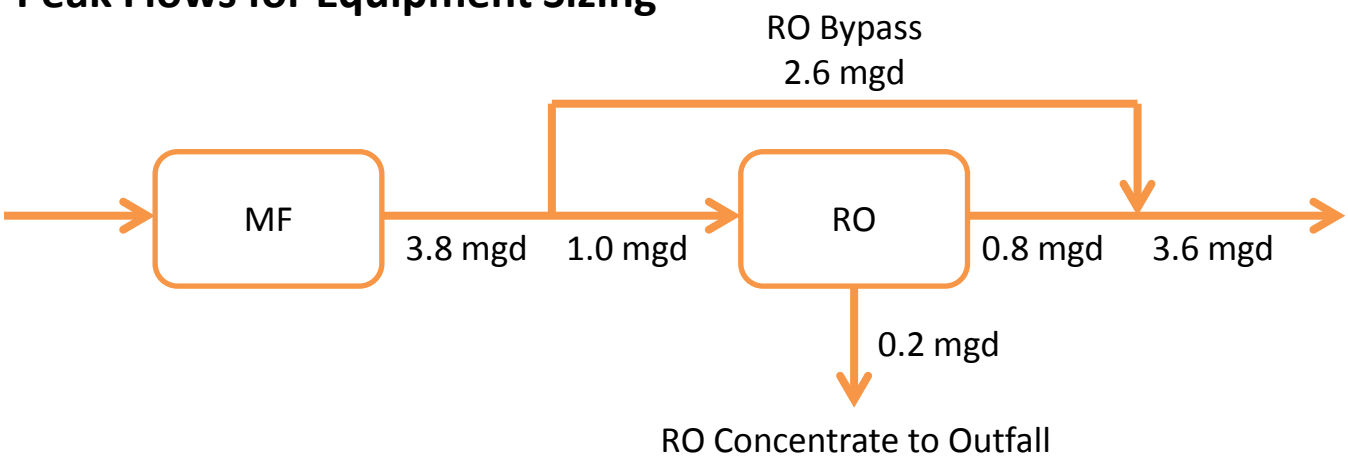

Kennedy/Jenks Consultants

City of Sunnyvale Recycled Water Master Plan
Treatment Alternatives Evaluation

Alternative 3 Flow Schematics

K/J 1288012*00
February 2013

Figure 5

The use of RO provides the benefit of removing approximately 80 to 90 percent of ammonia. However, a concern is that the ammonia removed from the recycled water would be concentrated in the plant effluent, which could impact NPDES compliance. Ammonia concentrations ranged between 0.1 to 4.5 mg/L from January through May 2011, and between 0.3 to 1 mg/L from June through September 2011. The City's NPDES permit has an average monthly limit for ammonia of 18 mg/L as nitrogen (N) from October through May and 2 mg/L as N from June through September. The maximum daily effluent limit for ammonia is 26 mg/L as N from October through May and 5 mg/L as N from June through September.

Figure 6 shows an ammonia balance to better understand if the increased ammonia in the RO concentrate could affect the bay discharge limit. Assuming an ammonia concentration of 1 mg/L in the secondary effluent (the maximum concentration seen in the summer months of 2011), the addition of a RO concentrate stream would increase the ammonia concentration to approximately 1.1 mg/L (rounded), which is lower than the average monthly limit of 2 mg/L.

Figure 6: Effect of RO Concentrate on Ammonia on Effluent[1,2]

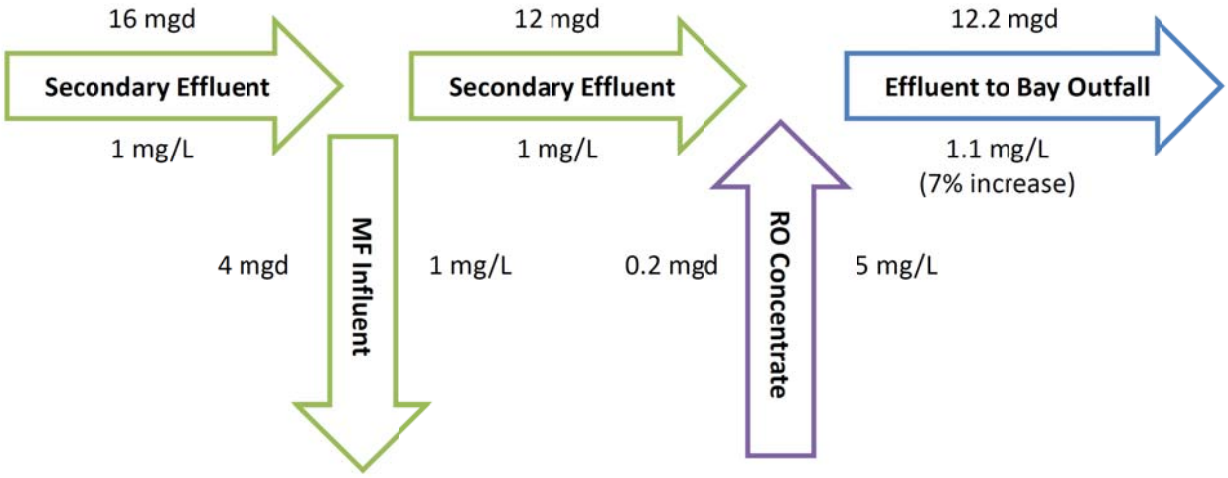

Notes: [1] Assumes MF efficiency of 95%, requiring an MF influent of 4 mgd to produce 3.8 mgd MF filtrate. Assumes 1 mgd of RO treatment, resulting in 0.8 mgd of RO permeate and 0.2 mgd of RO concentrate.
[2] Numbers are rounded.

 © Kennedy/Jenks Consultants, Inc.

Table 9: Summary of Alternative 3 Evaluation Criteria

Evaluation Criterion	Alternative 3 – MF / RO
Eliminates Batch Operation	Yes
Eliminates Potable Blending	Yes
Operational Complexity	Moderately high. Eliminates complexity of batch operation but introduces MF and RO technologies.
Capital Cost (NPV $ million)	$13 million
Average Annual O&M Cost ($/year over 30 years)	$2 million/year
Lifecycle Cost (NPV $ million)	$57 million
Unit Cost ($/AF of recycled water produced)	$610
Building/Equipment Footprint	18,000 square feet
Other	Concentrated ammonia in RO concentrate should not NPDES compliance for ammonia

3.2.4 Alternative 4 – Membrane Bioreactor (MBR)

Alternative 4 would consist of installing a MBR system to treat a sidestream of the WPCP flow. After initial degritting and primary sedimentation, a portion of the WPCP flow would be diverted to the MBR system, treated to a tertiary effluent quality, and then sent to the head of CCTs #1 and #2 for disinfection. The remainder of the WPCP flow would be treated to a secondary standard and then disinfected in CCTs #3 and #4 and discharged to the Bay.

A MBR system combines activated sludge biological treatment with an integrated membrane system to provide both secondary treatment and filtration. A MBR system includes MF or UF membranes for solids/liquid separation, eliminating the need for separate secondary clarifiers and tertiary filtration to achieve a low turbidity effluent. MBR systems do not remove salts and therefore must be followed by advanced treatment or potable blending for TDS removal, if desired.

A MBR system would eliminate the need for batch production and allow for continuous production via the recycled water system. Alternative 4 would divert only the portion of the WPCP flow necessary to meet recycled water demand to the MBR system, allowing for continuous operation of the recycled water system. The MBR system also would reduce the color and TDS of the recycled water since it would bypass the oxidation ponds, which introduce algae and increase TDS in the WPCP flow.

 © Kennedy/Jenks Consultants, Inc.

The MBR system would treat 3,120 AFY to produce the desired amount of recycled water. A schematic of this scenario is presented in Figure 7. The demand and TDS characteristics of the various flow streams are presented in Table 10.

Table 10: Alternative 4 Water Quality and Quantity Impacts

Parameter	Alternative 4 – MBR
Average Annual Demand (AFY)	3,120
Average Day Flow (mgd)	3.6
Average TDS (mg/L)	760
MBR Design Capacity (mgd)	3.6

Notes: [1]The average TDS is less than in Alternatives 1, 2 or 3 because the influent TDS is lower (760 mg/L versus 930 mg/L).

The MBR unit would be sized to meet the near-term average day demand of 3.6 mgd. At a planning level, this alternative is estimated to have a NPV capital cost of approximately $29 million, an average annual O&M cost of $2.1 million per year, and a NPV lifecycle cost of $85 million. The unit cost would be $910 per AF of recycled water produced. The footprint of a MBR system enclosed in a building or canopy is expected to be 47,000 square feet for this alternative. The evaluation criteria for Alternative 4 are summarized in Table 11.

Table 11: Summary of Alternative 4 Evaluation Criteria

Evaluation Criterion	Alternative 4 – MBR
Eliminates Batch Operation	Yes
Eliminates Potable Blending	Yes
Operational Complexity	Moderate. Eliminates complexity of batch operation but introduces MBR technologies.
Capital Cost (NPV $ million)	$29 million
Average Annual O&M Cost ($/year over 30 years)	$2.1 million/year
Lifecycle Cost (NPV $ million)	$85million
Unit Cost ($/AF of recycled water produced)	$910
Building/Equipment Footprint	47,000 square feet
Other	There could be future regulatory concerns regarding CECs since MF does not remove all of these constituents.

 © Kennedy/Jenks Consultants, Inc.

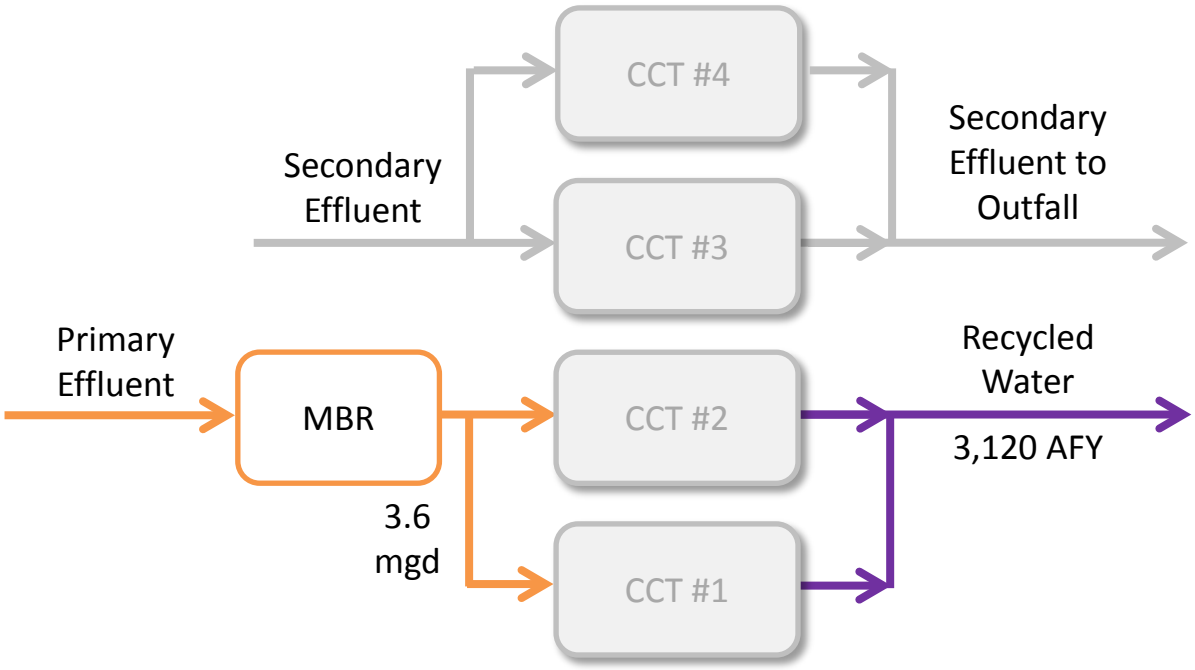

Kennedy/Jenks Consultants

City of Sunnyvale Recycled Water Master Plan
Treatment Alternatives Evaluation

Alternative 4 Flow Schematic

K/J 1288012*00
August 2012

Figure 7

3.3 Summary of Preliminary Evaluation

A preliminary comparison of the alternatives based on the evaluation criteria is shown in Table 12.

Table 12: Summary of Alternatives

Evaluation Criterion	Alt 1 Blend	Alt 2 MF + Blending (Blend until SIP)	Alt 3 MF/RO	Alt 4 MBR
Eliminates Batch Operation		•	•	•
Eliminates Potable Blending			•	•
Operational Complexity	Low	Moderate	Moderate/High	Moderate
Capital Cost (NPV $ million)	No Additional	$10	$13	$29
Average Annual O&M Cost ($ million/year over 30 years)	$2.4	$3.0	$2.0	$2.1
Lifecycle Cost (NPV $ million)	$43	$70	$57	$85
Unit Cost (NPV $/AF of recycled water produced)	$430	$740	$610	$910
Building/Equipment Footprint (square feet)	None	12,000	18,000	47,000
Other	[1,2]	[1]	[3]	

Notes: [1]There may be potential future regulatory concerns regarding CECs.
[2]Long-term potable water use for blending may conflict with long-term water conservation objectives.
[3]Concentrated ammonia in RO concentrate should not affect ammonia concentration in secondary effluent to outfall.

4.0 Additional Evaluation of Alternatives

4.1 Preliminary Input from City

After the initial consideration of alternatives, a workshop was held in September 2012 with the City to further understand long-term goals and preferences and to narrow the focus of the

 © Kennedy/Jenks Consultants, Inc.

evaluation. The staff attending the workshop included planners, engineers, and operators, which provided a variety of viewpoints and preferences.

Discussion of the various alternatives indicated that the City does not want to consider Alternative 1 as a long-term option. The City is interested in considering the remaining alternatives but with a greater focus of how each recycled water alternative fits into the context of the overall SIP improvements and cost. Specifically, the City would like to understand:

- The impact to the overall cost of SIP (considering the various SIP alternatives) by implementing the various recycled water alternatives
- The cost impact of stranded assets

The City also confirmed that it is amenable to the option of having two parallel secondary processes, such as MBR for recycled water and activated sludge or wetlands for secondary treatment only.

4.2 Refined Evaluation based on Expanded Cost Estimate

Based on the City's desire to understand the recycled water alternatives in the greater SIP context, the evaluation was broadened to include consideration of the overall SIP costs developed in previous reports, including:

- Plant Replacement Alternatives Summary, Brown and Caldwell, November 2009
- Peer Review of the Water Pollution Control Plant Strategic Infrastructure Plan (SIP), CH2MHill, June 2011

Three secondary treatment technologies were considered as a part of the SIP: MBR, activated sludge, and wetlands. The potential secondary and recycled water alternatives are interconnected and their benefits are interdependent. For example, selecting MBR as the recycled water alternative would decrease the overall capacity requirements for the SIP, since it provides a benefit and offsets some of the water that has to be treated in the secondary process. The 22.4 mgd secondary treatment requirement for SIP would be reduced to 18.8 mgd, since 3.6 mgd would already be diverted and treated by MBR as part of the recycled water project.

Conversely, selecting MBR as the secondary alternative would drive the long-term recycled water alternative favorability, since MF and/or RO would become stranded assets, as these treatment technologies would not be needed for the production of recycled water.

Table 13 below summarizes the interconnected benefits and provides the total secondary and recycled water flow volumes the treatment systems would be required to produce. The table

 © Kennedy/Jenks Consultants, Inc.

also presents how the recycled water treatment alternative would fit in the overall SIP. The green boxes indicate a beneficial nexus between the two alternatives, and the yellow boxes indicate that part of the recycled water system may become a stranded asset upon implementation of the SIP.

Table 13: Secondary (2nd) and Recycled Water (RW) Treatment Alternative Matrix[1]

		SIP Secondary Treatment Alternative		
		MBR	**Activated Sludge**	**Wetlands**
Recycled Water Alternative	**MF + Blending**	2nd – 22.4 / RW – 3.6 MF becomes a stranded asset.	2nd – 22.4 / RW – 3.6 MF remains for recycled water treatment.	2nd – 22.4 / RW – 3.6 MF remains for recycled water treatment.
	MF + RO[2]	2nd – 22.4 / RW – 3.6 MF and RO become stranded assets.	2nd – 22.4 / RW – 3.6 RO becomes a stranded asset.	2nd – 22.4 / RW – 3.6 RO becomes a stranded asset.
	MBR	2nd – 18.8 / RW – 3.6 Existing MBR integrated into secondary system. Offsets part of the secondary upgrade cost.	2nd – 18.8 / RW – 3.6 Existing MBR run in parallel with new secondary system. Offsets part of the secondary upgrade cost.	2nd – 18.8 / RW – 3.6 Existing MBR run in parallel with new secondary system. Offsets part of the secondary upgrade cost.

Notes: [1] 2nd = secondary treatment. RW = recycled water.
[2] RO could be used with any of these alternatives but is not required to meet the 760 mg/L goal.

The favorability of a project combination likely will be dependent upon the total cost. The lifecycle cost of each alternative was calculated using the recycled water costs developed in Section 3 and the secondary treatment costs provided in the SIP. The secondary treatment costs for the SIP MBR alternative were escalated down from a 22.4 mgd project to an 18.8 mgd project where appropriate.

The cost evaluation is included in Appendix C and summarized in Table 14 below. The green boxes highlight the more cost-effective pairings within each secondary alternative category, and the yellow boxes highlight less cost-effective pairings.

 © Kennedy/Jenks Consultants, Inc.

Table 14: NPV Lifecycle Costs of Secondary and Recycled Water Combinations[1]

		SIP Secondary Treatment Alternative		
		MBR	**Activated Sludge**	**Wetlands[2]**
Recycled Water Alternative	**MF + Blending**	$689 million	$524 million	TBD
	MF + RO	$677 million	$511 million	TBD
	MBR	$640 million	$531 million	TBD

Notes: [1] Cost details and sources are described in Appendix C.
[2] The capital cost for wetlands (B&C, 2009) is currently being reevaluated by the City and may be revised.

As shown in Table 14, the cost effectiveness of a recycled water alternative is dependent upon the secondary treatment selected. If MBR is selected for secondary treatment, then selecting MBR as the recycled water technology is the most cost effective option. If activated sludge or wetlands is chosen as the secondary treatment, then MF + RO is the most cost-effective option, with MF + blending (with blending until SIP) as a close second.

4.3 Preliminary Siting of Alternatives

Preliminary discussions with the City indicate that the future recycled water treatment equipment could be sited at the following locations:

- Administration building (to be demolished as part of the SIP)
- Sludge lagoons

The administration building area is of a sufficient size to allow for the siting of a smaller MF system for Alternative 2. The sludge lagoon and dewatering bed area occupies several acres of the site and could easily fit any of the alternatives. Figures 8 and 9 show preliminary options for where the two alternatives could be sited. Final siting of the selected recycled water alternative should consider the other improvements completed as part of the SIP.

 © Kennedy/Jenks Consultants, Inc.

Path: \\pao-vm\project\12\1288012.00_Sunnyvale_Recycled_Water_Master_Plan\Section_09-Report_Preparation\9.09-Report\TM#2_Treatment Alternatives\Figures\F1 MF System_.mxd

Source:Bing Aerial 2012

Legend

Preliminary Siting of MF System

N

0 100 200 Feet

Kennedy/Jenks Consultants

City of Sunnyvale Recycled Water Master Plan
Treatment Alternatives Evaluation

Preliminary Siting of MF System

K/J 1288012*00
February 2013

Figure 8

Path: \\pao-vm\project\12\1288012.00_Sunnyvale_Recycled_Water_Master_Plan\Section_09-Report_Preparation\9.09-Report\TM#2_Treatment Alternatives\Figures\F2 MBR System.mxd

Source:Bing Aerial 2012

Legend

Preliminary Siting of MBR System

N

0 100 200 Feet

Kennedy/Jenks Consultants

Sunnyvale, California

Preliminary Siting of MBR System

K/J 1288012*00
February 2013

Figure 9

5.0 Recommended Phasing Strategy

Since the implementation of a MBR recycled water system would not be at risk of becoming a stranded asset, as shown in Table 13, the City would like to proceed in implementing an MBR system for recycled water production. Due to the treatment challenges the City currently experiences, the City prefers to initiate recycled water treatment improvements immediately. With an MBR system, the City will have the advantage of being able to increase treatment capacity over time with minimal operational challenges by adding MBR units. Furthermore, this allows the City to phase treatment capacity over time without requiring full build-out of the treatment system to meet current and future demands.

To meet the growing recycled water demands over time, the MBR system could be installed in the following phases:

- 0 to 5 years: Install 1.7 mgd MBR system to produce 1.7 mgd of recycled water. This would meet the objective of producing recycled water constantly and avoiding operational issues.
- 5 to 10 years: Install 0.5 mgd MBR system to expand total recycled water production to 2.2 mgd.
- 10+ years: Install 1.4 mgd MBR system to expand total recycled water production to 3.6 mgd.

A timeline is shown in Figure 10.

The total NPV lifecycle cost of this phased strategy is estimated to be $107 million, with a unit cost of $1,380 per AF.

 © Kennedy/Jenks Consultants, Inc.

	Years 1 to 5	Years 6 to 10	Years 11 to 30
	1 2 3 4 5	6 7 8 9 10	11 12 13 14 15 16 17 18 19 20 21 22 23 24 25 26 27 28 29 30
MBR Phasing Strategy			
Install Alternative 4, Phase 1 (1.7 mgd MBR)	**Capital:** $20 million **O&M:** $0.5 mil/yr		
Install Alternative 4, Phase 2 (0.5 mgd MBR)		**Capital:** $11 million **O&M:** $0.3 mil/yr	
Implement Alternative 4, Phase 3 (1.4 mgd MBR)			**Capital:** $25 million **O&M:** $0.5 million/year
Implement SIP (18.8 mgd MBR)			**Capital:** $415 million **O&M:** $6 million/year

Recycled water capital improvements

SIP capital improvements

Kennedy/Jenks Consultants

City of Sunnyvale Recycled Water Master Plan

Treatment Alternatives Evaluation

Alternatives Timeline

K/J 1288012*00

February 2013

Figure 10

6.0 Summary and Next Steps

Due to operational issues and future customer needs, the City is interested in investigating alternatives for upgrading recycled water production to return to a continuous production mode and to meet anticipated future demands and quality objectives. This TM presents alternatives to meet the projected near-term recycled water demand of 3,120 AFY and, as a secondary objective, to reduce the recycled water TDS concentration to 760 mg/L with no visible color.

The proposed alternatives are:

- **Alternative 1 – Blending with Potable Water:** Blend recycled water with potable water to increase volume and reduce TDS.
- **Alternative 2 – Microfiltration/Ultrafiltration (MF/UF):** Treat a sidestream of WPCP secondary effluent with MF to eliminate batch recycled water production.
- **Alternative 3 – Microfiltration/Reverse Osmosis (MF/RO):** Treat a sidestream of WPCP secondary effluent with MF to eliminate batch recycled water production and to reduce TDS.
- **Alternative 4 – Membrane Bioreactor (MBR):** Treat a sidestream of WPCP primary effluent with MBR to eliminate batch recycled water production, avoid TDS increase through secondary processes at WPCP.

Preliminary discussions with the City indicated that they do not want to pursue blending alone as a long-term option, so Alternative 1 was eliminated from further consideration.

The remaining alternatives were evaluated while considering financial and other impacts to the SIP secondary treatment alternatives. The evaluation determined the following options:

- If activated sludge or wetlands is implemented in the SIP, then MF + RO is the least cost option, followed closely by MF + blending.
- If MBR is implemented in the SIP, then MBR would be the least cost option.

The City is interested in installing a small MBR system, possibly in the next several years, to meet current demands; therefore it would make sense to expand the recycled water system during later phases by adding additional MBR units. Phased construction of a recycled water system using MBR (from 1.7 mgd to 2.2 mgd to 3.6 mgd) is estimated to have a NPV lifecycle cost of $107 million and a unit cost of $1,380 per AF.

 © Kennedy/Jenks Consultants, Inc.

References

Brown and Caldwell. Plant Replacement Alternatives Summary. November 2009.

CH2MHill. Peer Review of the Water Pollution Control Plant Strategic Infrastructure Plan. June 2011.

City of Sunnyvale. 2011 Water Quality Report.

Eisenberg, Olivieri & Associates (EOA). Analysis of Elevated Salinity in Recycled Water. January 2012.

Eisenberg, Olivieri & Associates (EOA). City of Sunnyvale, 2011 Recycled Water Annual Report. March 2012.

HydroScience Engineers, Inc. City of Sunnyvale 2010 Urban Water Management Plan. June 2011.

HydroScience Engineers, Inc. TM #1 – Recycled Water Market Assessment. August 2012.

 © Kennedy/Jenks Consultants, Inc.

ATTACHMENT A – EQUIPMENT SIZING CALCULATIONS

The following equations were used to calculate the flowrate (Q) and TDS concentration (C) of the flow streams for each alternative:

1. $Q_1 + Q_2 = Q_{1+2}$ (= 3,120 AFY or 3.6 mgd average day)
2. $(Q_1 \bullet C_1 + Q_2 \bullet C_2) / Q_{1+2} = C_{1+2}$ (= 760 mg/L TDS)

These equations were used to calculate the ratios of the various flow streams (such as recycled water to potable water) to target the demand and water quality goals. Once the ratios were known, the average day flow for a given flow stream (such as the flow treated by the MF system) was used to size that equipment. As described in the TM, the recycled water technologies have been sized to meet average day demand, and potable water would be used to supplement the recycled water supply on peak days during which the demand cannot be met by storage alone.

Alternative 1

Parameter	Alternative 1 – Blending		
	RW	Potable Water	RW Blend[1]
Average Annual Demand (AFY)	2,485	635	3,120
Average Day Flow (mgd)	2.9	0.7	3.6
Average TDS (mg/L)	930	95	760

1. Flow and TDS Characteristics

2,485 AFY + 635 AFY = 3,120 AFY

(2,485 AFY • 930 mg/L + 635 AFY • 95 mg/L) / 3,120 AFY = 760 mg/L TDS

Alternative 2 – Phase 1

Parameter	Phase 1 – MF + Blending		
	RW (MF)	Potable Water	RW Blend
Average Annual Demand (AFY)	2,485	635	3,120
Average Day Flow (mgd)	2.9	0.7	3.6
Average TDS (mg/L)	930	95	760
MF Design Capacity (mgd)	2.9		

 © Kennedy/Jenks Consultants, Inc.

1. Flow and TDS Characteristics

2,485 AFY + 635 AFY = 3,120 AFY

(2,4 AFY • 930 mg/L + 635 AFY • 95 mg/L) / 3,120 AFY = 760 mg/L TDS

2. Equipment Sizing

$\frac{\text{3.6 mgd average day flow}}{\text{3,120 AFY}}$ • 2,485 AFY = 2.9 mgd MF filtrate capacity

3.6 mgd total – 2.9 mgd MF = 0.7 mgd potable water

Alternative 3

Parameter	Alternative 3 – MF / RO		
	RW (MF/RO)	RW (MF Only/ RO Bypass)	RW Blend
Average Annual Demand (AFY)	730	2,390	3,120
Average Day Flow (mgd)	0.8	2.8	3.6
Average TDS (mg/L)	190	930	760
MF Design Capacity (mgd)	3.8		
RO Design Capacity (mgd)	1.0		

1. Flow and TDS Characteristics

730 AFY + 2,390 AFY = 3,120 AFY

(730 AFY • 190 mg/L + 2,390 AFY • 930 mg/L) / 3,120 AFY = 760 mg/L TDS

2. Equipment Sizing

$\frac{\text{3.6 mgd average day flow}}{\text{3,200 AFY}}$ • 730 AFY = 0.8 mgd RO permeate capacity

3.6 mgd total – 0.8 mgd RO = 2.8 mgd RO bypass

0.8 mgd RO permeate / 80% efficiency = 1.0 mgd RO influent

1.0 mgd RO influent – 0.8 mgd RO permeate = 0.2 mgd RO concentrate

1.0 mgd RO influent + 2.8 RO bypass = 3.8 MF effluent capacity

 © Kennedy/Jenks Consultants, Inc.

ATTACHMENT B – PLANNING-LEVEL OPINION OF PROBABLE COST

A planning-level opinion of probable cost has been developed for each alternative based on recent Kennedy/Jenks project experience. The alternatives have been developed to a planning level, with conceptual design criteria and a basic understanding of project conditions and limitations. Therefore, the level of accuracy for the capital and operating cost estimates presented should be considered to represent a Class 5 estimate (according to standard AACE cost estimating guidelines) with an estimated level of accuracy of -30 to +50 percent.

The following notes apply to the tables shown below:

1) Construction costs do not vary linearly with capacity; therefore, the construction cost is calculated using the exponential rule based on empirical data cited in the literature: y = yn(Q/Qn)m, where yn = known cost of an existing facility with capacity Qn; y = estimated cost of new facility with capacity Q; and m = value from 0.5 to 0.9 (in this case, 0.6 is assumed).
2) Although the 2011 estimate separated the capital cost and footprint by treatment technology, the O&M cost estimate include additional chemical facilities and chlorination. These features already exist at Sunnyvale and need to be removed.
3) The cost estimates include the following assumptions:
    - Process Piping and Break Tank Allowance (10%)
    - Plant SCADA and Computer Upgrade (5%)
    - General Conditions (5%)
    - Mobilization and Demobilization (5%)
    - Bonds and Insurance (5%)
    - Contractor's Overhead (10%)
    - Contractor's Profit (10%)
    - Project Contingency (20%)

 © Kennedy/Jenks Consultants, Inc.

Alternative 2 – Phase 1

2.9-mgd MF System	Correction Factor	Capital Cost ($ million)	O&M Cost ($ mil/year)	Footprint (sq ft)
2011 estimate for 5 mgd MF system		$10	$0.4	15,000
Exponentially reduced to 2.9 mgd[1]	0.6	$7	$0.3	10,000
Minus chlorination[2] % of scaled from estimate	80%	--	$0.2	--
Total		**$7**	**$0.2**	**10,000**

Alternative 2 – Phase 2

3.6-mgd MF System	Correction Factor	Capital Cost ($ million)	O&M Cost ($ mil/year)	Footprint (sq ft)
2011 estimate for 5 mgd MF system		$10	$0.4	15,000
Exponentially reduced to 3.6 mgd[1]	0.6	$8	$0.3	12,000
Minus chlorination[2] % of scaled from estimate	80%	--	$0.3	--
Total		**$8**	**$0.3**	**12,000**

 © Kennedy/Jenks Consultants, Inc.

Alternative 3

	Correction Factor	Capital Cost ($ mil)	O&M Cost ($ mil/year)	Footprint (sq ft)
3.8-mgd MF System				
2011 estimate for 5 mgd MF system		$10	$0.4	15,000
Exponentially reduced to 3.8 mgd[1]	0.6	$8	$0.3	12,000
Minus chlorination[2] % of scaled from estimate	80%	--	$0.3	--
Subtotal		**$8**	**$0.3**	**12,000**
0.8 mgd RO System				
2011 estimate for 3 mgd RO system		$10	$0.3	13,000
Exponentially reduced to 0.8 mgd[1]	0.6	$5	$0.1	6,000
Minus chlorination % of scaled from estimate	80%	**--**	$0.1	--
Subtotal		**$5**	**$0.1**	**6,000**
Total		**$13**	**$0.4**	**18,000**

Alternative 4

3.6-mgd MBR System	Correction Factor	Capital Cost ($ million)	O&M Cost ($ mil/ year)	Footprint (sq ft)
2011 estimate for 4.5 mgd MBR		$33	$0.7	53,000
Exponentially decreased to 3.6 mgd[1]	0.6	$29	$0.6	47,000
Minus chlorination % of scaled from estimate	80%	**--**	$0.5	--
Total		**$29**	**$0.5**	**47,000**

 © Kennedy/Jenks Consultants, Inc.

ATTACHMENT C – PLANNING-LEVEL LIFECYCLE COST ESTIMATE

 © Kennedy/Jenks Consultants, Inc.

Alternative 1 - Blending

NPV of Capital ($ mil)	Average Annual O&M ($ mil/year)	NPV ($ mil)	Unit Cost (NPV $/AF)
$0	$2.4	$43	$430

Rates	
6.0%	Loan/Bond Rate
13.0%	Loan/Bond Issuance Cost %
2.5%	Inflation
3.1%	Real Discount Rate
30	year life, Phase 1
5.0%	Water cost increase, 2021+

LIFECYCLE COST ESTIMATE

Year	Total Blended Recycled Water (AFY)	Potable Water to Meet Peak (AFY)	Total Capital Cost ($ mil)	Annual Debt Service ($ mil/yr)	O&M Cost ($ mil/yr)	Potable Water Unit Cost ($/AF)[1]	Potable Water Cost ($ mil/yr)	Total O&M Cost ($ mil/yr)	Total Annual Cost ($ mil/yr)
2013	3,120	720	$0	$0.00	$0.00	$625	$0.8	$0.8	$0.8
2014	3,120	720			$0.00	$685	$0.9	$0.9	$0.9
2015	3,120	720			$0.00	$750	$1.0	$1.0	$1.0
2016	3,120	720			$0.00	$820	$1.1	$1.1	$1.1
2017	3,120	720			$0.00	$895	$1.2	$1.2	$1.2
2018	3,120	720			$0.00	$970	$1.3	$1.3	$1.3
2019	3,120	720			$0.00	$1,030	$1.4	$1.4	$1.4
2020	3,120	720			$0.00	$1,085	$1.5	$1.5	$1.5
2021	3,120	720			$0.00	$1,130	$1.5	$1.5	$1.5
2022	3,120	720			$0.00	$1,187	$1.6	$1.6	$1.6
2023	3,120	720			$0.00	$1,246	$1.7	$1.7	$1.7
2024	3,120	720			$0.00	$1,308	$1.8	$1.8	$1.8
2025	3,120	720			$0.00	$1,374	$1.9	$1.9	$1.9
2026	3,120	720			$0.00	$1,442	$2.0	$2.0	$2.0
2027	3,120	720			$0.00	$1,514	$2.1	$2.1	$2.1
2028	3,120	720			$0.00	$1,590	$2.2	$2.2	$2.2
2029	3,120	720			$0.00	$1,670	$2.3	$2.3	$2.3
2030	3,120	720			$0.00	$1,753	$2.4	$2.4	$2.4
2031	3,120	720			$0.00	$1,841	$2.5	$2.5	$2.5
2032	3,120	720			$0.00	$1,933	$2.6	$2.6	$2.6
2033	3,120	720			$0.00	$2,029	$2.7	$2.7	$2.7
2034	3,120	720			$0.00	$2,131	$2.9	$2.9	$2.9
2035	3,120	720			$0.00	$2,237	$3.0	$3.0	$3.0
2036	3,120	720			$0.00	$2,349	$3.2	$3.2	$3.2
2037	3,120	720			$0.00	$2,467	$3.3	$3.3	$3.3
2038	3,120	720			$0.00	$2,590	$3.5	$3.5	$3.5
2039	3,120	720			$0.00	$2,719	$3.7	$3.7	$3.7
2040	3,120	720			$0.00	$2,855	$3.9	$3.9	$3.9
2041	3,120	720			$0.00	$2,998	$4.1	$4.1	$4.1
2042	3,120	720			$0.00	$3,148	$4.3	$4.3	$4.3
2043	3,120	720			$0.00	$3,306	$4.5	$4.5	$4.5
2044	3,120	720			$0.00	$3,471	$4.7	$4.7	$4.7
Total	**99,840**								

Notes:

[1] Costs from 2012 through 2021 are from the 2010 Urban Water Management Plan (HydroScience, 2011). Escalation from 2022 through 2046 is assumed to be 5%.

Blending until Recycled Water Capital Project

NPV of Capital ($ mil)	Average Annual O&M ($ mil/year)	NPV ($ mil)	Unit Cost (NPV $/AF)
$0	$0.9	$1.7	$270

Rates	
6.0%	Loan/Bond Rate
13.0%	Loan/Bond Issuance Cost %
2.5%	Inflation
3.1%	Real Discount Rate
30	year life, Phase 1
5.0%	Water cost increase, 2021+

LIFECYCLE COST ESTIMATE									
Year	Total Blended Recycled Water (AFY)	Potable Water to Meet Peak (AFY)	Total Capital Cost ($ mil)	Annual Debt Service ($ mil/yr)	O&M Cost ($ mil/yr)	Potable Water Unit Cost ($/AF)[1]	Potable Water Cost ($ mil/yr)	Total O&M Cost ($ mil/yr)	Total Annual Cost ($ mil/yr)
2013	3,120	720	$0	$0.00	$0.00	$625	$0.8	$0.8	$0.8
2014	3,120	720			$0.00	$685	$0.9	$0.9	$0.9
Total	**6,240**								

Notes: [1] Costs from 2012 through 2021 are from the 2010 Urban Water Management Plan (HydroScience, 2011). Escalation from 2022 through 2046 is assumed to be 5%.

Blending until SIP

NPV of Capital ($ mil)	Average Annual O&M ($ mil/year)	NPV ($ mil)	Unit Cost (NPV $/AF)
$0	$1.3	$12	$340

LIFECYCLE COST ESTIMATE									
Year	Total Blended Recycled Water (AFY)	Potable Water to Meet Peak (AFY)	Total Capital Cost ($ mil)	Annual Debt Service ($ mil/yr)	O&M Cost ($ mil/yr)	Potable Water Unit Cost ($/AF)[1]	Potable Water Cost ($ mil/yr)	Total O&M Cost ($ mil/yr)	Total Annual Cost ($ mil/yr)
2013	3,120	720	$0	$0.00	$0.00	$625	$0.8	$0.8	$0.8
2014	3,120	720			$0.00	$685	$0.9	$0.9	$0.9
2015	3,120	720			$0.00	$750	$1.0	$1.0	$1.0
2016	3,120	720			$0.00	$820	$1.1	$1.1	$1.1
2017	3,120	720			$0.00	$895	$1.2	$1.2	$1.2
2018	3,120	720			$0.00	$970	$1.3	$1.3	$1.3
2019	3,120	720			$0.00	$1,030	$1.4	$1.4	$1.4
2020	3,120	720			$0.00	$1,085	$1.5	$1.5	$1.5
2021	3,120	720			$0.00	$1,130	$1.5	$1.5	$1.5
2022	3,120	720			$0.00	$1,187	$1.6	$1.6	$1.6
2023	3,120	720			$0.00	$1,246	$1.7	$1.7	$1.7
Total	**34,320**								

Alternative 2 - MF + Blending (Blending until SIP)

2012 dollars	Total Capital Cost ($ mil)[1]	O&M Cost ($ mil/yr)[1]
2.9-mgd MF	$7	$0.2
0.7-mgd MF	$3	$0.1

NPV of Capital ($ mil)	Average Annual O&M ($ mil/year)	NPV ($ mil)	Unit Cost (NPV $/AF)
$10	$3.0	$70	$740

Rates	
6.0%	Loan/Bond Rate
13.0%	Loan/Bond Issuance Cost %
2.5%	Inflation
3.1%	Real Discount Rate
30	year Life/Payback Period, Phase 1
22	year Life/Payback Period, Phase 2
5.0%	Water cost increase, 2021+

LIFECYCLE COST ESTIMATE

Year	Total Blended Recycled Water (AFY)	Potable Water to Meet Peak (AFY)	Total Capital Cost ($ mil)	Annual Debt Service ($ mil/yr)	O&M Cost ($ mil/yr)	Potable Water Unit Cost ($/AF)[2]	Potable Water Cost ($ mil/yr)	Total O&M Cost ($ mil/yr)	Total Annual Cost ($ mil/yr)
2015	3,120	720	$8	$0.63	$0.24	$750	$1.0	$1.3	$1.9
2016	3,120	720		$0.63	$0.25	$820	$1.1	$1.4	$2.0
2017	3,120	720		$0.63	$0.26	$895	$1.2	$1.5	$2.1
2018	3,120	720		$0.63	$0.26	$970	$1.3	$1.6	$2.2
2019	3,120	720		$0.63	$0.27	$1,030	$1.4	$1.7	$2.3
2020	3,120	720		$0.63	$0.27	$1,085	$1.5	$1.8	$2.4
2021	3,120	720		$0.63	$0.28	$1,130	$1.5	$1.8	$2.5
2022	3,120	720		$0.63	$0.29	$1,187	$1.6	$1.9	$2.5
2023	3,120	720	$4	$1.01	$0.43	$1,246	$1.7	$2.1	$3.1
2024	3,120	720		$1.01	$0.44	$1,308	$1.8	$2.2	$3.2
2025	3,120	720		$1.01	$0.45	$1,374	$1.9	$2.3	$3.3
2026	3,120	720		$1.01	$0.46	$1,442	$2.0	$2.4	$3.4
2027	3,120	720		$1.01	$0.47	$1,514	$2.1	$2.5	$3.6
2028	3,120	720		$1.01	$0.48	$1,590	$2.2	$2.7	$3.7
2029	3,120	720		$1.01	$0.50	$1,670	$2.3	$2.8	$3.8
2030	3,120	720		$1.01	$0.51	$1,753	$2.4	$2.9	$3.9
2031	3,120	720		$1.01	$0.52	$1,841	$2.5	$3.0	$4.1
2032	3,120	720		$1.01	$0.53	$1,933	$2.6	$3.2	$4.2
2033	3,120	720		$1.01	$0.55	$2,029	$2.8	$3.3	$4.3
2034	3,120	720		$1.01	$0.56	$2,131	$2.9	$3.5	$4.5
2035	3,120	720		$1.01	$0.57	$2,237	$3.1	$3.6	$4.6
2036	3,120	720		$1.01	$0.59	$2,349	$3.2	$3.8	$4.8
2037	3,120	720		$1.01	$0.60	$2,467	$3.4	$4.0	$5.0
2038	3,120	720		$1.01	$0.62	$2,590	$3.5	$4.2	$5.2
2039	3,120	720		$1.01	$0.63	$2,719	$3.7	$4.4	$5.4
2040	3,120	720		$1.01	$0.65	$2,855	$3.9	$4.6	$5.6
2041	3,120	720		$1.01	$0.67	$2,998	$4.1	$4.8	$5.8
2042	3,120	720		$1.01	$0.68	$3,148	$4.3	$5.0	$6.0
2043	3,120	720		$1.01	$0.70	$3,306	$4.5	$5.2	$6.2
2044	3,120	720		$1.01	$0.72	$3,471	$4.8	$5.5	$6.5
Total	**93,600**								

Notes: [1] See Appendix B for capital and O&M cost details.

[2] Costs from 2015 through 2021 are from the 2010 Urban Water Management Plan (HydroScience, 2011). Escalation from 2022 through 2046 is assumed to be 5%.

Alternative 3 - MF + RO

2012 dollars	Total Capital Cost ($ mil)[1]		O&M Cost ($ mil/yr)[1]
MF + RO	$13		$0.40
NPV of Capital ($ mil)	**Average Annual O&M ($ mil/year)**	**NPV ($ mil)**	**Unit Cost (NPV $/AF)**
$13	$2.0	$57	$610

Rates	
6.0%	Loan/Bond Rate
13.0%	Loan/Bond Issuance Cost %
2.5%	Inflation
3.1%	Real Discount Rate
30	year Life/Payback Period
5.0%	Water cost increase, 2021+

LIFECYCLE COST ESTIMATE

Year	Total Blended Recycled Water (AFY)	Potable Water to Meet Peak (AFY)	Total Capital Cost ($ mil)	Annual Debt Service ($ mil/yr)	O&M Cost ($ mil/yr)	Potable Water Unit Cost ($/AF)[2]	Potable Water Cost ($ mil/yr)	Total O&M Cost ($ mil/yr)	Total Annual Cost ($ mil/yr)
2015	3,120	720	$14	$1.15	$0.43	$750	$0.5	$1.0	$2.1
2016	3,120	720		$1.15	$0.44	$820	$0.6	$1.0	$2.2
2017	3,120	720		$1.15	$0.45	$895	$0.6	$1.1	$2.2
2018	3,120	720		$1.15	$0.46	$970	$0.7	$1.2	$2.3
2019	3,120	720		$1.15	$0.48	$1,030	$0.7	$1.2	$2.4
2020	3,120	720		$1.15	$0.49	$1,085	$0.8	$1.3	$2.4
2021	3,120	720		$1.15	$0.50	$1,130	$0.8	$1.3	$2.5
2022	3,120	720		$1.15	$0.51	$1,187	$0.9	$1.4	$2.5
2023	3,120	720		$1.15	$0.52	$1,246	$0.9	$1.4	$2.6
2024	3,120	720		$1.15	$0.54	$1,308	$0.9	$1.5	$2.6
2025	3,120	720		$1.15	$0.55	$1,374	$1.0	$1.5	$2.7
2026	3,120	720		$1.15	$0.57	$1,442	$1.0	$1.6	$2.8
2027	3,120	720		$1.15	$0.58	$1,514	$1.1	$1.7	$2.8
2028	3,120	720		$1.15	$0.59	$1,590	$1.1	$1.7	$2.9
2029	3,120	720		$1.15	$0.61	$1,670	$1.2	$1.8	$3.0
2030	3,120	720		$1.15	$0.62	$1,753	$1.3	$1.9	$3.0
2031	3,120	720		$1.15	$0.64	$1,841	$1.3	$2.0	$3.1
2032	3,120	720		$1.15	$0.66	$1,933	$1.4	$2.0	$3.2
2033	3,120	720		$1.15	$0.67	$2,029	$1.5	$2.1	$3.3
2034	3,120	720		$1.15	$0.69	$2,131	$1.5	$2.2	$3.4
2035	3,120	720		$1.15	$0.71	$2,237	$1.6	$2.3	$3.5
2036	3,120	720		$1.15	$0.72	$2,349	$1.7	$2.4	$3.6
2037	3,120	720		$1.15	$0.74	$2,467	$1.8	$2.5	$3.7
2038	3,120	720		$1.15	$0.76	$2,590	$1.9	$2.6	$3.8
2039	3,120	720		$1.15	$0.78	$2,719	$2.0	$2.7	$3.9
2040	3,120	720		$1.15	$0.80	$2,855	$2.1	$2.9	$4.0
2041	3,120	720		$1.15	$0.82	$2,998	$2.2	$3.0	$4.1
2042	3,120	720		$1.15	$0.84	$3,148	$2.3	$3.1	$4.3
2043	3,120	720		$1.15	$0.86	$3,306	$2.4	$3.2	$4.4
2044	3,120	720		$1.15	$0.88	$3,471	$2.5	$3.4	$4.5
Total	**93,600**								

Notes:

[1] See Appendix B for capital and O&M cost details.

[2] Costs from 2012 through 2021 are from the 2010 Urban Water Management Plan (HydroScience, 2011). Escalation from 2022 through 2046 is assumed to be 5%.

Alternative 4 - MBR

2012 dollars	Total Capital Cost ($ mil)[1]		O&M Cost ($ mil/yr)[1]
MBR	$29		$0.50
NPV of Capital ($ mil)	**Average Annual O&M ($ mil/year)**	**NPV ($ mil)**	**Unit Cost (NPV $/AF)**
$29	$2.1	$85	$910

Rates	
6.0%	Loan/Bond Rate
13.0%	Loan/Bond Issuance Cost %
2.5%	Inflation
3.1%	Real Discount Rate
30	year Life/Payback Period
5.0%	Water cost increase, 2021+

LIFECYCLE COST ESTIMATE

Year	Total Blended Recycled Water (AFY)	Potable Water to Meet Peak (AFY)	Total Capital Cost ($ mil)	Annual Debt Service ($ mil/yr)	O&M Cost ($ mil/yr)	Potable Water Unit Cost ($/AF)[2]	Potable Water Cost ($ mil/yr)	Total O&M Cost ($ mil/yr)	Total Annual Cost ($ mil/yr)
2015	3,120	720	$31	$2.56	$0.54	$750	$0.5	$1.1	$1.1
2016	3,120	720		$2.56	$0.55	$820	$0.6	$1.1	$3.7
2017	3,120	720		$2.56	$0.57	$895	$0.6	$1.2	$3.8
2018	3,120	720		$2.56	$0.58	$970	$0.7	$1.3	$3.8
2019	3,120	720		$2.56	$0.59	$1,030	$0.7	$1.3	$3.9
2020	3,120	720		$2.56	$0.61	$1,085	$0.8	$1.4	$4.0
2021	3,120	720		$2.56	$0.62	$1,130	$0.8	$1.4	$4.0
2022	3,120	720		$2.56	$0.64	$1,187	$0.9	$1.5	$4.1
2023	3,120	720		$2.56	$0.66	$1,246	$0.9	$1.6	$4.1
2024	3,120	720		$2.56	$0.67	$1,308	$0.9	$1.6	$4.2
2025	3,120	720		$2.56	$0.69	$1,374	$1.0	$1.7	$4.2
2026	3,120	720		$2.56	$0.71	$1,442	$1.0	$1.7	$4.3
2027	3,120	720		$2.56	$0.72	$1,514	$1.1	$1.8	$4.4
2028	3,120	720		$2.56	$0.74	$1,590	$1.1	$1.9	$4.5
2029	3,120	720		$2.56	$0.76	$1,670	$1.2	$2.0	$4.5
2030	3,120	720		$2.56	$0.78	$1,753	$1.3	$2.0	$4.6
2031	3,120	720		$2.56	$0.80	$1,841	$1.3	$2.1	$4.7
2032	3,120	720		$2.56	$0.82	$1,933	$1.4	$2.2	$4.8
2033	3,120	720		$2.56	$0.84	$2,029	$1.5	$2.3	$4.9
2034	3,120	720		$2.56	$0.86	$2,131	$1.5	$2.4	$5.0
2035	3,120	720		$2.56	$0.88	$2,237	$1.6	$2.5	$5.1
2036	3,120	720		$2.56	$0.90	$2,349	$1.7	$2.6	$5.2
2037	3,120	720		$2.56	$0.93	$2,467	$1.8	$2.7	$5.3
2038	3,120	720		$2.56	$0.95	$2,590	$1.9	$2.8	$5.4
2039	3,120	720		$2.56	$0.97	$2,719	$2.0	$2.9	$5.5
2040	3,120	720		$2.56	$1.00	$2,855	$2.1	$3.1	$5.6
2041	3,120	720		$2.56	$1.02	$2,998	$2.2	$3.2	$5.7
2042	3,120	720		$2.56	$1.05	$3,148	$2.3	$3.3	$5.9
2043	3,120	720		$2.56	$1.08	$3,306	$2.4	$3.5	$6.0
2044	3,120	720		$2.56	$1.10	$3,471	$2.5	$3.6	$6.2
Total	**93,600**								

Notes:

[1] See Appendix B for capital and O&M cost details.

[2] Costs from 2012 through 2021 are from the 2010 Urban Water Management Plan (HydroScience, 2011). Escalation from 2022 through 2046 is assumed to be 5%.

Secondary MBR + Recycled Water MBR

NPV of Capital ($ mil)	Average Annual O&M ($ mil/year)	NPV ($ mil)
$345	$6.5	$640

Rates	
3.1%	Real Discount Rate

LIFECYCLE COST ESTIMATE				
Year	Total Capital Cost ($ mil)[1,2]	Annual Debt Service ($ mil/yr)	Total O&M Cost ($ mil/yr)[1,2]	Total Cost ($ mil/yr)
2015	$31	$2.56	$1.1	$3.6
2016		$2.56	$1.1	$3.7
2017		$2.56	$1.2	$3.8
2018		$2.56	$1.3	$3.8
2019		$2.56	$1.3	$3.9
2020		$2.56	$1.4	$4.0
2021		$2.56	$1.4	$4.0
2022		$2.56	$1.5	$4.1
2023	$415	$41.47	$6.1	$47.6
2024		$41.47	$6.3	$47.8
2025		$41.47	$6.5	$48.0
2026		$41.47	$6.7	$48.2
2027		$41.47	$6.9	$48.4
2028		$41.47	$7.1	$48.6
2029		$41.47	$7.3	$48.8
2030		$41.47	$7.5	$49.0
2031		$41.47	$7.7	$49.2
2032		$41.47	$7.9	$49.4
2033		$41.47	$8.2	$49.7
2034		$41.47	$8.4	$49.9
2035		$41.47	$8.7	$50.1
2036		$41.47	$8.9	$50.4
2037		$41.47	$9.2	$50.7
2038		$41.47	$9.5	$50.9
2039		$41.47	$9.7	$51.2
2040		$41.47	$10.0	$51.5
2041		$41.47	$10.3	$51.8
2042		$41.47	$10.7	$52.1
2043		$41.47	$11.0	$52.5
2044		$41.47	$11.3	$52.8

Notes:

[1] See Appendix B for recycled water system capital and O&M cost details.

[2] Secondary treatment cost estimate from Plant Replacement Alternatives Summary, Brown and Caldwell, November 2009.

Secondary AS + Recycled Water MBR

NPV of Capital ($ mil)	Average Annual O&M ($ mil/year)	NPV ($ mil)
$284	$5.5	$531

Rates	
3.1%	Real Discount Rate

LIFECYCLE COST ESTIMATE				
Year	Total Capital Cost ($ mil)	Annual Debt Service ($ mil/yr)	Total O&M Cost ($ mil/yr)	Total Cost ($ mil/yr)
2015	$31	$2.56	$1.1	$3.6
2016		$2.56	$1.1	$3.7
2017		$2.56	$1.2	$3.8
2018		$2.56	$1.3	$3.8
2019		$2.56	$1.3	$3.9
2020		$2.56	$1.4	$4.0
2021		$2.56	$1.4	$4.0
2022		$2.56	$1.5	$4.1
2023	$335	$34.00	$5.1	$39.1
2024		$34.00	$5.2	$39.2
2025		$34.00	$5.4	$39.4
2026		$34.00	$5.5	$39.5
2027		$34.00	$5.7	$39.7
2028		$34.00	$5.9	$39.9
2029		$34.00	$6.0	$40.0
2030		$34.00	$6.2	$40.2
2031		$34.00	$6.4	$40.4
2032		$34.00	$6.6	$40.6
2033		$34.00	$6.8	$40.8
2034		$34.00	$7.0	$41.0
2035		$34.00	$7.2	$41.2
2036		$34.00	$7.4	$41.4
2037		$34.00	$7.7	$41.7
2038		$34.00	$7.9	$41.9
2039		$34.00	$8.2	$42.2
2040		$34.00	$8.4	$42.4
2041		$34.00	$8.7	$42.7
2042		$34.00	$8.9	$42.9
2043		$34.00	$9.2	$43.2
2044		$34.00	$9.5	$43.5

Notes: [1] See Appendix B for recycled water system capital and O&M cost details.

[2] Secondary treatment cost estimate from Plant Replacement Alternatives Summary, Brown and Caldwell, November 2009.

Secondary MBR + Recycled Water MF/Blend

NPV of Capital ($ mil)	Average Annual O&M ($ mil/year)	NPV ($ mil)
$358	$8.3	$689

Rates	
3.1%	Real Discount Rate

LIFECYCLE COST ESTIMATE				
Year	Total Capital Cost ($ mil)	Annual Debt Service ($ mil/yr)	Total O&M Cost ($ mil/yr)	Total Cost ($ mil/yr)
2015	$7.6	$0.63	$1.3	$1.9
2016		$0.63	$1.4	$2.0
2017		$0.63	$1.5	$2.1
2018		$0.63	$1.6	$2.2
2019		$0.63	$1.7	$2.3
2020		$0.63	$1.8	$2.4
2021		$0.63	$1.8	$2.5
2022		$0.63	$1.9	$2.5
2023	$460	$44.19	$7.6	$51.8
2024		$44.19	$7.8	$52.0
2025		$44.19	$8.1	$52.3
2026		$44.19	$8.3	$52.5
2027		$44.19	$8.6	$52.8
2028		$44.19	$8.8	$53.0
2029		$44.19	$9.1	$53.3
2030		$44.19	$9.4	$53.6
2031		$44.19	$9.7	$53.9
2032		$44.19	$10.0	$54.2
2033		$44.19	$10.3	$54.5
2034		$44.19	$10.6	$54.8
2035		$44.19	$11.0	$55.2
2036		$44.19	$11.3	$55.5
2037		$44.19	$11.7	$55.9
2038		$44.19	$12.1	$56.3
2039		$44.19	$12.5	$56.7
2040		$44.19	$12.9	$57.1
2041		$44.19	$13.3	$57.5
2042		$44.19	$13.7	$57.9
2043		$44.19	$14.2	$58.4
2044		$44.19	$14.6	$58.8

Notes: [1] See Appendix B for recycled water system capital and O&M cost details.

[2] Secondary treatment cost estimate from Plant Replacement Alternatives Summary, Brown and Caldwell, November 2009.

Secondary AS + Recycled Water MF/Blend

NPV of Capital ($ mil)	Average Annual O&M ($ mil/year)	NPV ($ mil)
$262	$7.1	$524

Rates	
3.1%	Real Discount Rate

LIFECYCLE COST ESTIMATE				
Year	Total Capital Cost ($ mil)	Annual Debt Service ($ mil/yr)	Total O&M Cost ($ mil/yr)	Total Cost ($ mil/yr)
2015	$7.6	$0.63	$1.3	$1.9
2016		$0.63	$1.4	$2.0
2017		$0.63	$1.5	$2.1
2018		$0.63	$1.6	$2.2
2019		$0.63	$1.7	$2.3
2020		$0.63	$1.8	$2.4
2021		$0.63	$1.8	$2.5
2022		$0.63	$1.9	$2.5
2023	$335	$32.44	$6.3	$38.8
2024		$32.44	$6.5	$39.0
2025		$32.44	$6.7	$39.2
2026		$32.44	$7.0	$39.4
2027		$32.44	$7.2	$39.6
2028		$32.44	$7.4	$39.8
2029		$32.44	$7.6	$40.1
2030		$32.44	$7.9	$40.3
2031		$32.44	$8.1	$40.6
2032		$32.44	$8.4	$40.9
2033		$32.44	$8.7	$41.1
2034		$32.44	$9.0	$41.4
2035		$32.44	$9.3	$41.7
2036		$32.44	$9.6	$42.0
2037		$32.44	$9.9	$42.4
2038		$32.44	$10.2	$42.7
2039		$32.44	$10.6	$43.0
2040		$32.44	$10.9	$43.4
2041		$32.44	$11.3	$43.8
2042		$32.44	$11.7	$44.1
2043		$32.44	$12.1	$44.5
2044		$32.44	$12.5	$45.0

Notes: [1] See Appendix B for recycled water system capital and O&M cost details.

[2] Secondary treatment cost estimate from Plant Replacement Alternatives Summary, Brown and Caldwell, November 2009.

Secondary MBR + Recycled Water MF/RO

NPV of Capital ($ mil)	Average Annual O&M ($ mil/year)	NPV ($ mil)
$364	$7.2	$677

Rates	
3.1%	Real Discount Rate

LIFECYCLE COST ESTIMATE				
Year	Total Capital Cost ($ mil)	Annual Debt Service ($ mil/yr)	Total O&M Cost ($ mil/yr)	Total Cost ($ mil/yr)
2015	$14.0	$1.15	$1.0	$2.1
2016		$1.15	$1.0	$2.2
2017		$1.15	$1.1	$2.2
2018		$1.15	$1.2	$2.3
2019		$1.15	$1.2	$2.4
2020		$1.15	$1.3	$2.4
2021		$1.15	$1.3	$2.5
2022		$1.15	$1.4	$2.5
2023	$460	$44.33	$6.9	$51.2
2024		$44.33	$7.1	$51.4
2025		$44.33	$7.3	$51.6
2026		$44.33	$7.5	$51.8
2027		$44.33	$7.7	$52.0
2028		$44.33	$7.9	$52.3
2029		$44.33	$8.1	$52.5
2030		$44.33	$8.4	$52.7
2031		$44.33	$8.6	$53.0
2032		$44.33	$8.9	$53.2
2033		$44.33	$9.1	$53.5
2034		$44.33	$9.4	$53.7
2035		$44.33	$9.7	$54.0
2036		$44.33	$9.9	$54.3
2037		$44.33	$10.2	$54.6
2038		$44.33	$10.5	$54.9
2039		$44.33	$10.8	$55.2
2040		$44.33	$11.2	$55.5
2041		$44.33	$11.5	$55.8
2042		$44.33	$11.8	$56.2
2043		$44.33	$12.2	$56.5
2044		$44.33	$12.6	$56.9

Notes: [1] See Appendix B for recycled water system capital and O&M cost details.

[2] Secondary treatment cost estimate from Plant Replacement Alternatives Summary, Brown and Caldwell, November 2009.

Secondary AS + Recycled Water MF/RO

NPV of Capital ($ mil)	Average Annual O&M ($ mil/year)	NPV ($ mil)
$268	$6.0	$511

Rates	
3.1%	Real Discount Rate

LIFECYCLE COST ESTIMATE				
Year	Total Capital Cost ($ mil)	Annual Debt Service ($ mil/yr)	Total O&M Cost ($ mil/yr)	Total Cost ($ mil/yr)
2015	$14.0	$1.15	$1.0	$2.1
2016		$1.15	$1.0	$2.2
2017		$1.15	$1.1	$2.2
2018		$1.15	$1.2	$2.3
2019		$1.15	$1.2	$2.4
2020		$1.15	$1.3	$2.4
2021		$1.15	$1.3	$2.5
2022		$1.15	$1.4	$2.5
2023	$335	$32.58	$5.6	$38.2
2024		$32.58	$5.8	$38.4
2025		$32.58	$5.9	$38.5
2026		$32.58	$6.1	$38.7
2027		$32.58	$6.3	$38.9
2028		$32.58	$6.5	$39.1
2029		$32.58	$6.7	$39.3
2030		$32.58	$6.9	$39.5
2031		$32.58	$7.1	$39.7
2032		$32.58	$7.3	$39.9
2033		$32.58	$7.5	$40.1
2034		$32.58	$7.7	$40.3
2035		$32.58	$8.0	$40.5
2036		$32.58	$8.2	$40.8
2037		$32.58	$8.4	$41.0
2038		$32.58	$8.7	$41.3
2039		$32.58	$9.0	$41.5
2040		$32.58	$9.2	$41.8
2041		$32.58	$9.5	$42.1
2042		$32.58	$9.8	$42.4
2043		$32.58	$10.1	$42.7
2044		$32.58	$10.4	$43.0

Notes: [1] See Appendix B for recycled water system capital and O&M cost details.

[2] Secondary treatment cost estimate from Plant Replacement Alternatives Summary, Brown and Caldwell, November 2009.

MBR Phasing

2012 dollars	Total Capital Cost ($ mil)[1]	O&M Cost ($ mil/yr)[1]
1.67 mgd MBR	$18	$0.30
0.51 mgd MBR	$9	$0.15
1.42 mgd MBR	$17	$0.28

NPV of Capital ($ mil)	Average Annual O&M ($ mil/year)	NPV ($ mil)	Unit Cost (NPV $/AF)
$44	$1.0	$107	$1,380

Rates	
6.0%	Loan/Bond Rate
13.0%	Loan/Bond Issuance Cost %
2.5%	Inflation
3.1%	Real Discount Rate
30	year life
5.0%	Water cost increase, 2021+

	LIFECYCLE COST ESTIMATE											
	Year	Total Blended Recycled Water (AFY)	Potable Water to Meet Peak (AFY)	Total Capital Cost ($ mil)	Annual Debt Service ($ mil/yr)	Annual O&M Costs ($ mil/yr)				Potable Water		Total Cost ($ mil/yr)
						Phase 1	Phase 2	Phase 3	Total	Unit Cost ($/AF)[2]	Annual Cost ($/yr)	
Phase 1	2015	1,557	568	$20	$1.63	$0.32			$0.3	$750	$0.4	$2.4
	2016	1,557	568		$1.63	$0.33			$0.3	$820	$0.5	$2.4
	2017	1,557	568		$1.63	$0.34			$0.3	$895	$0.5	$2.5
	2018	1,557	568		$1.63	$0.35			$0.3	$970	$0.6	$2.5
	2019	1,557	568		$1.63	$0.36			$0.4	$1,030	$0.6	$2.6
	2020	1,557	568		$1.63	$0.37			$0.4	$1,085	$0.6	$2.6
Phase 1	2021	2,322	743	$11	$2.64	$0.37	$0.19		$0.6	$1,130	$0.8	$4.0
	2022	2,322	743		$2.64	$0.38	$0.19		$0.6	$1,187	$0.9	$4.1
	2023	2,322	743		$2.64	$0.39	$0.20		$0.6	$1,246	$0.9	$4.2
	2024	2,322	743		$2.64	$0.40	$0.20		$0.6	$1,308	$1.0	$4.2
	2025	2,322	743		$2.64	$0.41	$0.21		$0.6	$1,374	$1.0	$4.3
	2026	2,322	743		$2.64	$0.42	$0.21		$0.6	$1,442	$1.1	$4.3
	2027	2,322	743		$2.64	$0.43	$0.22		$0.7	$1,514	$1.1	$4.4
	2028	2,322	743		$2.64	$0.45	$0.22		$0.7	$1,590	$1.2	$4.5
Phase 1	2029	3,124	721	$25	$5.48	$0.46	$0.23	$0.43	$1.1	$1,670	$1.2	$7.8
	2030	3,124	721		$5.48	$0.47	$0.23	$0.44	$1.1	$1,753	$1.3	$7.9
	2031	3,124	721		$5.48	$0.48	$0.24	$0.45	$1.2	$1,841	$1.3	$8.0
	2032	3,124	721		$5.48	$0.49	$0.25	$0.46	$1.2	$1,933	$1.4	$8.1
	2033	3,124	721		$5.48	$0.50	$0.25	$0.47	$1.2	$2,029	$1.5	$8.2
	2034	3,124	721		$5.48	$0.52	$0.26	$0.48	$1.3	$2,131	$1.5	$8.3
	2035	3,124	721		$5.48	$0.53	$0.26	$0.49	$1.3	$2,237	$1.6	$8.4
	2036	3,124	721		$5.48	$0.54	$0.27	$0.51	$1.3	$2,349	$1.7	$8.5
	2037	3,124	721		$5.48	$0.56	$0.28	$0.52	$1.4	$2,467	$1.8	$8.6
	2038	3,124	721		$5.48	$0.57	$0.29	$0.53	$1.4	$2,590	$1.9	$8.7
	2039	3,124	721		$5.48	$0.58	$0.29	$0.55	$1.4	$2,719	$2.0	$8.9
	2040	3,124	721		$5.48	$0.60	$0.30	$0.56	$1.5	$2,855	$2.1	$9.0
	2041	3,124	721		$5.48	$0.61	$0.31	$0.57	$1.5	$2,998	$2.2	$9.1
	2042	3,124	721		$5.48	$0.63	$0.31	$0.59	$1.5	$3,148	$2.3	$9.3
	2043	3,124	721		$5.48	$0.65	$0.32	$0.60	$1.6	$3,306	$2.4	$9.4
	2044	2,974	721		$5.48	$0.66	$0.33	$0.62	$1.6	$3,471	$2.5	$9.6
	Total	**77,752**										

Notes: [1] See Appendix B for capital and O&M cost details.

[2] Costs from 2015 through 2021 are from the 2010 Urban Water Management Plan (HydroScience, 2011). Escalation from 2022 through 2046 is assumed to be 5%.