# CITY OF SUNNYVALE

## RECREATION DIVISION, ARTS UNIT

February 16, 2011

**TO:** Arts Commission

**FROM:** Kristin Dance, Visual Arts Coordinator KHD
Diane Moglen, Arts Supervisor DM

**THROUGH:** Nancy Bolgard Steward, Superintendent of Recreation NBS

**SUBJECT:** 615 Tasman Drive (Essex Property Trust)

## Introduction

Under the City's Art in Private Development Ordinance, the development at 615 Tasman Drive is required to provide public art. The procedure established for reviewing the artwork is as follows:

1) Review the artist's background to ensure he/she has the experience and knowledge to design, fabricate and install a large-scale artwork.

2) Review the artwork itself to determine whether or not the nature and style of the artwork is appropriate to the architecture and site.

3) Determine whether or not the proposed artwork is appropriate in scale for the overall development.

4) Review the location of the artwork for visibility to the public.

The purpose of this memo is to provide information about the proposed artwork and to solicit Arts Commission approval of the final design. Under the Art in Private Development Ordinance, the Arts Commission is authorized to make a final determination of the proposed artwork. The Commission's decision may be appealed by the developer to the City Council.

## Discussion

**Project Location:** This project is located at 615 Tasman at the intersection of Tasman Drive and Fair Oaks Avenue, on the northeast corner. (Please refer to Attachment A –

Street Map.) The site is bordered on all sides by residential housing with a small commercial center located just west of the site across Fair Oaks Avenue. The site is expected to have a high volume of both pedestrian and vehicular traffic because the site will house the only grocery store in this largely residential area. Additionally, the site is adjacent to the Fair Oaks Light Rail Station, with tracks running along both the southern and western edges of the site.

**Project:** The property owner, Essex Property Trust, is constructing a mixed use development on this 6.45 acre site. (Please refer to Attachment B – Site Plan.) Approved plans include two five-story buildings erected above a single-story sub-surface parking area. The two buildings will be connected by a two-story building that will be the leasing/sales office for the residential units and that will serve as a common area for the residents living on site. Please refer to Attachment C – Computer Rendering of Artwork in its Location as seen from Tasman Drive.)

The first, or ground, floor of the buildings will have 51,308 square feet of commercial storefronts. Stories two through five will house 290 residential condominium/apartment units totaling 315,597 square feet. The site will also have a single story, stand-alone, 15,000 square foot full service Fresh & Easy grocery store located at the main corner of the site.

The two buildings will be situated in an "L" shape towards the back of the site with a fire lane or driveway running between the back edges of the site and the buildings. There will be a vehicular entrance to each end of these driveways, which will be utilized by residents accessing the private sub-surface parking areas. There will be two additional public driveways on either side of the Fresh & Easy grocery store that will allow vehicles to access the commercial portion of the site from both Fair Oaks Avenue and Tasman Drive.

**Artwork Location:** The selected location for the artwork is in a large vehicular turnaround towards the interior of the site. (Please refer to Attachment D – Site Plan Showing artwork location.) The turnaround is situated at the intersection of the two public driveways, directly in front of the two-story common building. This location was selected because the frontages along Tasman Drive and Fair Oaks Avenue offered no viable locations for the placement of art, but the turnaround is centrally located on the site and there will be clear view corridors from both public entrances to the site, as well as the light rail station. (Please refer back to Attachment C – Computer Rendering of Artwork Location as seen from Tasman Drive and Attachment E – Computer Rendering of Artwork as seen from Fair Oaks Avenue.)

**Selected Artist:** The selected artist for this project is Troy Pillow. (Please refer to Attachment F – Artist's Resume.) Mr. Pillow is a current resident of Seattle, Washington, and has been actively sculpting and exhibiting for over ten years. His work has been commissioned nationally, including local sculpture commissions by El Camino Hospital in Mountain View, Alvarado Place in Union City, and Sutter Health in Fairfield.

Mr. Pillow also has recently installed two large-scale sculptures for the Intuitive Surgical project located at 1250 Kifer Road in Sunnyvale. The Intuitive project was reviewed and approved by the Arts Commission at their June 16, 2010 meeting.

**Artwork Proposal:** The proposed artwork for the 615 Tasman Drive project is a large scale, sculptural water fountain. (Please refer to Attachment G – Computer Elevation of Sculpture Fountain.) The fountain design will consist of a 13' tall sculpture set on a 3' tall by 3' diameter concrete base. The base will sit inside of a 15' diameter splash pool also constructed from Concrete. The finish of the concrete will be textured and colored to complement the building surfaces and overall aesthetic of the project.

The sculpture will be constructed of stainless steel, but it will be treated with a ferric nitrate patina which will create a reddish brown color. (Please refer to Attachment H – Computer Rendering of Sculpture Fountain.) The top tier of the sculpture will consist of a 3' diameter bowl supported by three arced arms. The bowl will fill with water which will spill over the lip of the bowl in three spots. The cascading water will be caught by a second larger bowl that is 7' in diameter and that is also supported by three similarly arced arms. The water from this bowl will also flow over the lip of the bowl in three spots cascading down into the recessed splash pool.

Each of the arced support arms will be inset with stacked glass. (Please refer to Attachment I – Example of a Previous Artwork with Stacked Glass.) The artist chose to incorporate the stacked glass because it created a contemporary feel that related back to the water theme. The overall design has a Mediterranean feel that complements the project architecture.

**Lighting:** The developer is proposing to wash the sculpture in a soft lighting from lights installed out side of the base footprint at ground level. Additional up lights will be installed close to the base lighting the center of the sculpture and illuminating the cascading water from behind while highlighting the sculpture's arced arms, bowls and stacked glass insets giving the sculpture a dramatic presence at night.

**Maintenance:** The sculpture maintenance will require a "brushing" as needed to remove any built up deposits or algae. If the owner chooses, the sculpture can be waxed once a year or as needed to maintain a "satin" surface. This treatment is not necessary for the integrity of the sculpture and is only for aesthetic purposes. The water and pump maintenance and schedule will be set by the developer or contracted to a maintenance company.

**Corporate Logo:** Staff has determined that the artwork bears no resemblance to the developer's, architect's or tenants' logos.

## Staff Recommendation

Although the renderings and drawings that were submitted by the developer for the proposed artwork do not accurately represent the relationship and perspective of the artwork to the site, (in particular the site corridors from the street) staff has visited the site and concludes that the scale of the artwork and the location of the artwork are both appropriate for this project. The proposed artwork meets the criteria outlined in the Art in Private Development regulation; and, therefore, staff recommends that the Arts Commission approve the artwork as it is proposed.

## Commission Action

The Commission is being asked to take action on the proposed artwork and its location. The Commission may vote to:

1. Approve the proposed artwork as it is proposed.
2. Not approve the proposed artwork.

cc: Robert A. Walker, Assistant City Manager

Attachment A: Street Map

Attachment B: Site Map

Attachment C: Computer Rendering of the Artwork Location as seen from Tasman Drive

Attachment D: Site Map Showing Artwork Location

Attachment E: Computer Rendering of the Artwork Location as seen from Fair Oaks Ave

Attachment F: Artist's Resume

Attachment G: Computer Elevation of Proposed Sculpture Fountain

Attachment I: Computer Rendering of the Proposed Sculpture Fountain

**Attachment A**

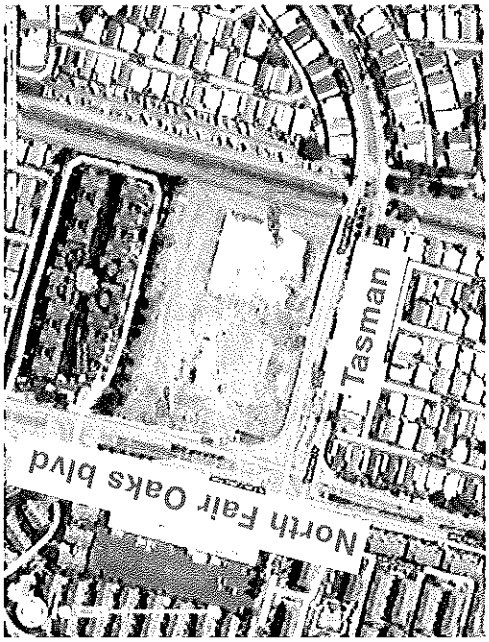


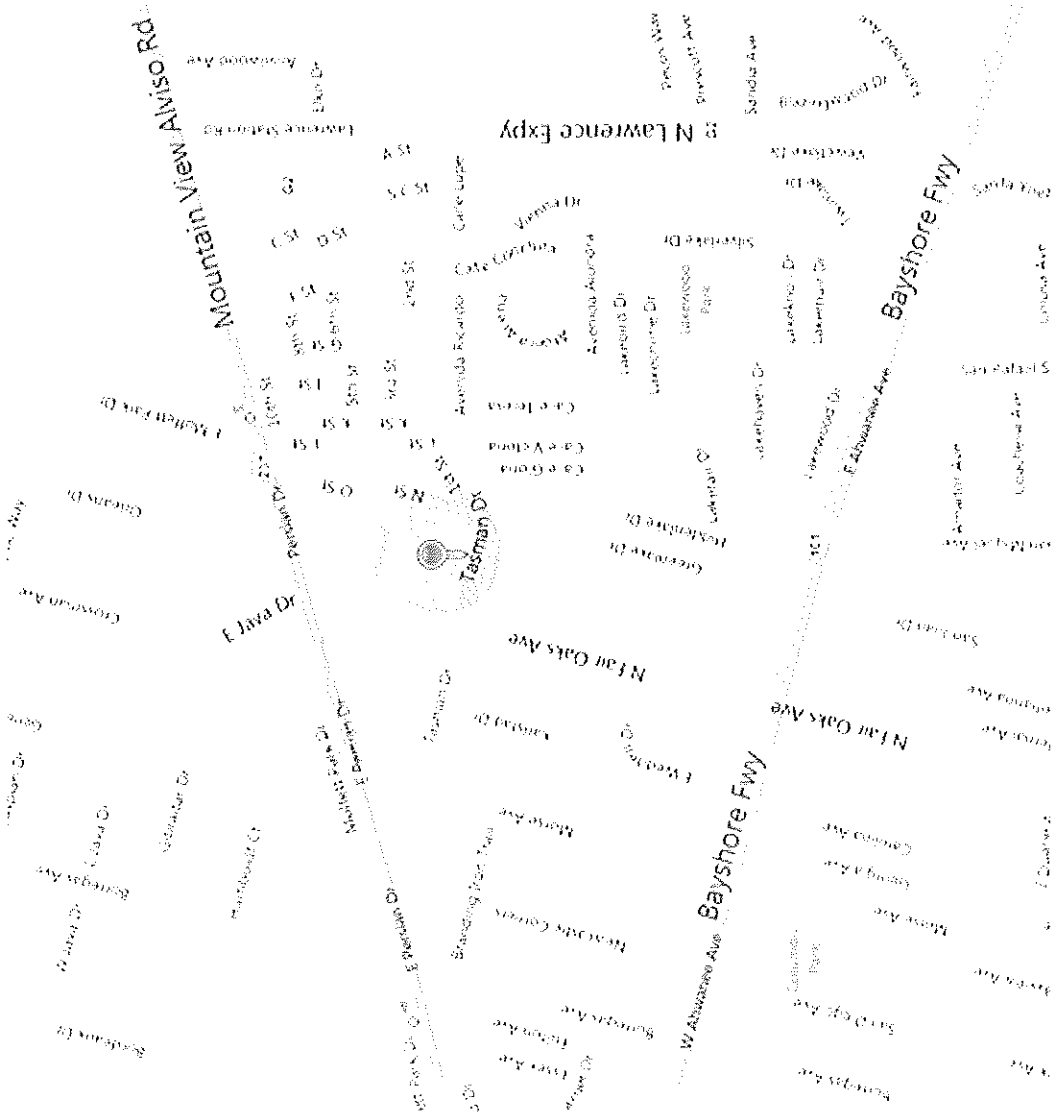


Via - 615 Tasman Public Art

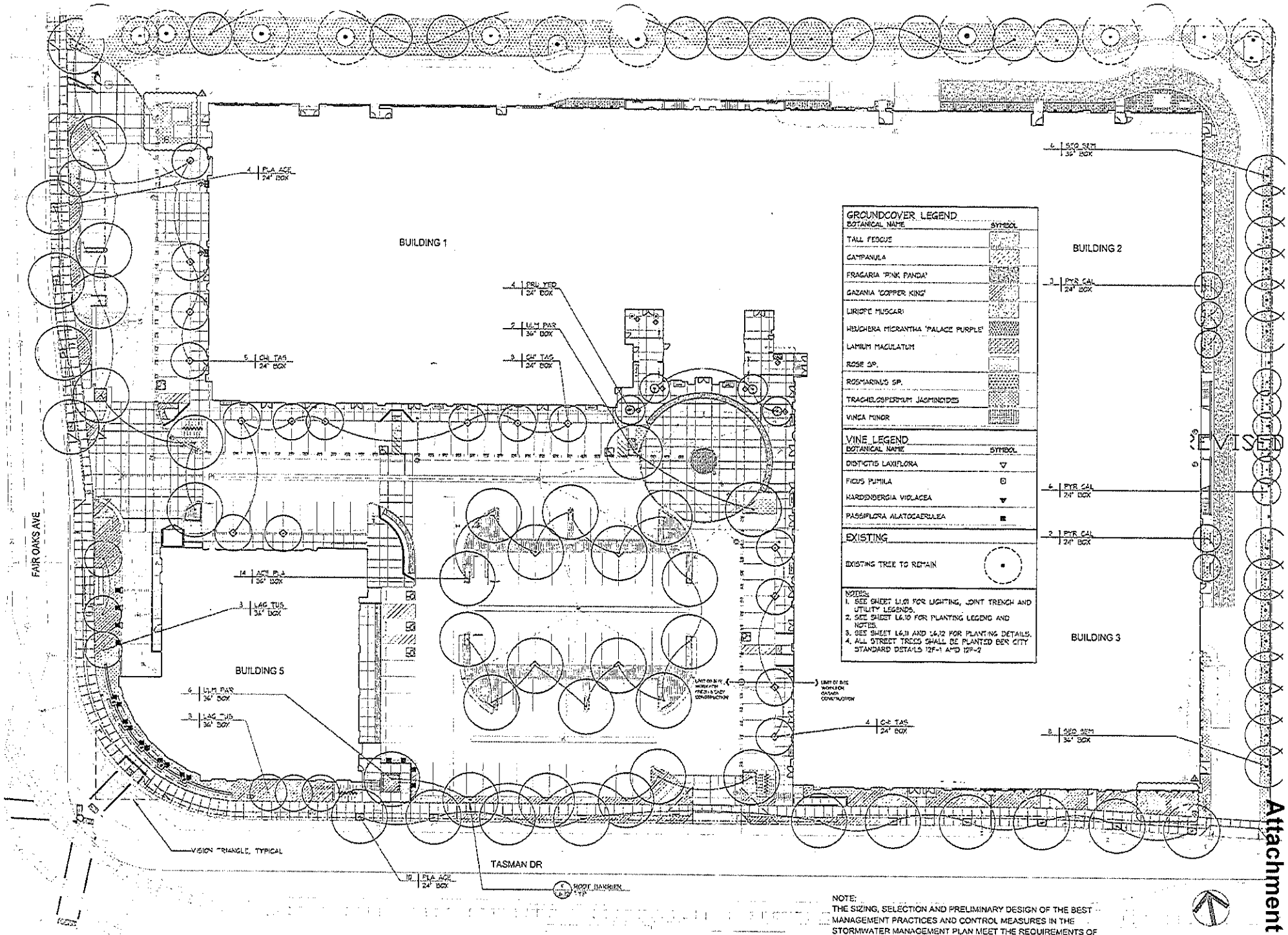


NOTE:
THE SIZING, SELECTION AND PRELIMINARY DESIGN OF THE BEST MANAGEMENT PRACTICES AND CONTROL MEASURES IN THE STORMWATER MANAGEMENT PLAN MEET THE REQUIREMENTS OF SUNNYVALE MUNICIPAL CODE 12.60. ENGEO'S SERVICES HAVE BEEN LIMITED TO REVIEW FOR CONFORMANCE WITH THE STORMWATER MANAGEMENT PLAN ONLY.

Attachment B

Attachment C

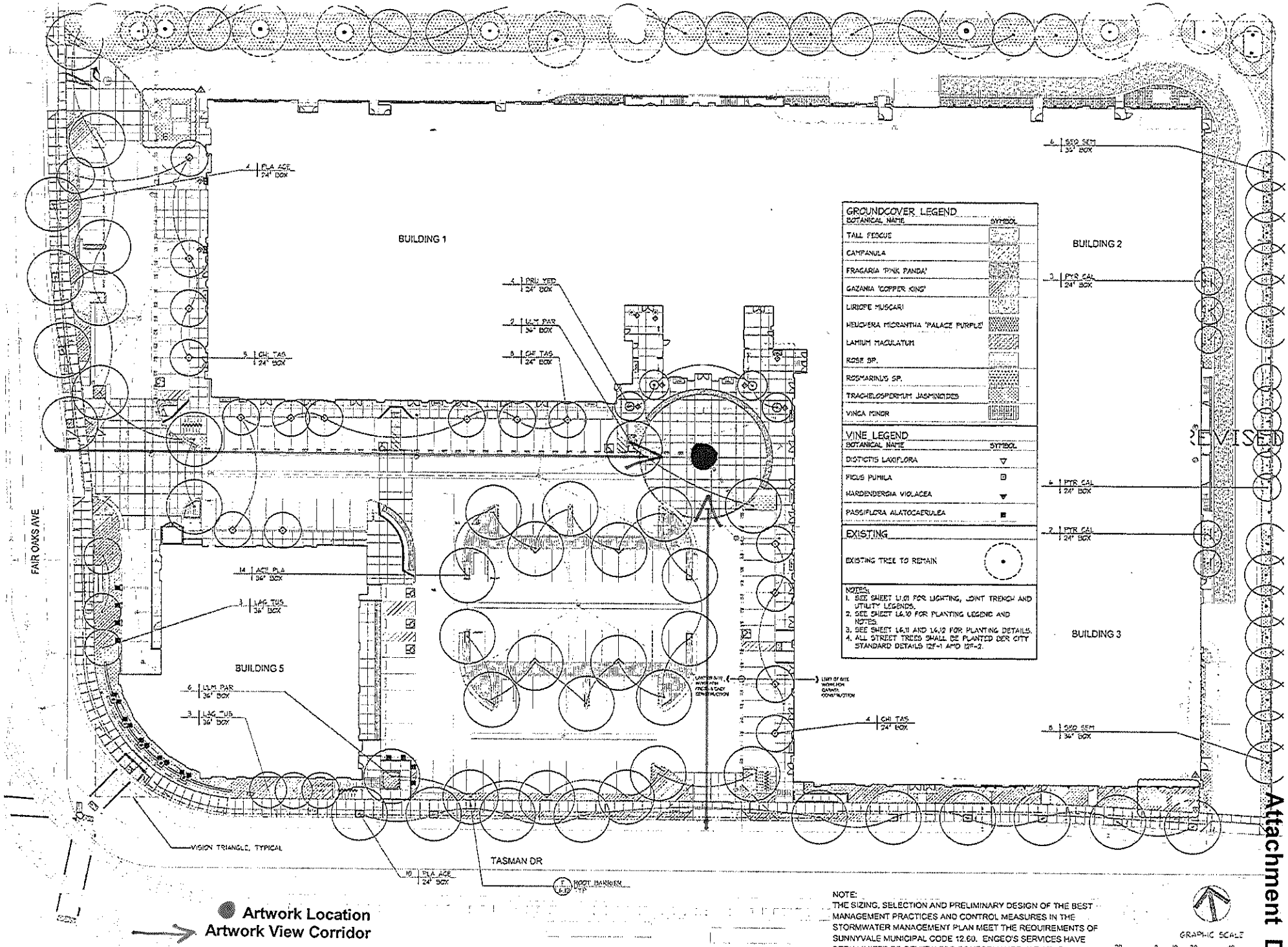


Attachment D

**Attachment E**

# TROY PILLOW

**Born**

Denver, Colorado, 1/19/71

**Exhibitions**

2009 Downtown sculpture Exhibit, Everett, WA
2008 Atlanta Botanical Garden, Sculpture in motion
2007 Maryhill Museum of Art, Sculpture Invitational
2006 Bellevue Sculpture Exhibition, Bellevue, Washington
2006 Donna Seager Gallery, San Rafael, California
2005 Shidoni, Tesuque, New Mexico
2005 San Francisco International Art Expo
2004 CFA Gallery, San Anselmo, California
2004 A New Leaf Gallery, Berkeley, California
2003 Art and Soul Gallery, Boulder, Colorado
2001 Charles Kristen Galleries, Denver, Colorado

**Gallery Affiliations**

A New Leaf Gallery, Sonoma, California
Anderson Galleries, Locust Valley, New York
Donna Seager Gallery, San Rafael, California
Iwolk Gallery, St. Helena, California
Pacini Lubel, Seattle, WA
Shidoni Gallery, Tesuque, New Mexico
Westcott Bay Sculpture Park, Roche Harbor, WA
Brett Wesley Gallery, Las Vegas, NV

**Commissions**

2010 Intuitive Surgical, Sunnyvale, CA
2010 King County Libraries, Burien, WA
2010 Art in Public Places, Bend, OR
2010 Aspira, Seattle, WA
2010 Avalon Bay Communities, Bellevue, WA
2009 BRE Properties, Bellevue, WA
2009 El Camino Hospital, Mountianview, CA
2009 Trammel Crow Residential, Redmond, WA
2008 Art in Public Places, Bend, OR
2008 Wallace Properties, Seattle, WA
2007 Salt Lake City, Nine muses project, UT
2006 St. Josephs Hospital, Pheonix, Arizona
2006 Alvarado Place, Union City, California
2006 Trammel Crow Residential, Kirkland, Washington
- Boulevard
- State Street

2004 Sutter Health, Fairfield, California

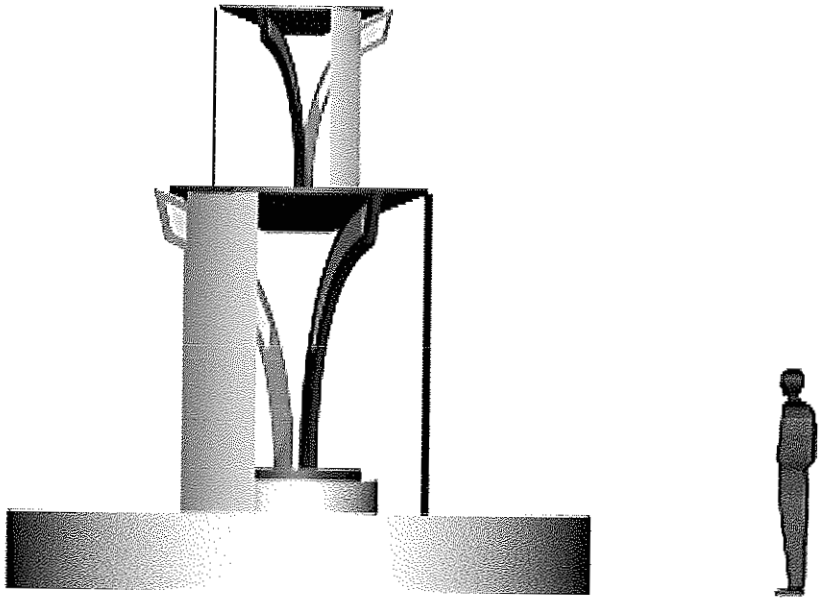

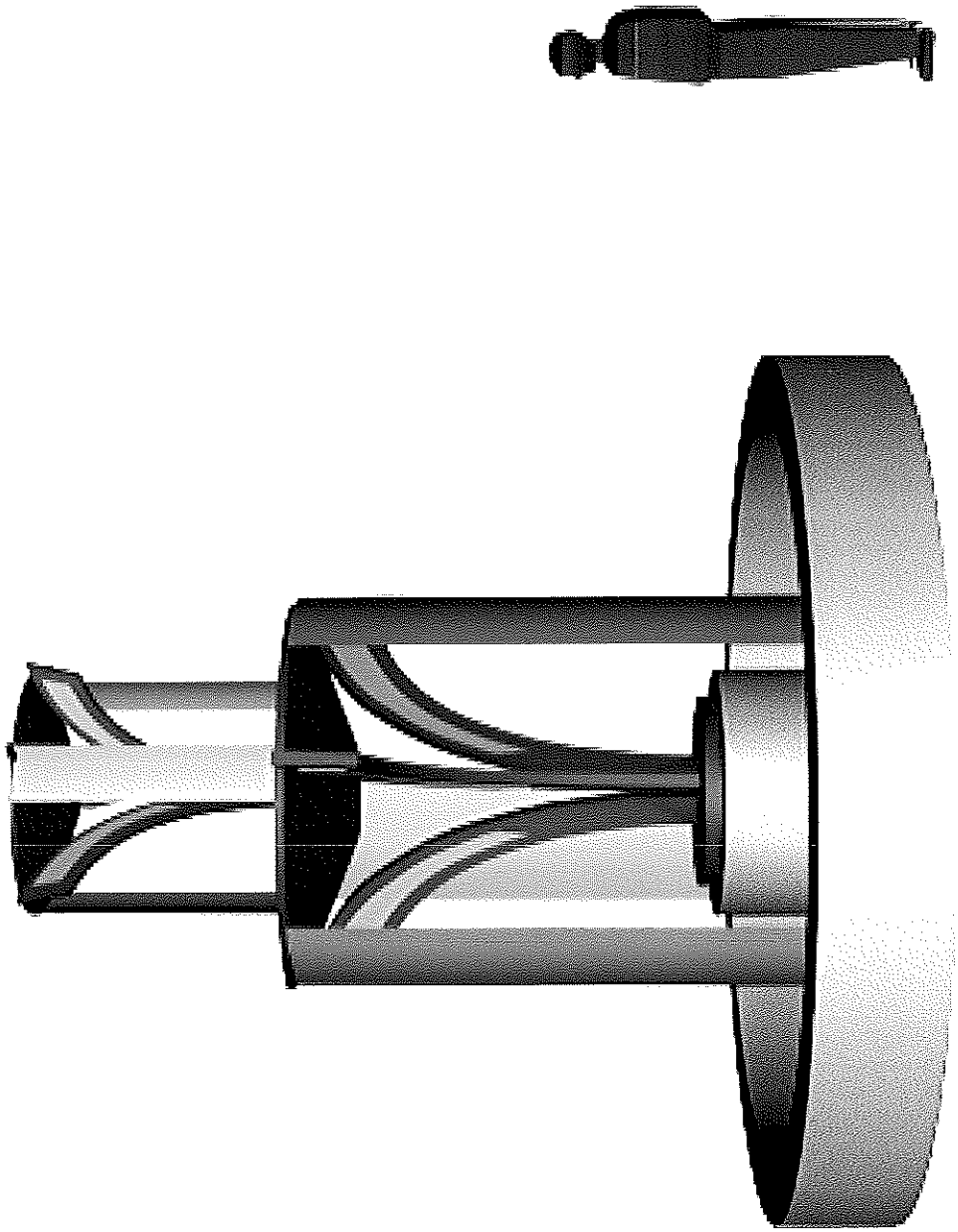

Troy Pillow

Example of stacked glass

[redacted]

Attachment I

**PUBLIC HEARING**
**ITEM 3**

**BRE Properties, Town & Country**
**(discussion)**
(intentionally omitted)

PUBLIC HEARING
ITEM 4

# City of Sunnyvale

# 2010 Code of Ethics and Conduct for Elected and Appointed Officials

*"Conduct is three-fourths of our life and its largest concern."*
*-- Matthew Arnold*

## Table of Contents


| Title | Page No. |
|---|---|
| A. Ethics | 3 |
| B. Conduct | 5 |
| 1. Elected and Appointed Officials' Conduct with One Another | 5 |
| 2. Elected and Appointed Officials' Conduct with City Staff | 7 |
| 3. Elected and Appointed Officials' Conduct with the Public | 9 |
| 4. Council Conduct with Other Public Agencies | 11 |
| 5. Council Conduct with Boards and Commissions | 11 |
| 6. Conduct with the Media | 12 |
| C. Sanctions | 12 |
| D. Principles of Proper Conduct | 14 |
| E. Checklist for Monitoring Conduct | 15 |
| F. Glossary of Terms | 15 |
| G. Implementation | 15 |


*For ease of reference in the Code of Ethics and Conduct, the term "member" refers to any member of the Sunnyvale City Council or the City's boards and commissions established by the City Charter, City Ordinance or Council policy.*

**Policy Purpose**

The Sunnyvale City Council has adopted a Code of Ethics and Conduct for members of the City Council and the City's boards and commissions to assure public confidence in the integrity of local government and its effective and fair operation.

## A. ETHICS

The citizens and businesses of Sunnyvale are entitled to have fair, ethical and accountable local government which has earned the public's full confidence for integrity. In keeping with the City of Sunnyvale Commitment to Excellence, the effective functioning of democratic government therefore requires that:

- public officials, both elected and appointed, comply with both the letter and spirit of the laws and policies affecting the operations of government;
- public officials be independent, impartial and fair in their judgment and actions;
- public office be used for the public good, not for personal gain; and
- public deliberations and processes be conducted openly, unless legally confidential, in an atmosphere of respect and civility.

To this end, the Sunnyvale City Council has adopted a Code of Ethics and Conduct for members of the City Council and of the City's boards and commissions to assure public confidence in the integrity of local government and its effective and fair operation. The Ethics section of the City's Code of Ethics and Conduct provides guidance on ethical issues and questions of right and wrong.

1. Act in the Public Interest. Recognizing that stewardship of the public interest must be their primary concern, members will work for the common good of the people of Sunnyvale and not for any private or personal interest, and they will assure fair and equal treatment of all persons, claims and transactions coming before the Sunnyvale City Council, boards and commissions.

2. Comply with both the spirit and the letter of the Law and City Policy. Members shall comply with the laws of the nation, the State of California and the City of Sunnyvale in the performance of their public duties. These laws include, but are not limited to: the United States and California constitutions; the Sunnyvale City Charter; laws pertaining to conflicts of interest, election campaigns, financial disclosures, employer responsibilities, and open processes of government; and City ordinances and policies.

3. Conduct of Members. The professional and personal conduct of members must be above reproach and avoid even the appearance of impropriety. Members shall refrain from abusive conduct, personal charges or verbal attacks upon the character or motives of other members of Council, boards and commissions, the staff or public.

4. Respect for Process. Members shall perform their duties in accordance with the processes and rules of order established by the City Council and board and commissions governing the deliberation of public policy issues, meaningful involvement of the public, and implementation of policy decisions of the City Council by City staff.

5. Conduct of Public Meetings. Members shall prepare themselves for public issues; listen courteously and attentively to all public discussions before the body; and focus on the business at hand. They shall refrain from interrupting other speakers; making personal comments not germane to the business of the body; or otherwise interfering with the orderly conduct of meetings.

*For ease of reference in the Code of Ethics and Conduct, the term "member" refers to any member of the Sunnyvale City Council or the City's boards and commissions established by the City Charter, City Ordinance or Council policy.*

6. Decisions Based on Merit. Members shall base their decisions on the merits and substance of the matter at hand, rather than on unrelated considerations.

7. Communication. Members shall publicly disclose substantive information that is relevant to a matter under consideration by the Council or boards and commissions, which they may have received from sources outside of the public decision-making process.

8. Conflict of Interest. In order to assure their independence and impartiality on behalf of the common good, members shall not use their official positions to influence government decisions in which they have a material financial interest, or where they have an organizational responsibility or personal relationship which may give the appearance of a conflict of interest. In accordance with the law, members shall disclose investments, interests in real property, sources of income, and gifts; and they shall abstain from participating in deliberations and decision-making where conflicts may exist.

9. Gifts and Favors. Members shall not take any special advantage of services or opportunities for personal gain, by virtue of their public office, that are not available to the public in general. They shall refrain from accepting any gifts, favors or promises of future benefits which might compromise their independence of judgment or action or give the appearance of being compromised.

10. Confidential Information. Members shall respect the confidentiality of information concerning the property, personnel or affairs of the City. They shall neither disclose confidential information without proper legal authorization, nor use such information to advance their personal, financial or other private interests.

11. Use of Public Resources. Members shall not use public resources not available to the public in general, such as City staff time, equipment, supplies or facilities, for private gain or personal purposes.

12. Representation of Private Interests. In keeping with their role as stewards of the public interest, members of Council shall not appear on behalf of the private interests of third parties before the Council or any board, commission or proceeding of the City, nor shall members of boards and commissions appear before their own bodies or before the Council on behalf of the private interests of third parties on matters related to the areas of service of their bodies.

13. Advocacy. Members shall represent the official policies or positions of the City Council, board or commission to the best of their ability when designated as delegates for this purpose. When presenting their individual opinions and positions, members shall explicitly state they do not represent their body or the City of Sunnyvale, nor will they allow the inference that they do. Councilmembers and board and commission members have the right to endorse candidates for all Council seats or other elected offices. It is inappropriate to mention or display endorsements during Council meetings, board/commission meetings, or other official City meetings.

14. Policy Role of Members. Members shall respect and adhere to the council-manager structure of Sunnyvale City government as outlined by the Sunnyvale City Charter. In this structure, the City Council determines the policies of the City with the advice, information and analysis provided by the public, boards and commissions, and City staff. Except as provided by the City Charter, members therefore shall not interfere with the administrative functions of the City or the professional duties of City staff; nor shall they impair the ability of staff to implement Council policy decisions.

*For ease of reference in the Code of Ethics and Conduct, the term "member" refers to any member of the Sunnyvale City Council or the City's boards and commissions established by the City Charter, City Ordinance or Council policy.*

15. Independence of boards and commissions. Because of the value of the independent advice of boards and commissions to the public decision-making process, members of Council shall refrain from using their position to unduly influence the deliberations or outcomes of board and commission proceedings.

16. Positive Work Place Environment. Members shall support the maintenance of a positive and constructive work place environment for City employees and for citizens and businesses dealing with the City. Members shall recognize their special role in dealings with City employees to in no way create the perception of inappropriate direction to staff.

## B. CONDUCT

The Conduct section of the City's Code of Ethics and Conduct is designed to describe the manner in which Councilmembers and board and commission members should treat one another, City staff, constituents, and others they come into contact with in representing the City of Sunnyvale. It reflects the work of a Council Policy and Protocol Subcommittee that was charged with defining more clearly the behavior, manners, and courtesies that are suitable for various occasions. The Subcommittee also considered a wide variety of policy changes and clarifications designed to make public meetings and the process of governance run more smoothly.

The constant and consistent theme through all of the conduct guidelines is "respect." Councilmembers experience huge workloads and tremendous stress in making decisions that could impact thousands of lives. Despite these pressures, elected and appointed officials are called upon to exhibit appropriate behavior at all times. Demonstrating respect for each individual through words and actions is the touchstone that can help guide Councilmembers and board and commission members to do the right thing in even the most difficult situations.

### 1. Elected and Appointed Officials' Conduct with One Another

*"In life, courtesy and self-possession, and in the arts, style, are the sensible impressions of the free mind, for both arise out of a deliberate shaping of all things and from never being swept away, whatever the emotion, into confusion or dullness."*
*-- William Butler Yeats*

Elected and appointed officials are composed of individuals with a wide variety of backgrounds, personalities, values, opinions, and goals. Despite this diversity, all have chosen to serve in public office in order to preserve and protect the present and the future of the community. In all cases, this common goal should be acknowledged even though individuals may "agree to disagree" on contentious issues.

#### 1(a). In Public Meetings

*Use formal titles*
Elected and appointed officials should refer to one another formally during public meetings, such as Mayor, Vice Mayor, Chair, Commissioner or Councilmember followed by the individual's last name.

*Practice civility and decorum in discussions and debate*
Difficult questions, tough challenges to a particular point of view, and criticism of ideas and information are legitimate elements of a free democracy in action. This does not allow, however, public officials to make belligerent, personal, impertinent, slanderous, threatening, abusive, or disparaging comments. No shouting or physical actions that could be construed as threatening will be tolerated.

*For ease of reference in the Code of Ethics and Conduct, the term "member" refers to any member of the Sunnyvale City Council or the City's boards and commissions established by the City Charter, City Ordinance or Council policy.*

*Honor the role of the chair in maintaining order*
It is the responsibility of the chair to keep the comments of members on track during public meetings. Members should honor efforts by the chair to focus discussion on current agenda items. If there is disagreement about the agenda or the chair's actions, those objections should be voiced politely and with reason, following procedures outlined in parliamentary procedure.

*Avoid personal comments that could offend other members*
If a member is personally offended by the remarks of another member, the offended member should make notes of the actual words used and call for a "point of personal privilege" that challenges the other member to justify or apologize for the language used. The chair will maintain control of this discussion.

*Demonstrate effective problem-solving approaches*
Members have a public stage to show how individuals with disparate points of view can find common ground and seek a compromise that benefits the community as a whole.

Outside of official board or commission meetings, individual board and commission members are not authorized to represent the City or their board or commission unless specifically designated by the Council or the board or commission to do so for a particular purpose. In private settings, board and commission members may communicate at any time and on any subject with individual members of the City Council, and may express to them individual viewpoints and opinions. In public, however, all members shall represent the official policies or positions of their board or commission, with the following exception. During a Council public hearing on any item addressed by the board or commission, any member may speak under standard time limits, but shall indicate whether their testimony represents an official position (majority opinion) or a minority opinion of the board/commission to which they belong. The chair shall represent the majority view of the board or commission, but may report on any minority views as well, including his or her own. When an official board or commission position differs from staff's recommendation on a particular policy issue, then at the Mayor's discretion additional time may be provided to the chair of the board or commission (or his/her designee) to explain the position of the board/commission or to rebut statements made by staff or the public. If new information is brought to light during a public hearing which was not shared previously with the board or commission, the Mayor may allow the board or commission chair to respond. If the Council deems the new information sufficient to warrant additional study, then by majority vote Council may remand the issue back to the board or commission for further study prior to taking other action itself.

Individual opinions and positions may be expressed by board and commission members regarding items that have not come before the particular board/commission to which they belong. When presenting their individual opinions and positions, members shall explicitly state they do not represent their body or the City of Sunnyvale, nor will they allow the inference that they do.

Although a board or commission may disagree with the final decision the Council makes, the board or commission shall not act in any manner contrary to the established policy adopted by the Council.

**1(b). In Private Encounters**

*Continue respectful behavior in private*
The same level of respect and consideration of differing points of view that is deemed appropriate for public discussions should be maintained in private conversations.

*Be aware of the insecurity of written notes, voicemail messages, and E-mail*
Technology allows words written or said without much forethought to be distributed wide and far. Would you feel comfortable to have this note faxed to others? How would you feel if this voicemail message were

played on a speaker phone in a full office? What would happen if this E-mail message were forwarded to others? Written notes, voicemail messages and e-mail should be treated as potentially "public" communication.

*Even private conversations can have a public presence*
Elected and appointed officials are always on display – their actions, mannerisms, and language are monitored by people around them that they may not know. Lunch table conversations will be eavesdropped upon, parking lot debates will be watched, and casual comments between individuals before and after public meetings noted.

In private, board and commission members may communicate at any time and on any subject with the City Council, and may express to Council individual viewpoints and opinions.

## 2. Elected and Appointed Officials' Conduct with City Staff

*"Never let a problem become an excuse."*
*-- Robert Schuller*

Governance of a City relies on the cooperative efforts of elected officials, who set policy, appointed officials who advise the elected, and City staff who implements and administers the Council's policies. Therefore, every effort should be made to be cooperative and show mutual respect for the contributions made by each individual for the good of the community.

*Treat all staff as professionals*
Clear, honest communication that respects the abilities, experience, and dignity of each individual is expected. Poor behavior towards staff is not acceptable.

*Member questions/inquiries to City staff*

1. General. Council and board/commission communications with City staff should be limited to normal City business hours unless the circumstances warrant otherwise. Responses to Council questions posed outside of normal business hours should be expected no earlier than the next business day.

2. Routine Requests for Information and Inquiries. Members may contact staff directly for information made readily available to the general public on a regular basis (e.g., "What are the library's hours of operation?" or "How does one reserve a tee time at the golf course?"). Under these circumstances staff shall treat the member no differently than they would the general public, and the member shall not use their elected status to secure preferential treatment. The city manager does not need to be advised of such contacts.

3. Non-Routine Requests for Readily Available Information. Members may also contact staff directly for easily retrievable information not routinely requested by the general public so long as it does not require staff to discuss the issue or express an opinion (e.g., "How many traffic lights are there in the City?" or "Under what circumstances does the City lower its flags to half mast?")

4. Non-Routine Requests Requiring Special Effort. Any member request or inquiry that requires staff to compile information that is not readily available or easily retrievable and/or that requests staff to express an opinion (legal or otherwise) must be directed to the city manager, or to the city attorney, as appropriate (e.g., "How many Study Issues completed over the past five years have required 500 or more hours of staff time?", or "What is the logic behind the City's sign ordinances affecting businesses along El Camino Real?"). The city manager (or city attorney as appropriate) shall be responsible for

distributing such requests to his/her staff for follow-up. Responses to such requests shall be copied to all Councilmembers (if originating from a Councilmember), relevant board or commission members (if originating from a board or commission member), the city manager, the city attorney as appropriate and affected department directors.

5. Meeting Requests. Any member request for a meeting with staff must be directed to the city manager or city attorney, as appropriate.

6. Public Safety Restrictions. Under certain circumstances, requests for information regarding operations or personnel of the Department of Public Safety may be legally restricted. Applicable statutes include: The Peace Officers' Procedural Bill of Rights (California Government Code Section 3300, et seq.), Confidentiality of Peace Officer Records (California Penal Code Section 832.5-7), and a number of exceptions to the California Public Records Act, defined in Government Code Section 6254. Providing information in response to such requests could violate the law, and might also violate due process rights that have been defined for peace officers in the State of California. Accordingly, it shall be the policy of the City of Sunnyvale to strictly comply with all applicable legal authorities governing the release of Department of Public Safety information and records.

*Do not disrupt City staff from their jobs*
Elected and appointed officials should not disrupt City staff while they are in meetings, on the phone, or engrossed in performing their job functions in order to have their individual needs met. Do not attend City staff meetings unless requested by staff – even if the elected or appointed official does not say anything, his or her presence implies support, shows partiality, intimidates staff, and hampers staff's ability to do their job objectively.

*Never publicly criticize an individual employee*
Elected and appointed officials should never express concerns about the performance of a City employee in public, to the employee directly, or to the employee's manager. Comments about staff performance should only be made to the city manager through private correspondence or conversation. Comments about staff in the office of the city attorney should be made directly to the city attorney. Appointed officials should make their comments regarding staff to the city manager or the Mayor.

*Do not get involved in administrative functions*
Elected and appointed officials must not attempt to influence City staff on the making of appointments, awarding of contracts, selecting of consultants, processing of development applications, or granting of City licenses and permits. [See Code of Ethics] The Sunnyvale City Charter, Section 807, also contains information about the prohibition of Council interference in administrative functions.

*Check with City staff on correspondence before taking action*
Before sending correspondence, Councilmembers should check with City staff to see if an official City response has already been sent or is in progress. Board and commission members shall not send correspondence except as authorized under the City's policies governing volunteers. (Council Policy 7.2.19, Boards and Commissions.)

*Limit requests for staff support*
Routine secretarial support will be provided to all Councilmembers. The Council Executive Assistant opens all mail for Councilmembers, unless a Councilmember requests other arrangements. Mail addressed to the Mayor is reviewed first by the city manager who notes suggested action and/or follow-up items.

*For ease of reference in the Code of Ethics and Conduct, the term "member" refers to any member of the Sunnyvale City Council or the City's boards and commissions established by the City Charter, City Ordinance or Council policy.*

Requests for additional staff support – even in high priority or emergency situations – should be made to the city manager who is responsible for allocating City resources in order to maintain a professional, well-run City government.

*Do not solicit political support from staff*
Elected and appointed officials should not solicit any type of political support (financial contributions, display of posters or lawn signs, name on support list, etc.) from City staff. City staff may, as private citizens with constitutional rights, support political candidates but all such activities must be done away from the workplace.

## 3. Elected and Appointed Officials' Conduct with the Public

*"If a man be gracious and courteous to strangers, it shows he is a citizen of the world, and that his heart is no island cut off from other lands, but a continent that joins to them."*
*-- Francis Bacon*

### 3(a). In Public Meetings

Making the public feel welcome is an important part of the democratic process. No signs of partiality, prejudice or disrespect should be evident on the part of individual members toward an individual participating in a public forum. Every effort should be made to be fair and impartial in listening to public testimony.

*Be welcoming to speakers and treat them with care and gentleness. While questions of clarification may be asked, the official's primary role during public testimony is to listen.*
"I give many public presentations so standing up in front of a group and using a microphone is not new to me. But I found that speaking in front of Council was an entirely different experience. I was incredibly nervous and my voice was shaking. I think the reason was because the issue was so personal to me. The Council was going to take a vote that would affect my family's daily life and my home. I was feeling a lot of emotion. The way that Council treats people during public hearings can do a lot to make them relax or to push their emotions to a higher level of intensity."

*Be fair and equitable in allocating public hearing time to individual speakers.*
"The first thing the Mayor said to me was to be brief because the meeting was running late and the Council was eager to go home. That shouldn't be my problem. I'm sorry my item was at the end of the agenda and that there were a lot of speakers, but it is critically important to me and I should be allowed to say what I have to say and believe that the Council is listening to me."

The chair will determine and announce limits on speakers at the start of the public hearing process. Questions should not be asked for the express purpose of allowing one speaker to evade the time limit imposed on all others (e.g., "Was there something else you wanted to say?"). Generally, each speaker will be allocated three minutes with applicants and appellants or their designated representatives allowed ten. If many speakers are anticipated, the chair may shorten the time limit and/or ask speakers to limit themselves to new information and points of view not already covered by previous speakers.

No speaker will be turned away unless he or she exhibits inappropriate behavior. Each speaker may only speak once during the public hearing unless the chair requests additional clarification later in the process. After the close of the public hearing, no more public testimony will be accepted unless the chair reopens the public hearing for a limited and specific purpose.

*For ease of reference in the Code of Ethics and Conduct, the term "member" refers to any member of the Sunnyvale City Council or the City's boards and commissions established by the City Charter, City Ordinance or Council policy.*

*Give the appearance of active listening*
It is disconcerting to speakers to have members not look at them when they are speaking. It is fine to look down at documents or to make notes, but reading for a long period of time or gazing around the room gives the appearance of disinterest. Be aware of facial expressions, especially those that could be interpreted as "smirking," disbelief, anger or boredom.

*Maintain an open mind*
Members of the public deserve an opportunity to influence the thinking of elected and appointed officials. To express an opinion or pass judgment prior to the close of a public hearing casts doubt on a member's ability to conduct a fair review of the issue. This is particularly important when officials are serving in a quasi-judicial capacity.

*Ask for clarification, but avoid debate and argument with the public*
Only the chair – not individual members – can interrupt a speaker during a presentation. However, a member can ask the chair for a point of order if the speaker is off the topic or exhibiting behavior or language the member finds disturbing.

If speakers become flustered or defensive by questions, it is the responsibility of the chair to calm and focus the speaker and to maintain the order and decorum of the meeting. Questions by members to the public testifying should seek to clarify or expand information. It is never appropriate to belligerently challenge or belittle the speaker. Members' personal opinions or inclinations about upcoming votes should not be revealed until after the public hearing is closed.

*No personal attacks of any kind, under any circumstance*
Members should be aware that their body language and tone of voice, as well as the words they use, can appear to be intimidating or aggressive.

*Follow parliamentary procedure in conducting public meetings*
The city attorney serves as advisory parliamentarian for the City and is available to answer questions or interpret situations according to parliamentary procedures. The chair, subject to the appeal of the full Council or board/commission makes final rulings on parliamentary procedure.

**3(b). In Unofficial Settings**

*Make no promises on behalf of the Council, board/commission or City*
Members will frequently be asked to explain a Council or board/commission action or to give their opinion about an issue as they meet and talk with constituents in the community. It is appropriate to give a brief overview of City policy and to refer to City staff for further information. It is inappropriate to overtly or implicitly promise Council or board/commission action, or to promise City staff will do something specific (fix a pothole, remove a library book, plant new flowers in the median, etc.).

*Make no personal comments about other members*
It is acceptable to publicly disagree about an issue, but it is unacceptable to make derogatory comments about other members, their opinions and actions.

*Remember that despite its impressive population figures, Sunnyvale is a small town at heart*
Members are constantly being observed by the community every day that they serve in office. Their behaviors and comments serve as models for proper deportment in the City of Sunnyvale. Honesty and respect for the dignity of each individual should be reflected in every word and action taken by members, 24 hours a day, seven days a week. It is a serious and continuous responsibility.

*For ease of reference in the Code of Ethics and Conduct, the term "member" refers to any member of the Sunnyvale City Council or the City's boards and commissions established by the City Charter, City Ordinance or Council policy.*

## 4. Council Conduct with Other Public Agencies

*"Always do right. This will gratify some people and astonish the rest."*
*-- Mark Twain*

*Be clear about representing the City or personal interests*
When representing the City, the Councilmember must support and advocate the official City position on an issue, not a personal viewpoint. Outside of official board or commission meetings, board and commission members are not authorized to represent the City or their board or commission unless specifically designated by the Council or the board or commission to do so for a particular purpose.

When representing another organization whose position is different from the City, the Councilmember should withdraw from voting on the issue if it significantly impacts or is detrimental to the City's interest. Councilmembers should be clear about which organizations they represent and inform the Mayor and Council of their involvement.

*Correspondence also should be equally clear about representation*
City letterhead may be used when the Councilmember is representing the City and the City's official position. A copy of official correspondence should be given to the Council Executive Assistant to be filed in the Council Office as part of the permanent public record.

City letterhead should not be used for non-City business nor for correspondence representing a dissenting point of view from an official Council position.

## 5. Council Conduct with Boards and Commissions

*"We rarely find that people have good sense unless they agree with us."*
*--Francois, Duc de La Rochefoucauld*

The City has established several boards and commissions as a means of gathering more community input. Citizens who serve on boards and commissions become more involved in government and serve as advisors to the City Council. They are a valuable resource to the City's leadership and should be treated with appreciation and respect.

*If attending a board or commission meeting, be careful to only express personal opinions*
Councilmembers may attend any board or commission meeting, which are always open to any member of the public. However, they should be sensitive to the way their participation especially if it is on behalf of an individual, business or developer -- could be viewed as unfairly affecting the process. Any public comments by a Councilmember at a board or commission meeting should be clearly made as individual opinion and not a representation of the feelings of the entire City Council.

*Limit contact with board and commission members to questions of clarification*
It is inappropriate for a Councilmember to contact a board or commission member to lobby on behalf of an individual, business, or developer, and vice versa. It is acceptable for Councilmembers to contact board or commission members in order to clarify a position taken by the board or commission.

*Remember that boards and commissions serve the community, not individual Councilmembers*
The City Council appoints individuals to serve on boards and commissions, and it is the responsibility of boards and commissions to follow policy established by the Council. But board and commission members do not report to individual Councilmembers, nor should Councilmembers feel they have the power or right to

threaten board and commission members with removal if they disagree about an issue. Appointment and re-appointment to a board or commission should be based on such criteria as expertise, ability to work with staff and the public, and commitment to fulfilling official duties. A board or commission appointment should not be used as a political "reward."

*Be respectful of diverse opinions*
A primary role of boards and commissions is to represent many points of view in the community and to provide the Council with advice based on a full spectrum of concerns and perspectives. Councilmembers may have a closer working relationship with some individuals serving on boards and commissions, but must be fair and respectful of all citizens serving on boards and commissions.

*Keep political support away from public forums*
Board and commission members may offer political support to a Councilmember, but not in a public forum while conducting official duties. Conversely, Councilmembers may support board and commission members who are running for office, but not in an official forum in their capacity as a Councilmember.

**6. Conduct with the Media**

*"Keep them well fed and never let them know that all you've got is a chair and a whip."*
*-- Lion Tamer School*

Board and commission members are not authorized to represent the City outside of official board/commission meetings unless specifically authorized to do so.

Councilmembers are frequently contacted by the media for background and quotes.

*The best advice for dealing with the media is to never go "off the record"*
Most members of the media represent the highest levels of journalistic integrity and ethics, and can be trusted to keep their word. But one bad experience can be catastrophic. Words that are not said cannot be quoted.

*The Mayor is the official spokesperson for the City on City positions.*
The Mayor is the designated representative of the Council to present and speak on the official City position. If an individual Councilmember is contacted by the media, the Councilmember should be clear about whether their comments represent the official City position or a personal viewpoint.

*Choose words carefully and cautiously*
Comments taken out of context can cause problems. Be especially cautious about humor, sardonic asides, sarcasm, or word play. It is never appropriate to use personal slurs or swear words when talking with the media.

## C. SANCTIONS

*"You cannot have a proud and chivalrous spirit if your conduct is mean and paltry;*
*for whatever a man's actions are, such must be his spirit."*
*-- Demosthenes*

*Public Disruption*
Members of the public who do not follow proper conduct after a warning in a public hearing may be barred from further testimony at that meeting or removed from the Council Chambers.

*For ease of reference in the Code of Ethics and Conduct, the term "member" refers to any member of the Sunnyvale City Council or the City's boards and commissions established by the City Charter, City Ordinance or Council policy.*

*Inappropriate Staff Behavior*
Councilmembers should refer to the city manager any City staff or to the city attorney any City Attorney's staff who do not follow proper conduct in their dealings with Councilmembers, other City staff, or the public. These employees may be disciplined in accordance with standard City procedures for such actions. (Please refer to the section on Council Conduct with City Staff for more details on interaction with Staff.)

*Councilmembers Behavior and Conduct*
Compliance and Enforcement. The Sunnyvale Code of Ethics and Conduct expresses standards of ethical conduct expected for members of the Sunnyvale City Council, boards and commissions. Members themselves have the primary responsibility to assure that ethical standards are understood and met, and that the public can continue to have full confidence in the integrity of government. The chairs of boards and commissions and the Mayor and Council have the additional responsibility to intervene when actions of members that appear to be in violation of the Code of Ethics and Conduct are brought to their attention.

City Councilmembers who intentionally and repeatedly do not follow proper conduct may be reprimanded or formally censured by the Council, lose seniority or committee assignments (both within the City of Sunnyvale or with inter-government agencies) or have official travel restricted. Serious infractions of the Code of Ethics or Code of Conduct could lead to other sanctions as deemed appropriate by Council.

Councilmembers should point out to the offending Councilmember infractions of the Code of Ethics and Conduct. If the offenses continue, then the matter should be referred to the Mayor in private. If the Mayor is the individual whose actions are being challenged, then the matter should be referred to the Vice Mayor.

It is the responsibility of the Mayor to initiate action if a Councilmember's behavior may warrant sanction. If no action is taken by the Mayor, the alleged violation(s) can be brought up with the full Council in a public meeting.

*Board and Commission Members Behavior and Conduct*
Counseling, verbal reprimands and written warnings may be administered by the Mayor to board and commission members failing to comply with City policy. These lower levels of sanctions shall be kept private to the degree allowed by law. Copies of all written reprimands administered by the Mayor shall be distributed in memo format to the chair of the respective board or commission, the city clerk, the city attorney, the city manager, and the City Council. Written reprimands administered by the Mayor shall not be included in packets for public meetings and shall not be publicized except as required under the Public Records Act.

The City Council may impose sanctions on board and commission members whose conduct does not comply with the City's policies, up to and including removal from office. Any form of discipline imposed by Council shall be determined by a majority vote of at least a quorum of the Council at a noticed public meeting and such action shall be preceded by a Report to Council with supporting documentation. The Report to Council shall be distributed in accordance with normal procedures, including hard copies to numerous public facilities and posting online. Any Report to Council addressing alleged misconduct by a board or commission member shall be routed through the Office of the city attorney for review of whether any information is exempt from disclosure (subject to redaction) based on privacy interests authorized under the Public Records Act.

When deemed warranted, the Mayor or majority of Council may call for an investigation of board or commission member conduct. Should the city manager or city attorney believe an investigation is warranted,

they shall confer with the Mayor or Council. The Mayor or Council shall ask the city manager and/or the city attorney to investigate the allegation and report the findings.

The results of any such investigation shall be provided to the full Council in the form of a Report to Council, and shall be placed on the agenda of a noticed public meeting as "Information Only". Any such report shall be made public and distributed in accordance with normal procedures (i.e., hard copies to numerous public locations and posted online). Any report to Council addressing the investigation of board and commission members shall be routed through the Office of the City Attorney for review of whether any information is exempt from disclosure (subject to redaction) based on privacy interests authorized under the Public Records Act.

It shall be the Mayor and/or the Council's responsibility to determine the next appropriate action. Any such action taken by Council (with the exception of "take no further action") shall be conducted at a noticed public hearing. These actions include, but are not limited to: discussing and counseling the individual on the violations; placing the matter on a future public hearing agenda to consider sanctions; forming a Council ad hoc subcommittee to review the allegation, the investigation and its findings, as well as to recommend sanction options for Council consideration.

Under the City Charter, the City Council also may remove members of boards and commissions from office. A violation of this Code of Ethics and Conduct shall not be considered a basis for challenging the validity of a Council, board or commission decision.

## D. PRINCIPLES OF PROPER CONDUCT

**Proper conduct IS …**

- Keeping promises
- Being dependable
- Building a solid reputation
- Participating and being available
- Demonstrating patience
- Showing empathy
- Holding onto ethical principles under stress
- Listening attentively
- Studying thoroughly
- Keeping integrity intact
- Overcoming discouragement
- Going above and beyond, time and time again
- Modeling a professional manner

**Proper conduct IS NOT …**

- Showing antagonism or hostility
- Deliberately lying or misleading
- Speaking recklessly
- Spreading rumors
- Stirring up bad feelings, divisiveness
- Acting in a self-righteous manner

*For ease of reference in the Code of Ethics and Conduct, the term "member" refers to any member of the Sunnyvale City Council or the City's boards and commissions established by the City Charter, City Ordinance or Council policy.*

**It all comes down to respect**

Respect for one another as individuals … respect for the validity of different opinions … respect for the democratic process … respect for the community that we serve.

## E. CHECKLIST FOR MONITORING CONDUCT

- Will my decision/statement/action violate the trust, rights or good will of others?
- What are my interior motives and the spirit behind my actions?
- If I have to justify my conduct in public tomorrow, will I do so with pride or shame?
- How would my conduct be evaluated by people whose integrity and character I respect?
- Even if my conduct is not illegal or unethical, is it done at someone else's painful expense? Will it destroy their trust in me? Will it harm their reputation?
- Is my conduct fair? Just? Morally right?
- If I were on the receiving end of my conduct, would I approve and agree, or would I take offense?
- Does my conduct give others reason to trust or distrust me?
- Am I willing to take an ethical stand when it is called for? Am I willing to make my ethical beliefs public in a way that makes it clear what I stand for?
- Do I exhibit the same conduct in my private life as I do in my public life?
- Can I take legitimate pride in the way I conduct myself and the example I set?
- Do I listen and understand the views of others?
- Do I question and confront different points of view in a constructive manner?
- Do I work to resolve differences and come to mutual agreement?
- Do I support others and show respect for their ideas?
- Will my conduct cause public embarrassment to someone else?

## F. GLOSSARY OF TERMS

| | |
|---|---|
| **attitude** | The manner in which one shows one's dispositions, opinions, and feelings |
| **behavior** | External appearance or action; manner of behaving; carriage of oneself |
| **civility** | Politeness, consideration, courtesy |
| **conduct** | The way one acts; personal behavior |
| **courtesy** | Politeness connected with kindness |
| **decorum** | Suitable; proper; good taste in behavior |
| **manners** | A way of acting; a style, method, or form; the way in which thing are done |
| **point of order** | An interruption of a meeting to question whether rules or bylaws are being broken, such as the speaker has strayed from the motion currently under consideration |
| **point of personal privilege** | A challenge to a speaker to defend or apologize for comments that a fellow member considers offensive |
| **propriety** | Conforming to acceptable standards of behavior |
| **protocol** | The courtesies that are established as proper and correct |
| **respect** | The act of noticing with attention; holding in esteem; courteous regard |

## G. IMPLEMENTATION

As an expression of the standards of conduct for members expected by the City, the Sunnyvale Code of Ethics and Conduct is intended to be self-enforcing. It therefore becomes most effective when members are thoroughly familiar with it and embrace its provisions. For this reason, this document shall be included in the regular orientations for candidates for City Council, applicants to board and commissions, and newly elected

*For ease of reference in the Code of Ethics and Conduct, the term "member" refers to any member of the Sunnyvale City Council or the City's boards and commissions established by the City Charter, City Ordinance or Council policy.*

and appointed officials. Members entering office shall sign a statement affirming they read and understood the City of Sunnyvale Code of Ethics and Conduct. In addition, the Code of Ethics and Conduct shall be annually reviewed by the City Council, boards and commissions, and the City Council shall consider recommendations from boards and commissions and update it as necessary.

(Adopted: RTC 08-113 (4/8/08), Update: RTC 09-036 (2/3/09); Updated: RTC 09-047 (2/24/09); Approved with no changes: RTC 10-078 (3/23/10))

Lead Department: Office of the City Manager

*For ease of reference in the Code of Ethics and Conduct, the term "member" refers to any member of the Sunnyvale City Council or the City's boards and commissions established by the City Charter, City Ordinance or Council policy.*