CITY OF SUNNYVALE REPORT
ZONING ADMINISTRATOR HEARING

May 11, 2011

File Number: 2011-7156 **Permit Type:** Use Permit

Location: 808 Duff Ct. (near Gail Ave.) (APN: 211-11-026)

Applicant/Owner:

Staff Contact: Shaunn Mendrin, Senior Planner, (408) 730-7429

Project Description: To allow an accessory structure of approximately 500 square feet.

Reason for Permit: A Use Permit is required for detached accessory structures greater than 450 square feet.

Issues: Compatibility

Recommendation: Approve with Conditions

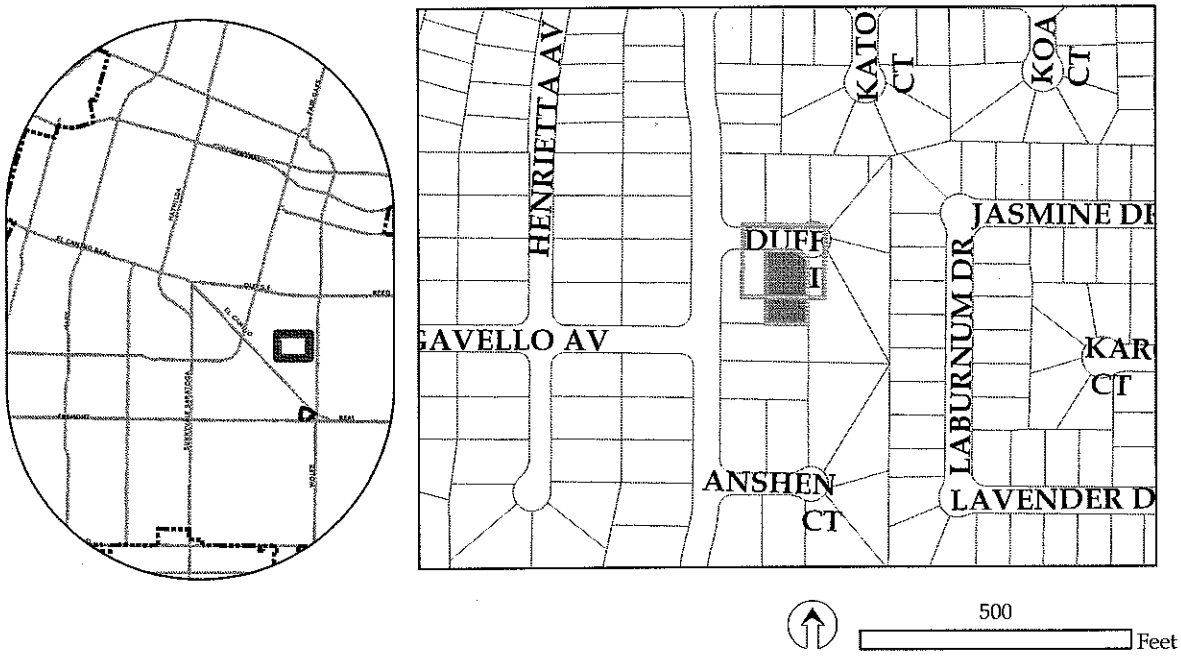

PROJECT DESCRIPTION

	Existing	Proposed
General Plan:	Residential Low Density	No Change
Zoning District:	R-O	No Change
Lot Size:	10,218 sf	No Change
Floor Area:	1,822 sf	2,316 sf
FAR/Lot Coverage:	17%	22%
Front Setback:	30'	20'
Right Side Setback:	10'	No Change
Left Side Setback:	40'	9'
Combined Total:	50'	19'
Rear Yard Setback:	32'	No Change

Previous Planning Projects related to Subject	**None**
Neighborhood Preservation Complaints	**None**
Deviations from Standard Zoning Requirements	**None**

Use Description: The proposed project includes construction of a new 494 square foot detached accessory structure for parking and storage. The structure is proposed for parking and includes a half bath and utility sink. The structure will be accessed from Duff Court over an existing rolled curb.

Design: The structure is proposed to have a simple gable roof form. The slope proposed for the new structure is slightly steeper than the existing home and staff has conditioned that the building permit plans reflect a 3 and 12 slope for the new structure to make it consistent with the existing home. The structure includes one large 18 foot wide door for the garage. The existing home garage is split into two garage doors. Although the garage is located behind the existing fence, staff has added a condition that the garage opening be split into two openings (similar to the existing garage) and the doors shall be a simple design to match the existing.

Public Contact: 14 notices were sent to surrounding property owners and residents adjacent to subject site in addition to standard noticing practice. No letters were received.

Environmental Determination: A Categorical Exemption Class 1 (minor changes in use) relieves this project from CEQA provisions.

FINDINGS

In order to approve the Use Permit the following findings must be made:

1. The proposed use attains the objectives and purposes of the General Plan of the City of Sunnyvale.

   The proposed detach accessory structure is allowed through the review of a Use Permit. The proposed location complies with the required setbacks, floor area and lot coverage for the site and is therefore consistent with the intent of the General Plan. In addition, the accessory structure will provide additional parking spaces for the home.

   Staff was able to make the findings as the design meets the guidelines described above.

2. The proposed use ensures that the general appearance of proposed structures, or the uses to be made of the property to which the application refers, will not impair the orderly development of, or the existing uses being made of, adjacent properties.

   The project is expected to have no impacts on surrounding properties.

ALTERNATIVES:

1. Approve the Use Permit with recommended Conditions in Attachment A.
2. Approve the Use Permit with modifications.
3. Deny the Use Permit.

RECOMMENDATION

Alternative 1. Approve the Use Permit with recommended Conditions in Attachment A.

Reviewed by:

Steve Lynch
Senior Planner

Prepared By: Shaunn Mendrin, Senior Planner

Attachments:
A. Standard Requirements and Recommended Conditions of Approval
B. Site and Architectural Plans

RECOMMENDED
CONDITIONS OF APPROVAL AND
STANDARD DEVELOPMENT REQUIREMENTS
May 11, 2011

Planning Application 2011-7156
808 Duff Court
Use Permit to allow the construction of a 494 square foot detached accessory structure.

The following Conditions of Approval [COA] and Standard Development Requirements [SDR] apply to the project referenced above. The COAs are specific conditions applicable to the proposed project. The SDRs are items which are codified or adopted by resolution and have been included for ease of reference, they may not be appealed or changed. The COAs and SDRs are grouped under specific headings that relate to the timing of required compliance. Additional language within a condition may further define the timing of required compliance. Applicable mitigation measures are noted with "Mitigation Measure" and placed in the applicable phase of the project.

In addition to complying with all applicable City, County, State and Federal Statutes, Codes, Ordinances, Resolutions and Regulations, Permittee expressly accepts and agrees to comply with the following Conditions of Approval and Standard Development Requirements of this Permit:

GC: THE FOLLOWING GENERAL CONDITIONS OF APPROVAL AND STANDARD DEVELOPMENT REQUIREMENTS SHALL APPLY TO THE APPROVED PROJECT.

GC-1. CONFORMANCE WITH APPROVED PLANNING APPLICATION:
All building permit drawings and subsequent construction and operation shall substantially conform with the approved planning application, including: drawings/plans, materials samples, building colors, and other items submitted as part of the approved application. Any proposed amendments to the approved plans or Conditions of Approval are subject to review and approval by the City. The Director of Community Development shall determine whether revisions are considered major or minor. Minor changes are subject to review and approval by the Director of Community Development. Major changes are subject to review at a public hearing. [COA] [PLANNING]

GC-2. USE EXPIRATION:
The approved use Permit for the use shall expire if the use is discontinued for a period of one year or more. [SDR] (PLANNING)

GC-3. PERMIT EXPIRATION:
The permit shall be null and void two years from the date of approval by the final review authority at a public hearing if the approval is not exercised, unless a written request for an extension is received prior to expiration date and is approved by the Director of Community

BP: THE FOLLOWING SHALL BE ADDRESSED ON THE CONSTRUCTION PLANS SUBMITTED FOR ANY DEMOLITION PERMIT, BUILDING PERMIT, GRADING PERMIT, AND/OR ENCROACHMENT PERMIT AND SHALL BE MET PRIOR TO THE ISSUANCE OF SAID PERMIT(S).

BP-1. CONDITIONS OF APPROVAL:
Final plans shall include all Conditions of Approval included as part of the approved application starting on sheet 2 of the plans. [COA] [PLANNING]

BP-2. RESPONSE TO CONDITIONS OF APPROVAL:
A written response indicating how each condition has or will be addressed shall accompany the building permit set of plans. [COA] [PLANNING]

BP-3. REQUIRED REVISIONS TO PROJECT PLANS:
The building permit plans shall include the following changes [COA] [PLANNING]:

a) The roof slope for the detached accessory structure shall be 3 and 12.

b) The 18 foot wide garage door shall be changes to two single car garage door openings to match the existing home.

c) The garage doors shall be a simple design to be compatible with the existing home (e.g. no bevels or windows).

808 Duff Ct. Additional Garage Project Plan (updated 04/13/2010):

1. Project Data:
    a. Lot Size: 10218 ft
    b. Living area:
        i. Existing: 1462 ft
        ii. Proposed: 1462 ft
    c. Garage:
        i. Existing: 18*20 = 360
        ii. Proposed: 19*26 = 494
    d. Floor Area Ratio:
        i. Existing: 1942/10041 = 19.01%
        ii. Proposed: (1942+494)/10041 = 23.84%
    e. Lot Coverage:
        i. Existing: 1462 + 360 +120 = 1942
        ii. Proposed: 1942 + 494 = 2434
2. Site Plan: Attachment I
3. Architectural Elevations: Attachment II
4. Building Material:
    a. Roof: Composition Shingle
    b. Exterior: Stucco
5. Photos:

Attachment I

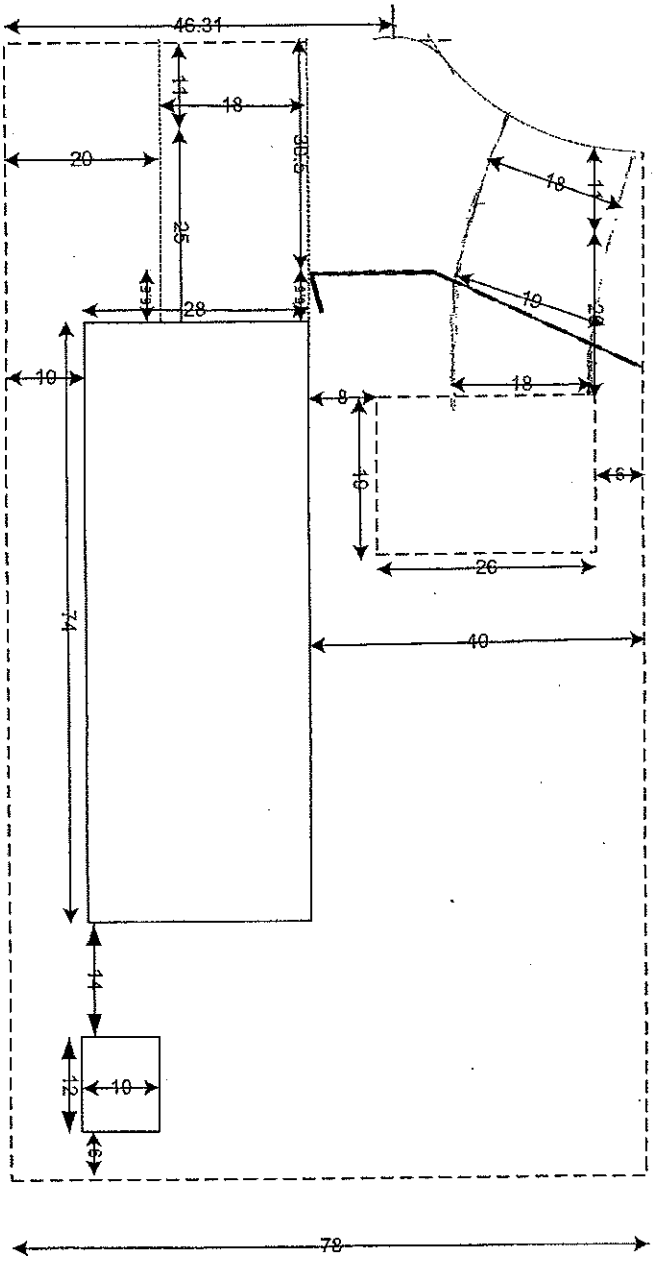

ATTACHMENT ___ of ___
Page ___

Back

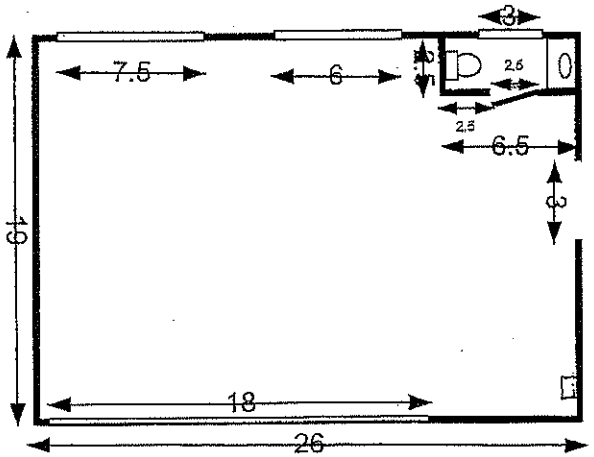

Front

West End

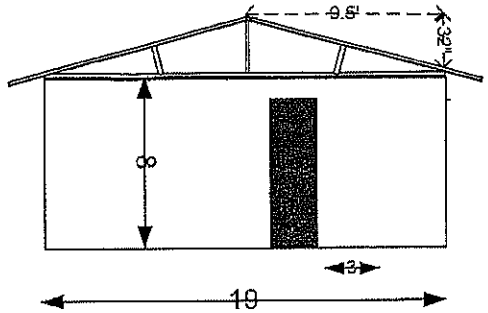

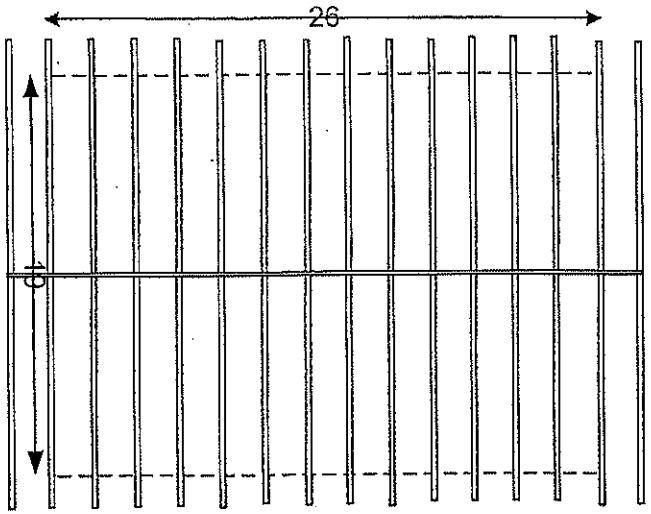

East End

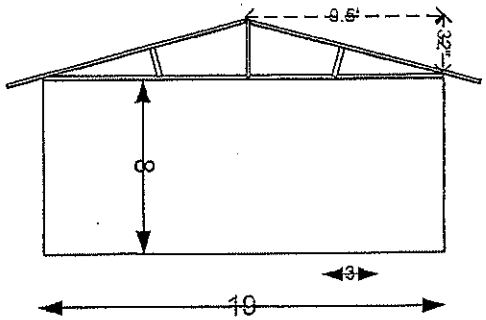

ATTACHMENT 5 of 4
Page

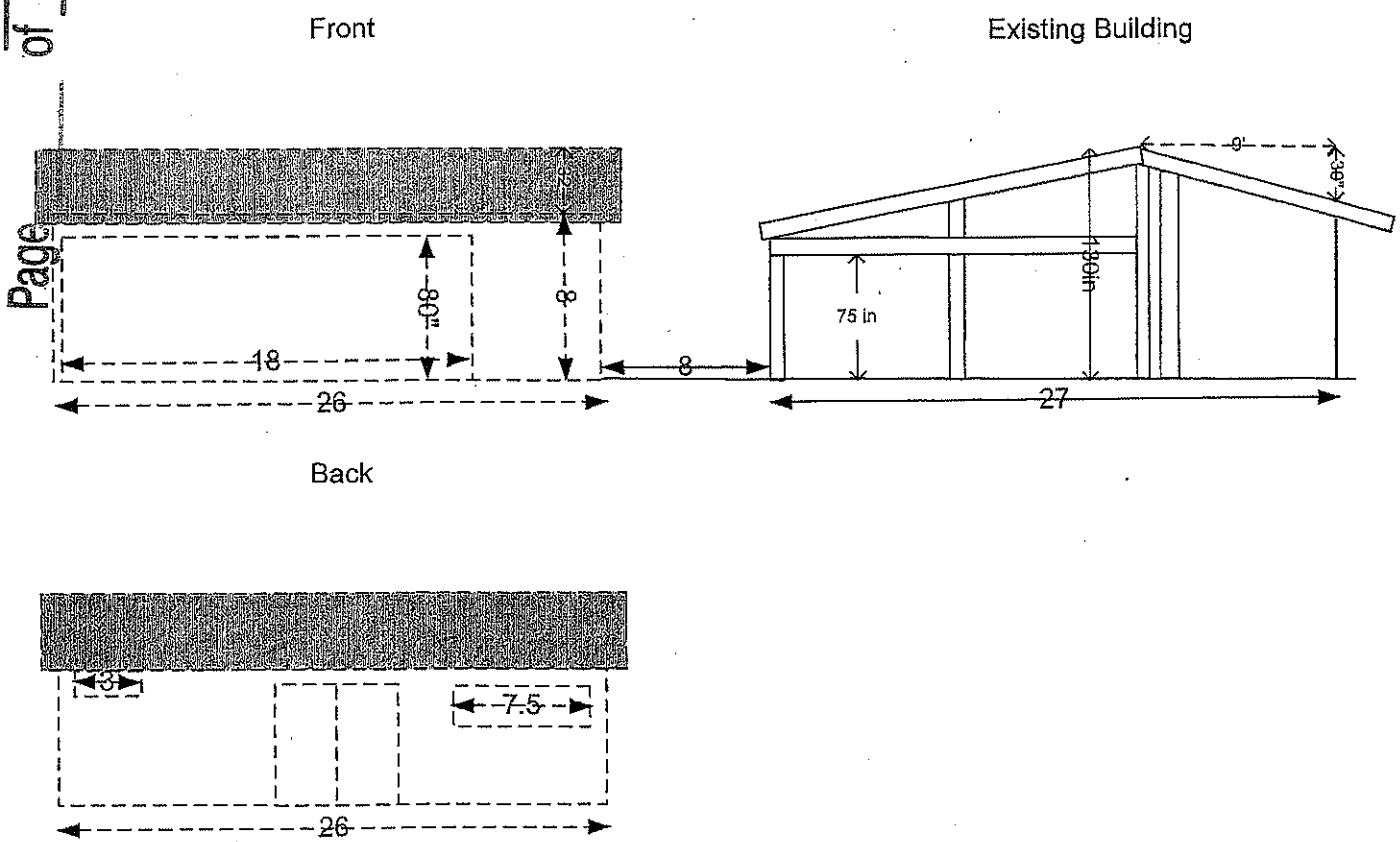

ATTACHMENT
Page of