CITY OF SUNNYVALE REPORT
ZONING ADMINISTRATOR HEARING

February 29, 2012

File Number: 2011-7889 **Permit Type:** Use Permit

Location: 275 N. Fair Oaks Ave. (near E. Arques Ave.) (APN: 204-39-054)

Applicant/Owner: European Auto Sales

Staff Contact: Shaunn Mendrin, Senior Planner, (408) 730-7429

Project Description: To allow for auto retail in an industrial zoning district.

Reason for Permit: A Use Permit is required for to allow retail auto sales for three automobiles.

Issues: Parking

Recommendation: Deny

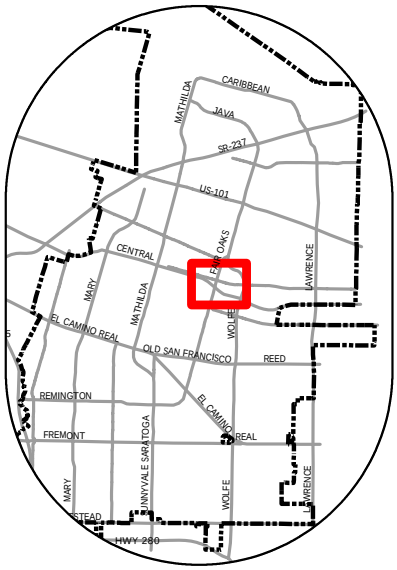

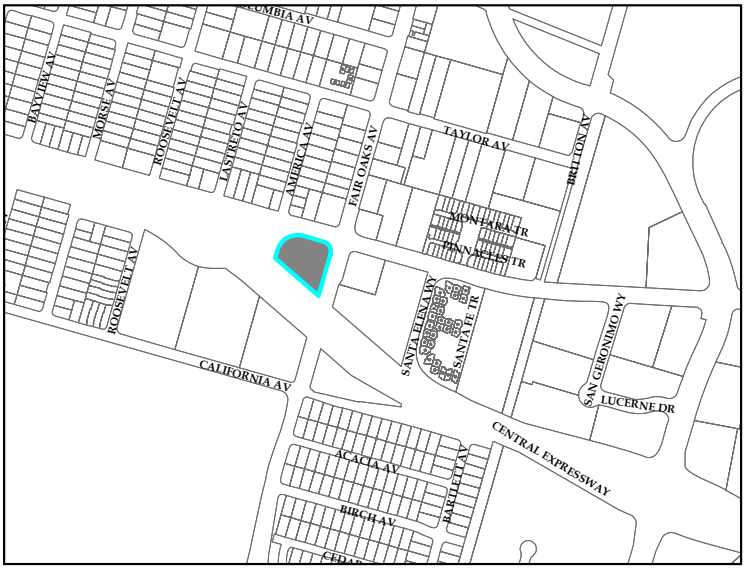

500 Feet

PROJECT DESCRIPTION

	Existing	Proposed
General Plan:	Industrial	No Change
Zoning District:	Industrial & Service	No Change
Total Sq. Ft. on Site:	13,940	No Change
Tenant Sq. Ft.:	3,680	No Change
Parking:	73 (Includes Service Bays)	No Change

Previous Planning Projects related to Subject Application • **UP 3055** Allow auto repair on south side of parcel (note: the current parcel is the result of merging two parcels, and this Use Permit affected only the south parcel). Planning Commission/Approved on 5/12/75 • **V-75-32** Variance for reduced setback on south portion of parcel on N. Fair Oaks frontage (25 feet where 35 feet is required) Planning Commission/Approved 5/12/75 • **UP 3650** Allow auto repair. Planning Commission/Approved 3/27/78 • **V-78-20** Variance for reduced setback on north portion of parcel on N. Fair Oaks frontage (25 feet where 35 feet is required) and on Arques Avenue frontage (32 feet where 35 feet is required). Planning Commission/Approved 3/27/78 • **DP 6459** Allow auto brokerage and new Master Sign Program. Administrative Hearing/Approved 10/26/88 • **MPA 6585** Landscape modification. Staff/Approved 3/10/89 • **MPA 7316** Modify Master Sign Program. Staff/Approved 5/30/81 • **UP 1998-1164** to allow used auto brokerage ancillary to an existing auto repair facility (1car). Administrative Hearing/Approved (Expired, Never Exercised) • **VAR 1999-0957** Restriping of parking lot. Staff/Denied 3/16/1990 • **MPP 2006-0972** Allow autobroker in MS Zone. Staff/Approved 10/10/2006	**Yes**
Neighborhood Preservation Complaints	**No**
Deviations from Standard Zoning Requirements	**No**

Use Description: The applicant is proposing to allow retail auto sales for three cars for the European Works tenant space located in the southernmost building. The south side of the site is separated from the remaining uses due to the building location and configuration on the site and is generally only used

by the project applicant. The applicant has been operating as an auto broker since 2006, which do not require display area (unlike retail auto sales). The applicant has indicated that car sales through a brokerage have minimal profit and that auto sales would provide supplemental income for the existing business.

Parking: The Zoning Code requires 73 parking spaces based on the original use permit for an auto repair center, there were 72 spaces on site (including service bays). Based on past applications, parking has always been an issue for this site based on the uses and limited additional street parking. Staff met with the applicant at the project site to discuss the proposed use and parking availability. The northern half of the site was and has been severely impacted. Parking for the applicant side of the site also appeared to be impacted with approximately 6 to 8 spaces open for parking. The applicant indicated that the additional cars located on the site were stored over the holidays for various customers and they would be moved shortly. Staff drove by the site again in early February and it appeared there were slightly fewer parking spaces available (approximately 5).

Public Contact: 24 notices were sent to surrounding property owners and residents adjacent to subject site in addition to standard noticing practice. No letters were received.

Environmental Determination: A Categorical Exemption Class 1 (minor changes in use) relieves this project from CEQA provisions.

FINDINGS

In order to approve the Use Permit the following findings must be made:

1. The proposed use attains the objectives and purposes of the General Plan of the City of Sunnyvale. ***Finding Not Met***

   Staff was not able to make the findings as the proposed use would further exacerbate parking problems on the subject site.

2. The proposed use ensures that the general appearance of proposed structures, or the uses to be made of the property to which the application refers, will not impair the orderly development of, or the existing uses being made of, adjacent properties. ***Finding Not Met***

   The proposed business would require three parking spaces to be devoted to auto display in an area with impacted parking.

ALTERNATIVES:

1. Approve the Use Permit with recommended Conditions in Attachment A.
2. Approve the Use Permit with modifications.
3. Deny the Use Permit.

RECOMMENDATION

Alternative 3. Deny the Use Permit.

As an alternative the Zoning Administrator may consider approval of the proposed use (Alternative 2) with a limited one year approval and require a compliance review by the Director of Community Development through a Miscellaneous Plan Permit application prior to the end of the one year approval. At which time staff may determine if the use has been managed site parking accordingly. Staff has included Conditions of Approval in Attachment A.

Reviewed by:

Gerri Caruso
Principal Planner

Prepared By: Shaunn Mendrin, Senior Planner

Attachments:

A. Standard Requirements and Recommended Conditions of Approval
B. Site and Architectural Plans
C. Letter from the Applicant

RECOMMENDED
CONDITIONS OF APPROVAL AND
STANDARD DEVELOPMENT REQUIREMENTS
February 29, 2012

Planning Application 2011-7889
275 N. Fair Oaks
Use Permit to allow auto sales for three automobiles as an ancillary use auto repair business located in the southern tenant space.

The following Conditions of Approval [COA] and Standard Development Requirements [SDR] apply to the project referenced above. The COAs are specific conditions applicable to the proposed project. The SDRs are items which are codified or adopted by resolution and have been included for ease of reference, they may not be appealed or changed. The COAs and SDRs are grouped under specific headings that relate to the timing of required compliance. Additional language within a condition may further define the timing of required compliance. Applicable mitigation measures are noted with "Mitigation Measure" and placed in the applicable phase of the project.

In addition to complying with all applicable City, County, State and Federal Statutes, Codes, Ordinances, Resolutions and Regulations, Permittee expressly accepts and agrees to comply with the following Conditions of Approval and Standard Development Requirements of this Permit**:**

GC: THE FOLLOWING GENERAL CONDITIONS OF APPROVAL AND STANDARD DEVELOPMENT REQUIREMENTS SHALL APPLY TO THE APPROVED PROJECT.

GC-1. CONFORMANCE WITH APPROVED PLANNING APPLICATION:
All building permit drawings and subsequent construction and operation shall substantially conform with the approved planning application, including: drawings/plans, materials samples, building colors, and other items submitted as part of the approved application. Any proposed amendments to the approved plans or Conditions of Approval are subject to review and approval by the City. The Director of Community Development shall determine whether revisions are considered major or minor. Minor changes are subject to review and approval by the Director of Community Development. Major changes are subject to review at a public hearing. [COA] [PLANNING]

GC-2. USE EXPIRATION:
The approved use Permit for the use shall expire if the use is discontinued for a period of one year or more. [SDR] (PLANNING)

GC-3. PERMIT EXPIRATION:
The permit shall be null and void **one** year from the date of approval by the final review authority at a public hearing if the approval is not exercised, unless a written request for an extension is received prior to expiration date and is approved by the Director of Community Development. [SDR] (PLANNING)

GC-4. MISCELLANEOUS PLAN PERMIT REVIEW:
The applicant shall apply for a miscellaneous Plan Permit (MPP) permit by February 1, 2013. The MPP will be reviewed by the Director for Community Development for conformance with required parking and evaluation of compatibility of the use with the site. If approved, new Conditions of Approval may be issued. [SDR] (PLANNING)

BP: THE FOLLOWING SHALL BE ADDRESSED ON THE CONSTRUCTION PLANS SUBMITTED FOR ANY DEMOLITION PERMIT, BUILDING PERMIT, GRADING PERMIT, AND/OR ENCROACHMENT PERMIT AND SHALL BE MET PRIOR TO THE ISSUANCE OF SAID PERMIT(S).

BP-1. CONDITIONS OF APPROVAL:
Final plans shall include all Conditions of Approval included as part of the approved application starting on sheet 2 of the plans. [COA] [PLANNING]

AT: THE FOLLOWING CONDITIONS OF APPROVAL AND STANDARD DEVELOPMENT REQUIREMENTS SHALL BE COMPLIED WITH AT ALL TIMES THAT THE USE PERMITTED BY THIS PLANNING APPLICATION OCCUPIES THE PREMISES.

AT-1. HOURS OF OPERATION:
The use permitted as part of this application shall comply with the following hours of operation at all times:

a) The hours of operation are limited to 6:00 a.m. to midnight for standard hours of operation, excluding short duration sales events which may have extended hours. Hours extending beyond midnight shall require approval of the Director of Community Development through a Miscellaneous Plan Permit. [COA] [PLANNING]

AT-2. RECYCLING AND SOLID WASTE:
All exterior recycling and solid waste shall be confined to approved receptacles and enclosures. [COA] [PLANNING]

AT-3. LOUDSPEAKERS PROHIBITED:
Out-of-door loudspeakers shall be prohibited at all times. [COA] [PLANNING]

AT-4. EXTERIOR EQUIPMENT:
All unenclosed materials, equipment and/or supplies of any kind shall be maintained within approved enclosure area. Any stacked or stored items shall not exceed the height of the enclosure. Individual air conditioning units shall be screened with architecture or landscaping features. [COA] [PLANNING]

AT-5. PARKING LOT MAINTENANCE:
The parking lot shall be maintained in accordance with the approved plans and as follows:

a) Clearly mark all employee, customer, and compact spaces. This shall be specified on any Building Permit plans required for any improvements and completed prior to occupancy.
b) Maintain all parking lot striping and marking.
c) Assure that adequate lighting is available in parking lots to keep them safe and desirable for the use.
d) Require signs to direct vehicles to additional parking spaces on-site, as needed.
e) Clearly mark all compact spaces as per approved plans. [COA] [PLANNING]

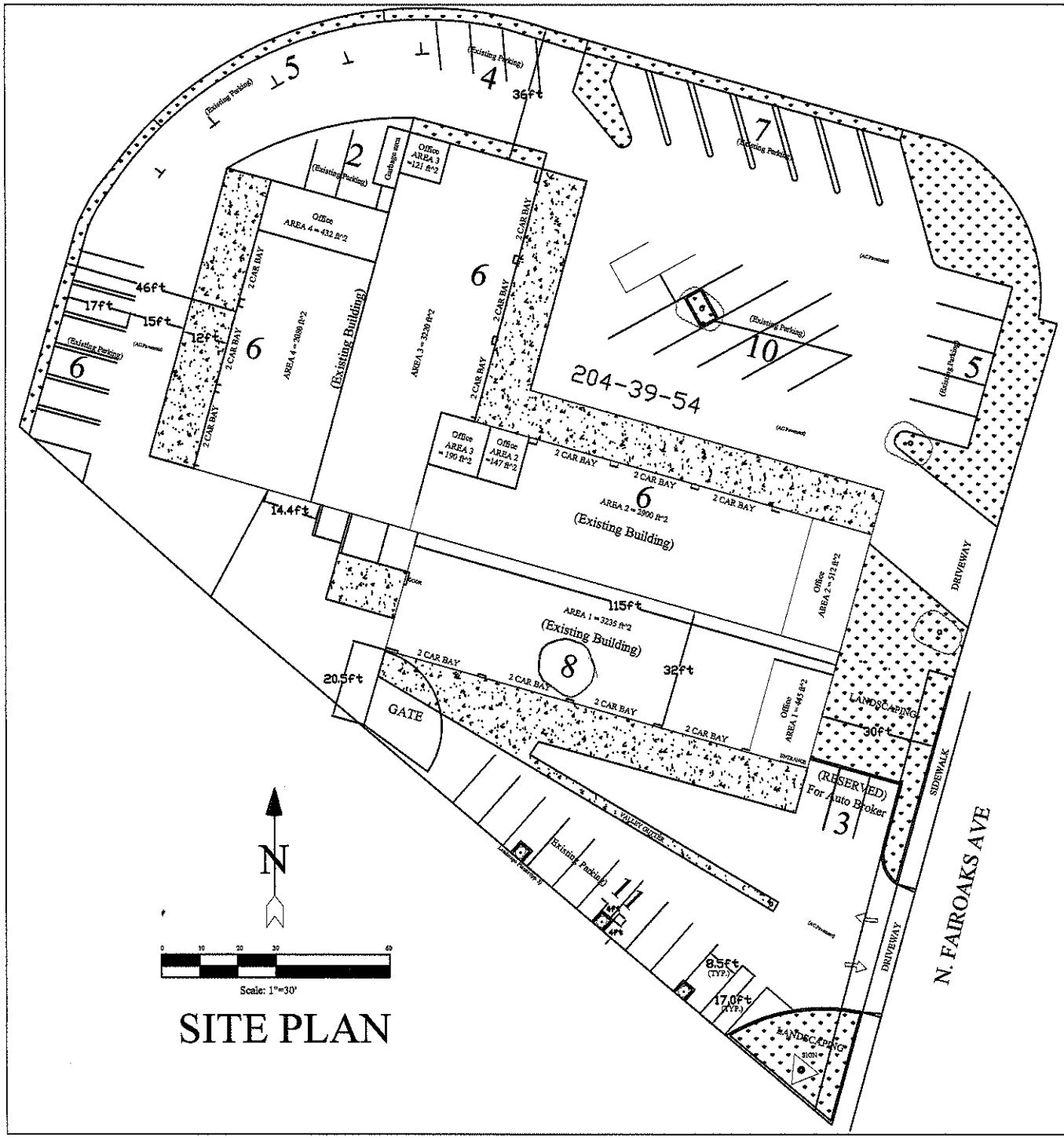

SITE PLAN

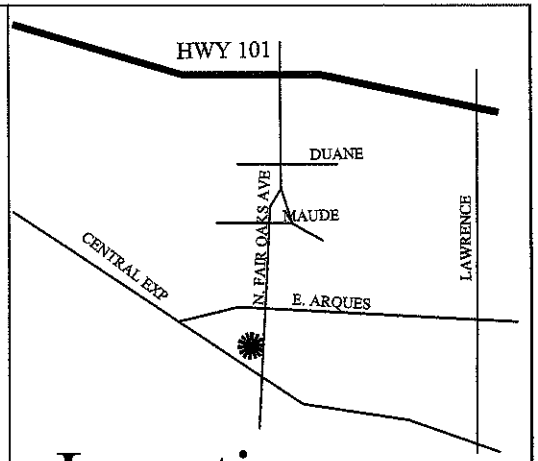

Location map

Building Area schedule

	Vehicle Repair Area (ft^2)	Office Area (ft^2)	
Area 1	3235	445	
Area 2	2900	659	
Area 3	3220	311	
Area 4	2080	432	
TOTAL	11,435	1847	
Spaces needed	11,435/180=64	1847/500=4	68
		Existing Spaces	79

Area 1	3235	445	
Spaces needed	3,235/180=18	445/500=1	19
		Existing Spaces	22
Spaces Reserved for Auto Broker			2

EUROPEAN CAR REPAIR & SERVICE
275 N. FAIR OAKS AVE
SUNNYVALE, CALIFORNIA

REVISION

ATTACHMENT 5

SITE PLAN

JOB	
JOB DATE	9-14-06
DRAWN BY	RS
PAPER SIZE	
SHEET	1
SCALE	1"=30'

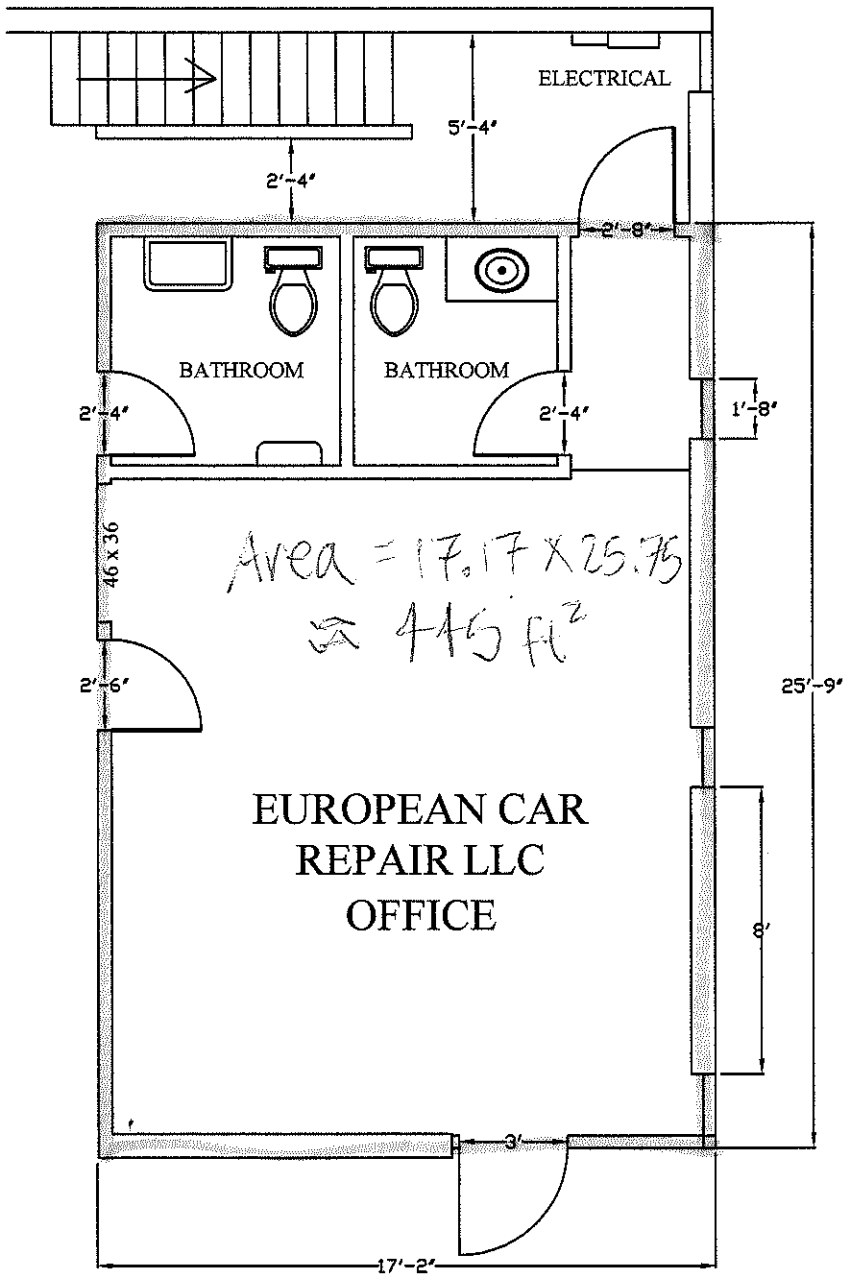

1ST FLOOR PLAN

3/16" = 1'0"

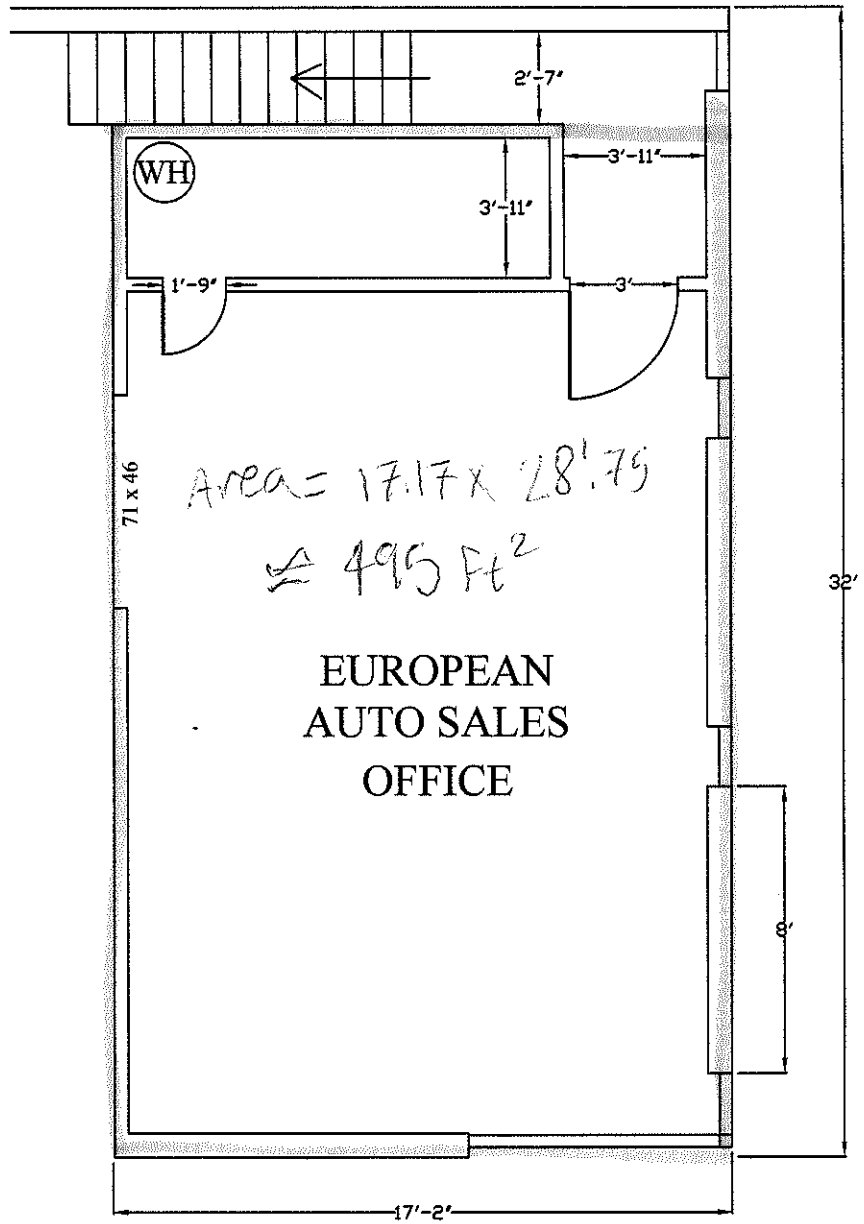

2ND FLOOR PLAN

3/16" = 1'0"

EUROPEAN CAR REPAIR LLC
275 N. FAIR OAKS AVE
SUNNYVALE, CALIFORNI

REVISION

ATTACHMENT 3

Page 2 of 2

FLOOR PLAN

JOB	
DATE	12-10-11
DRAWN BY	RS
PAPER SIZE	
SHEET 1	SCALE 3/16"=1'

European Auto Sales

Project Description Letter

EAS (European Auto Sales) currently holds a wholesale permit to sell vehicles. Due to the bad economy, we would like permission to hold a retail license. If granted we will no longer be engaging in any wholesale business. Nothing else will change. Our business will be conducted the exact same. Our hours of operation are from 7:30am-5:00pm Monday- Friday. We do not have any employees. There are two business partners; Jaclyn Imani & Alfredo Rodriguez.

The city previously allowed us to sell vehicles, with the limit of three parking spaces. This will still remain the same. We do not need any additional spaces; we just need a retail use permit.

We did not sell any vehicles in 2010. We sincerely need this retail license approved. If not I do not believe we will be in business very long. I hope you allow us to make this change, it is extremely necessary.

Thank you

X_____
Jaclyn Imani

X_____
Alfredo Rodriguez