COPYRIGHT © 2002 AEPC GROUP, LLC

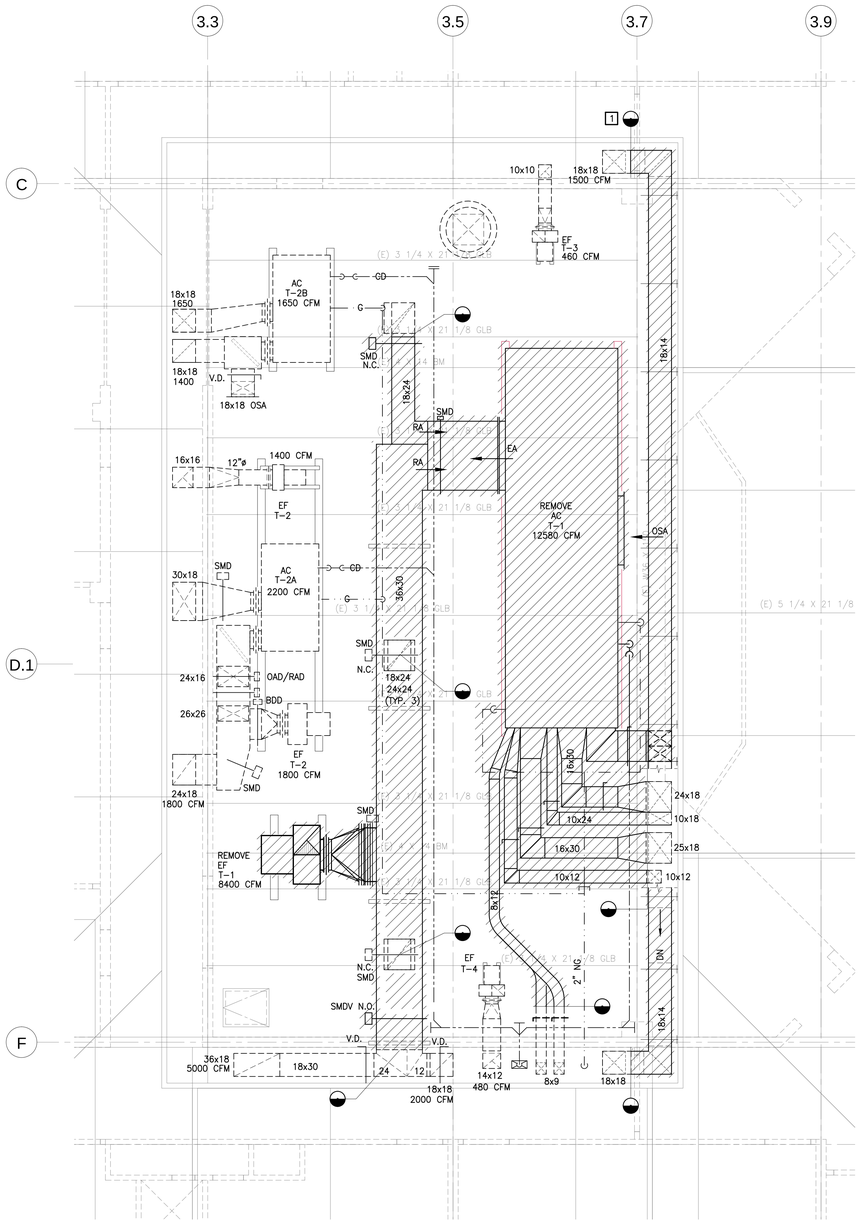

ROOF AREA B DEMOLITION PLAN

1 -

SCALE: 1/4"=1'-0"

N

0 1' 2' 4' 8'

SCALE: 1/4"=1'-0"

GENERAL NOTES:

1. REMOVE EXISTING AC-1 UNIT, DUCTWORK, PIPING AND ASSOCIATED ACCESSORIES INDICATED BY CROSS HATCH SYMBOL.
2. (E) DUCT SUPPORT TO REMAIN. FIELD VERIFY CONDITION OF DUCT SUPPORT. REPLACE IF NECESSARY.

SHEET NOTES:

1. REMOVE (E) SA/RA DUCTWORK INDICATED BY CROSSHATCH SYMBOL UP TO THIS POINT.

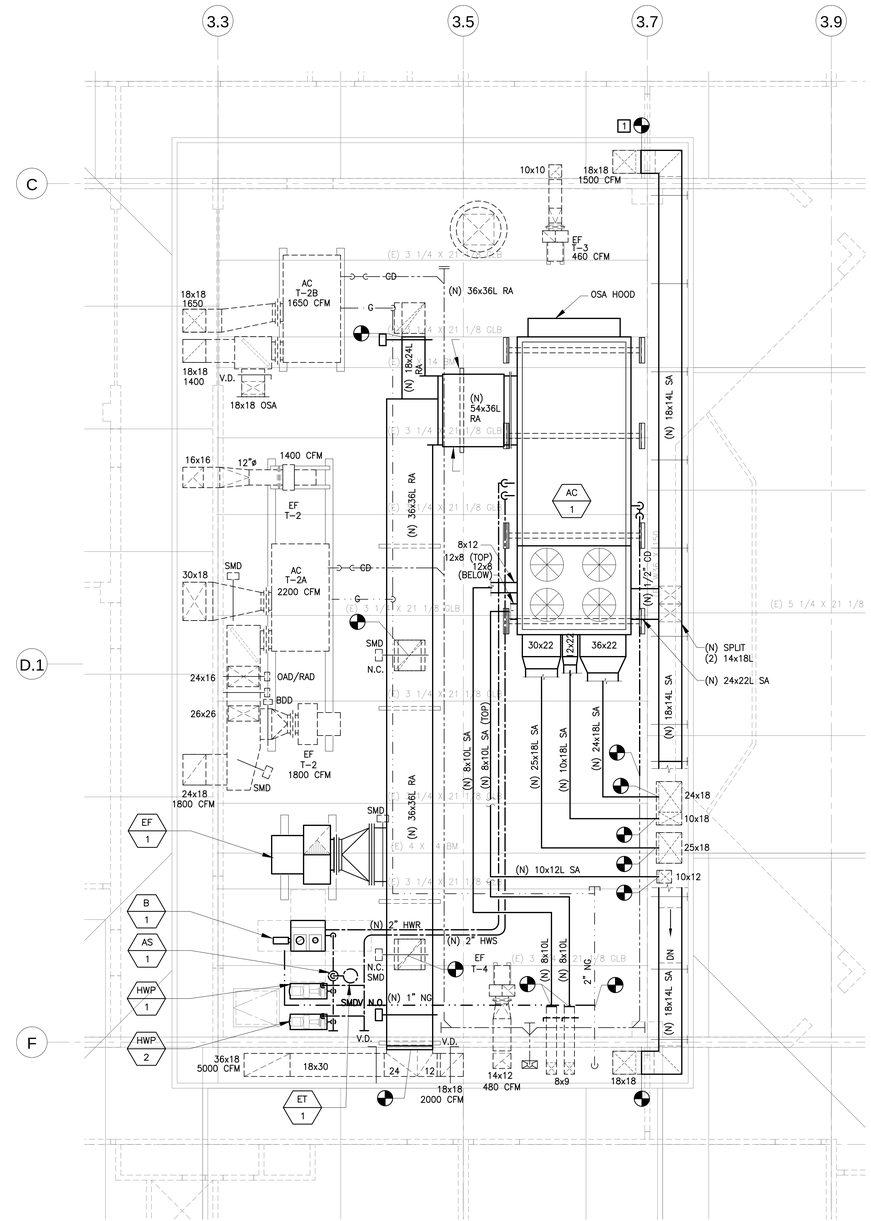

ROOF AREA B PLAN

2 -

SCALE: 1/4"=1'-0"

N

0 1' 2' 4' 8'

SCALE: 1/4"=1'-0"

GENERAL NOTES:

1. PROVIDE PITCHED, RAIN COVER, 18 GA. SHEET METAL, ON THE TOP OF ALL RECTANGULAR HORIZONTAL DUCTS.

SHEET NOTES:

1. CONNECT (N) SA DUCT TO (E) SA DUCT.
2. CONNECT (N) RA DUCT TO (E) RA DUCT.
3. CONNECT (N) 1" NG TO (E) 2" NG.
4. CONNECT (N) 1/2" CD TO (E) CD.
5. PROVIDE (N) DUCT SUPPORT
6. PROVIDE (N) SOUND ATTENUATOR

AEPC Group, LLC
DESIGN • CONSTRUCTION • MANAGEMENT

Northern California Office
5000 Executive Parkway, Suite 475
San Ramon, CA 94583
Telephone: 925-277-3050 / Facsimile: 925-824-0102

ROOFING:

GALE

Gale Associates, Inc.
Engineers and Planners

2570 W. El Camino Real | Suite 320
Mountain View, Ca 94040
P 650.941.1112 F 650.941.1154 www.gainc.com

Boston Baltimore Orlando San Francisco

Registration Stamp

Client:

CITY OF SUNNYVALE CALIFORNIA

Project:

CITY of SUNNYVALE
PERFORMING ARTS CENTER
& CREATIVE ARTS CENTER
HVAC UPGRADE & ROOF
REPLACEMENT PROJECT

PROJECT NUMBER:
PR-08/03-08

Issued for

	RECORD SET	5-9-08

No. Description Issue Date

Designed by: Date:
Checked by: Date:
Drawn by: Date:
Approved by: Date:
Project #: SUNY-8-061
Scale: N.T.S.

MECHANICAL
ROOF AREA B
PLAN

Drawing Number:

PA-M2.1

FILE: J:\AE\Project Files\SUNY Projects\SUNY-8-061 Theater-Craft HVAC Upgrade\Cad\Current\Theater Building\SUNY-8-061-PA-M2.1.dwg Jan 30, 2012 - 11:02am $(GETVAR,P?) sshanley
XREF: SUNY-THEATER-XGRID.dwg X-GRID.dwg X-ROOF.dwg X-HVAC-Roof-Existing X-HVAC-Roof-New.dwg

COPYRIGHT © 2002 AEPC GROUP, LLC

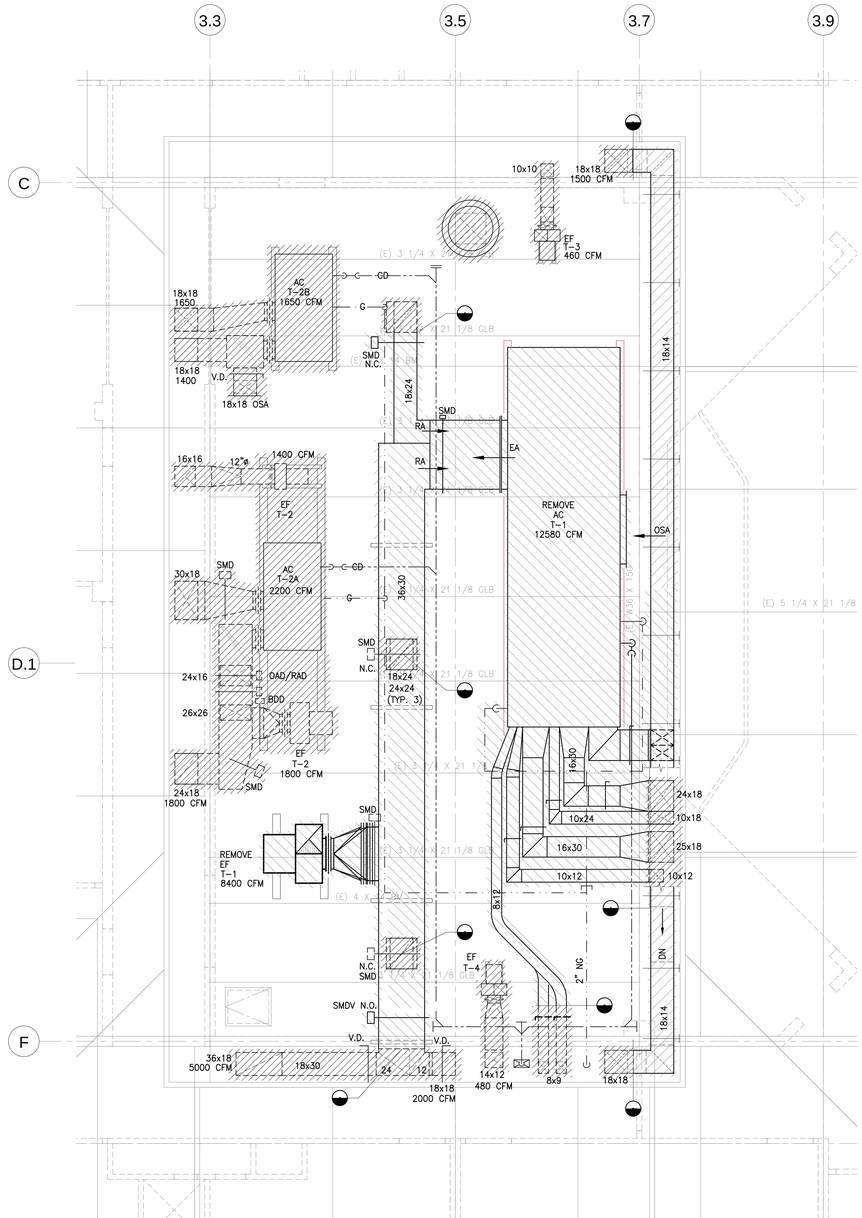

LEGEND:

BY MECHANICAL CONTRACTOR

BY MECHANICAL CONTRACTOR

NOTE:

LIFT UNITS, (E) DUCTWORK AND ASSOCIATED ACCESSORIES ABOVE ROOF FOR EASIER ROOF INSTALL.

ROOF DEMOLITION PLAN

1
-

SCALE: 1/4"=1'-0"

N

0 1' 2' 4' 8'

SCALE: 1/4"=1'-0"

AEPC Group, LLC
DESIGN • CONSTRUCTION • MANAGEMENT

Northern California Office
5000 Executive Parkway, Suite 475
San Ramon, CA 94583
Telephone: 925-277-3050 / Facsimile: 925-824-0102

ARCHITECT:

Registration Stamp

Client:

CITY OF SUNNYVALE CALIFORNIA

Project:

CITY of SUNNYVALE
COMMUNITY CENTER
THEATER
HVAC UPGRADE

PROJECT NUMBER:
818450

Issued for

No.	Description	Issue Date

Designed by:		Date:	
Checked by:		Date:	
Drawn by:		Date:	
Approved by:		Date:	
Project #:	SUNY-8-061		
Scale:	N.T.S.		

MECHANICAL
ROOF PLAN

Drawing Number: M2.1

FILE: J:\AE\Project Files\SUNY Projects\SUNY-8-061 Theater-Craft HVAC Upgrade\Cad\Current\Theater Building\SUNY-8-061-M2.1-RoofingContractor.dwg Jan 30, 2012 - 10:55am $(GETVAR,?1) sshanley
XREF:

COPYRIGHT © 2002 AEPC GROUP, LLC

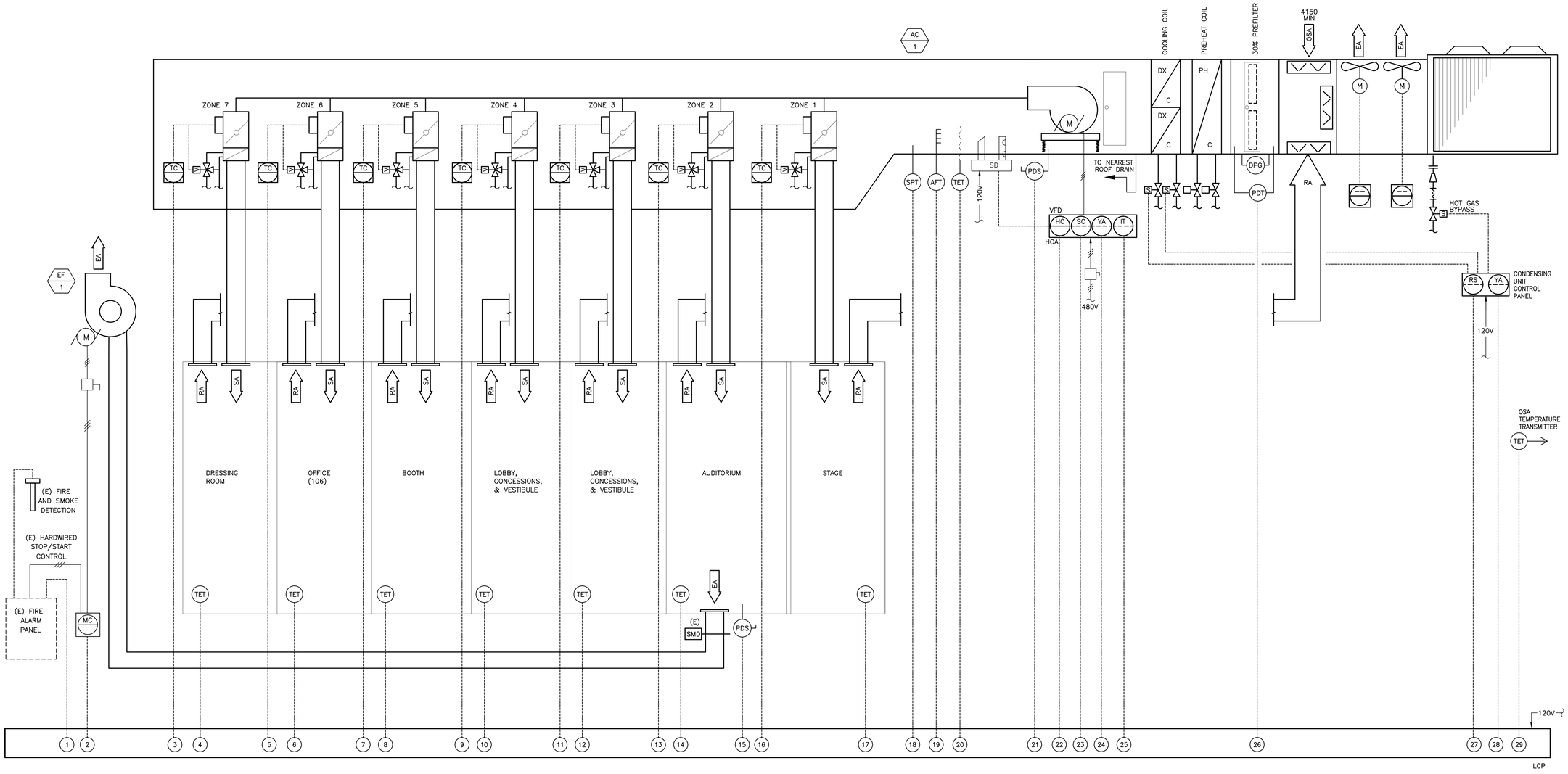

TYPICAL AIR HANDLER CONTROL DIAGRAM

POINT SCHEDULE

POINT	SIGNAL	DESCRIPTION	DISPLAY	ALARM	CONTROL FUNCTION
1	DI	FIRE ALARM	ON/OFF	YES	FIRE ALARM SIGNAL FOR HVAC SHUTDOWN
2	DO	MANUAL SMOKE FAN OPERATION	ON/OFF	YES	OUTPUT SIGNAL
3	AO	ROOM TEMPERATURE CONTROL	TEMP °F	YES	OUTPUT SIGNAL (P&ID) FOR VAV AND REHEAT CONTROL
4	AI	ZONE TEMPERATURE ELEMENT	TEMP °F	YES	ZONE TEMPERATURE CONTROL
5	AO	ROOM TEMPERATURE CONTROL	TEMP °F	YES	OUTPUT SIGNAL (P&ID) FOR VAV AND REHEAT CONTROL
6	AI	ZONE TEMPERATURE ELEMENT	TEMP °F	YES	ZONE TEMPERATURE CONTROL
7	AO	ROOM TEMPERATURE CONTROL	TEMP °F	YES	OUTPUT SIGNAL (P&ID) FOR VAV AND REHEAT CONTROL
8	AI	ZONE TEMPERATURE ELEMENT	TEMP °F	YES	ZONE TEMPERATURE CONTROL
9	AO	ROOM TEMPERATURE CONTROL	TEMP °F	YES	OUTPUT SIGNAL (P&ID) FOR VAV AND REHEAT CONTROL
10	AI	ZONE TEMPERATURE ELEMENT	TEMP °F	YES	ZONE TEMPERATURE CONTROL
11	AO	ROOM TEMPERATURE CONTROL	TEMP °F	YES	OUTPUT SIGNAL (P&ID) FOR VAV AND REHEAT CONTROL
12	AI	ZONE TEMPERATURE ELEMENT	TEMP °F	YES	ZONE TEMPERATURE CONTROL
13	AO	ROOM TEMPERATURE CONTROL	TEMP °F	YES	OUTPUT SIGNAL (P&ID) FOR VAV AND REHEAT CONTROL
14	AI	ZONE TEMPERATURE ELEMENT	TEMP °F	YES	ZONE TEMPERATURE CONTROL
15	AI	ROOM DIFFERENTIAL PRESSURE TRANSMITTER	IN WG	YES	MONITOR ROOM PRESSURE AND ALARM
16	AO	ROOM TEMPERATURE CONTROL	TEMP °F	YES	OUTPUT SIGNAL (P&ID) FOR VAV AND REHEAT CONTROL
17	AI	ZONE TEMPERATURE ELEMENT	TEMP °F	YES	ZONE TEMPERATURE CONTROL
18	AI	DUCT STATIC PRESSURE TRANSMITTER	IN WG	YES	DUCT PRESSURE MONITOR AND CONTROL VFD
19	AI	AIR FLOW TRANSMITTER	CFM	YES	MONITOR SUPPLY AIR FLOW RATE
20	AI	TEMPERATURE ELEMENT TRANSMITTER	TEMP °F	–	SUPPLY AIR TEMPERATURE MONITOR
21	DI	PRESSURE DIFFERENTIAL SWITCH	ON / OFF	YES	FAN STATUS VERIFICATION
22	DO	VFD CONTROL HOA	HOA	–	FAN ENABLE/DISABLE
23	AO	VFD SPEED CONTROL OUTPUT	RPM	–	FAN SPEED MODULATION (PID)
24	DI	VFD EVENT ALARM	FAULT	YES	VFD FAULT ALARM
25	AI	VFD HZ TRANSMITTER	%HZ	YES	VFD FAN SPEED
26	AI	FILTER – PRESSURE DIFFERENTIAL TRANSMITTER	IN WG	YES	PREFILTER HIGH STATIC PRESSURE ALARM
27	AO	TEMPERATURE CONTROL	SIGNAL	–	MODULATE HEATING AND COOLING CONTROL
28	DI	CONDENSER STATUS	ON/OFF	YES	MONITOR CONDENSER OPERATION
29	AI	OSA TEMPERATURE TRANSMITTER	TEMP. F	–	MONITOR OSA TEMPERATURE

AEPC Group, LLC
DESIGN • CONSTRUCTION • MANAGEMENT

Northern California Office
5000 Executive Parkway, Suite 475
San Ramon, CA 94583
Telephone: 925-277-3050 / Facsimile: 925-824-0102

ROOFING:

GALE

Gale Associates, Inc.
Engineers and Planners

2570 W. El Camino Real | Suite 320
Mountain View, Ca 94040
P 650.941.1112 F 650.941.1154 www.gainc.com

Boston Baltimore Orlando San Francisco

Registration Stamp

Client:

CITY OF SUNNYVALE CALIFORNIA

Project:

CITY of SUNNYVALE
PERFORMING ARTS CENTER
& CREATIVE ARTS CENTER
HVAC UPGRADE & ROOF
REPLACEMENT PROJECT

PROJECT NUMBER:
PR-08/03-08

Issued for

No.	Description	Issue Date
	RECORD SET	5-9-08

Designed by: Date:
Checked by: Date:
Drawn by: Date:
Approved by: Date:
Project #: SUNY-8-061
Scale: N.T.S.

MECHANICAL
P&ID FOR AC-1
CONTROL DIAGRAM

Drawing Number:

PA-M4.1

FILE: J:\AE\Project Files\SUNY Projects\SUNY-8-061 Theater-Craft HVAC Upgrade\Cad\Current\Theater Building\SUNY-8-061-PA-M4.1.dwg Jan 30, 2012 - 11:06am $(GETVAR,?") sshanley
XREF: SUNY-THEATER-XBRD.dwg

COPYRIGHT © 2002 AEPC GROUP, LLC

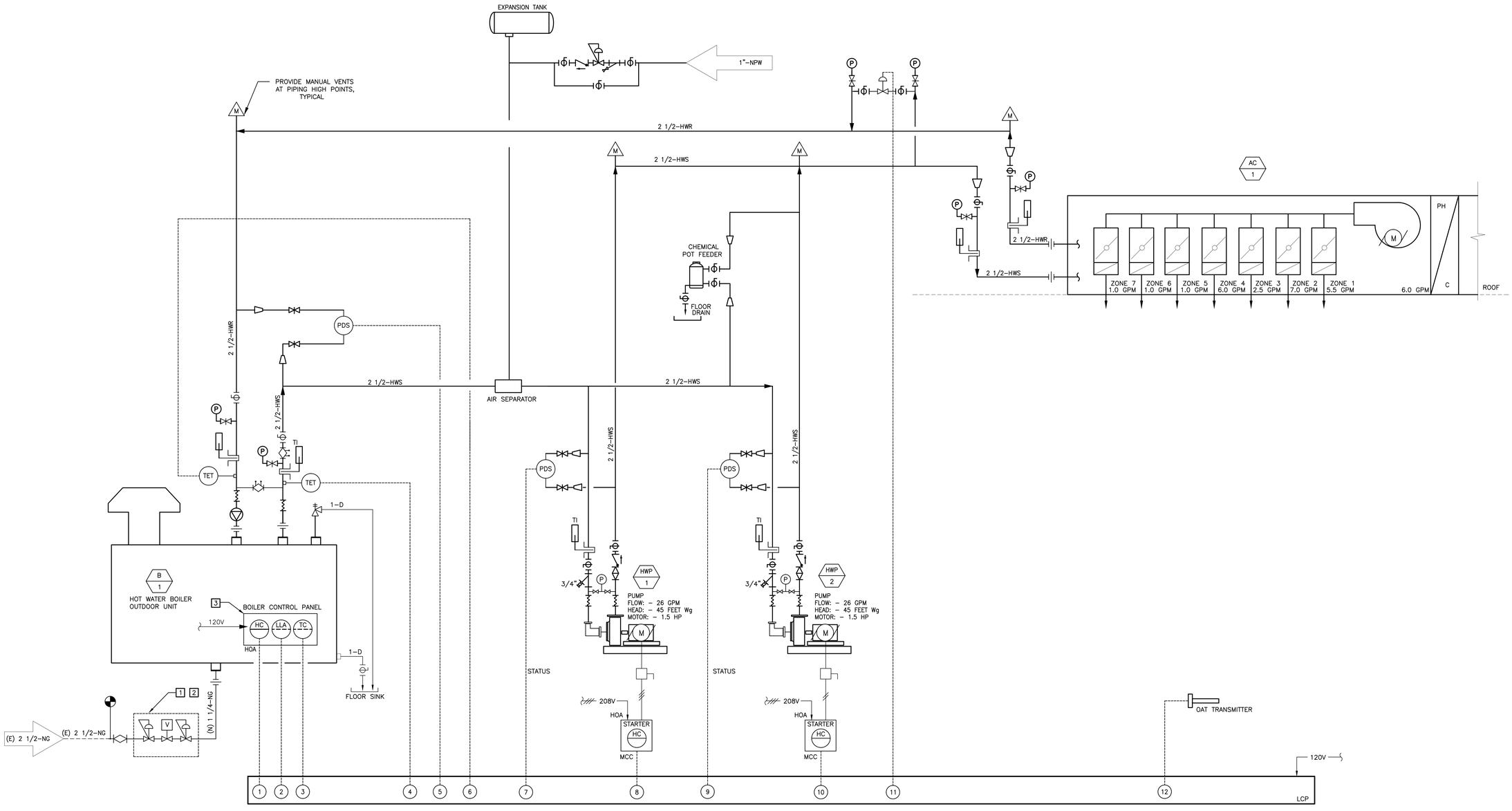

BOILER P&ID

SHEET NOTES:

1. GAS TRAIN ASSEMBLY BY BOILER MANUFACTURER.
2. PROVIDE VENTING OF ALL GAS REGULATORS TO THE OUTDOORS.
3. SEE SPECIFICATIONS FOR BOILER MANUFACTURER'S CONTROL PACKAGE.

BOILER POINT SCHEDULE

POINT	SIGNAL	DESCRIPTION	DISPLAY	ALARM	CONTROL FUNCTION
1	DO	BOILER CONTROL PANEL- HOA	HOA	-	BOILER SEQUENCE, ENABLE/DISABLE, MONITOR/RECORD
2	DI	BOILER CONTROL PANEL- EVENT ALARM	FAULT	YES	LOW WATER CUT-OFF FAULT
3	AO	BOILER CONTROL PANEL- TEMP CONTROLLER	TEMP °F	-	HOT WATER SUPPLY TEMPERATURE CONTROL (PID)
4	AI	TEMPERATURE ELEMENT TRANSMITTER	HOA	-	HOT WATER SUPPLY TEMPERATURE MONITOR
5	DI	DIFFERENTIAL PRESSURE SWITCH	ON / OFF	YES	PUMP STATUS
6	AI	TEMPERATURE ELEMENT TRANSMITTER	TEMP °F	YES	HOT WATER RETURN TEMPERATURE MONITOR/RECORD
7	DI	DIFFERENTIAL PRESSURE SWITCH	ON / OFF	YES	HOT WATER SUPPLY TEMPERATURE MONITOR
8	DO	PUMP CONTROL	HOA	-	PUMP ENABLE/DISABLE
9	DI	DIFFERENTIAL PRESSURE SWITCH	ON / OFF	YES	PUMP STATUS
10	DO	PUMP CONTROL	HOA	-	PUMP ENABLE/DISABLE
11	AO	BYPASS CONTROL VALVE	SIGNAL	-	MAINTAIN SECONDARY PRESSURE AND CONSTANT PRIMARY HW FLOW
12	AI	OUTSIDE AIR TEMPERATURE TRANSMITTER	TEMP °F	-	OUTSIDE AIR TEMPERATURE LOCKOUT CONTROL

AEPC Group, LLC
DESIGN • CONSTRUCTION • MANAGEMENT

Northern California Office
5000 Executive Parkway, Suite 475
San Ramon, CA 94583
Telephone: 925-277-3050 / Facsimile: 925-824-0102

ROOFING:

GALE

Gale Associates, Inc.
Engineers and Planners

2570 W. El Camino Real | Suite 320
Mountain View, Ca 94040
P 650.941.1112 F 650.941.1154 www.gainc.com

Boston Baltimore Orlando San Francisco

Registration Stamp

Client:

CITY OF SUNNYVALE CALIFORNIA

Project:

CITY of SUNNYVALE
PERFORMING ARTS CENTER & CREATIVE ARTS CENTER HVAC UPGRADE & ROOF REPLACEMENT PROJECT

PROJECT NUMBER: PR-08/03-08

Issued for

	RECORD SET	5-9-08

No. Description Issue Date

Designed by: Date:
Checked by: Date:
Drawn by: Date:
Approved by: Date:
Project #: SUNY-8-061
Scale: N.T.S.

MECHANICAL P&ID FOR B-1 HEATING HOT WATER CONTROL DIAGRAM

Drawing Number:

PA-M4.2

FILE: J:\AEV\Project Files\SUNY Projects\SUNY-8-061 Theater-Craft HVAC Upgrade\Cad\Current\Theater Building\SUNY-8-061-PA-M4.2.dwg Jun 30, 2012 - 11:14am $(GETVAR,"T") sshanley
XREF: SUNY-THEATER-XBRD.dwg

COPYRIGHT © 2002 AEPC GROUP, LLC

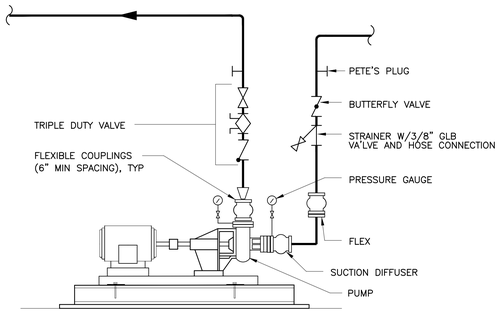

TYPICAL PUMP PIPING DETAIL (7 / –)

SCALE: N.T.S.

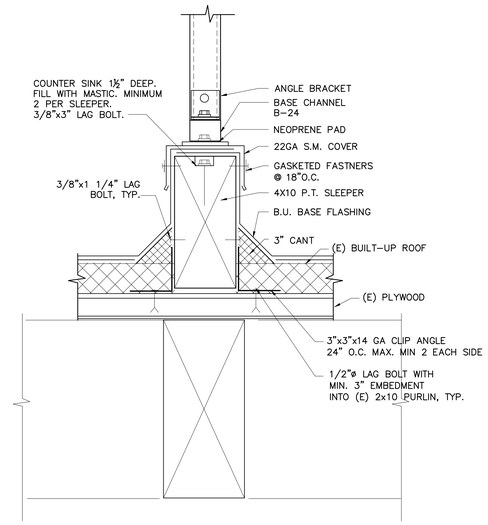

TYPICAL SLEEPER DETAIL (5 / -)

SCALE: N.T.S.

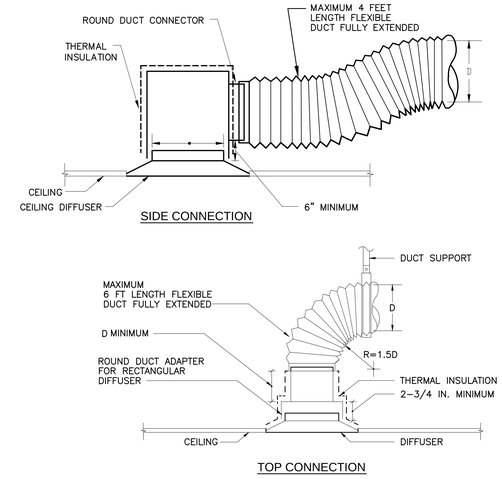

TYPICAL DIFFUSER CONNECTION DETAIL (1 / –)

SCALE: N.T.S.

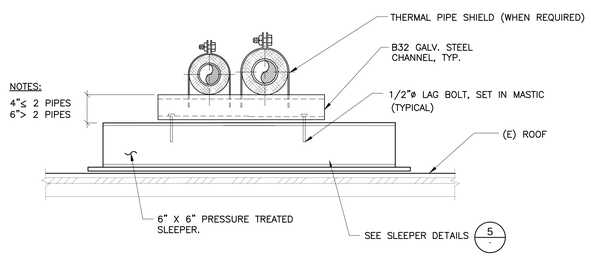

TYPICAL PIPE SUPPORT ON ROOF DETAIL (8 / –)

SCALE: NTS

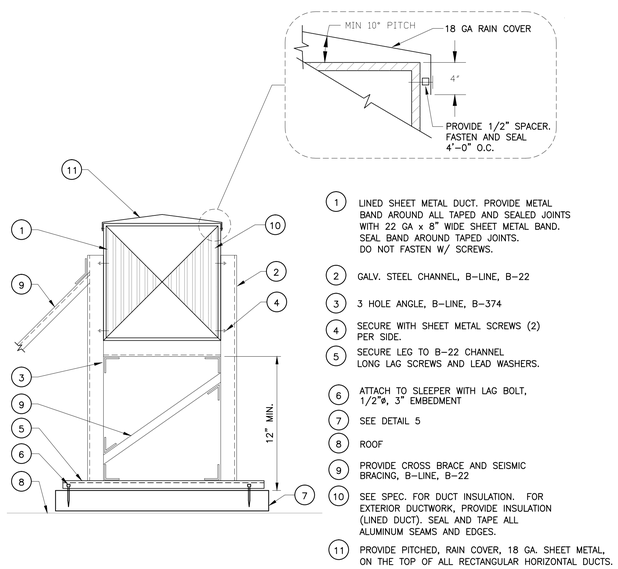

1. LINED SHEET METAL DUCT. PROVIDE METAL BAND AROUND ALL TAPED AND SEALED JOINTS WITH 22 GA x 8" WIDE SHEET METAL BAND. SEAL BAND AROUND TAPED JOINTS. DO NOT FASTEN W/ SCREWS.
2. GALV. STEEL CHANNEL, B-LINE, B-22
3. 3 HOLE ANGLE, B-LINE, B-374
4. SECURE WITH SHEET METAL SCREWS (2) PER SIDE.
5. SECURE LEG TO B-22 CHANNEL LONG LAG SCREWS AND LEAD WASHERS.
6. ATTACH TO SLEEPER WITH LAG BOLT, 1/2"ø, 3" EMBEDMENT
7. SEE DETAIL 5
8. ROOF
9. PROVIDE CROSS BRACE AND SEISMIC BRACING, B-LINE, B-22
10. SEE SPEC. FOR DUCT INSULATION. FOR EXTERIOR DUCTWORK, PROVIDE INSULATION (LINED DUCT). SEAL AND TAPE ALL ALUMINUM SEAMS AND EDGES.
11. PROVIDE PITCHED, RAIN COVER, 18 GA. SHEET METAL, ON THE TOP OF ALL RECTANGULAR HORIZONTAL DUCTS.

TYPICAL DUCT SUPPORT DETAIL (6 / -)

SCALE: N.T.S.

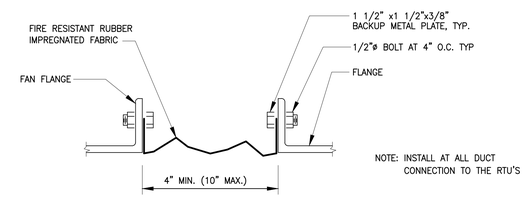

TYPICAL FLEXIBLE DUCT CONNECTION DETAIL (2 / –)

SCALE: N.T.S.

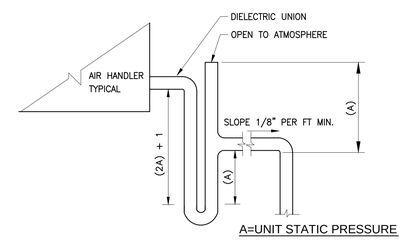

TYPICAL CONDENSATE DRAIN DETAIL (3 / -)

SCALE: N.T.S.

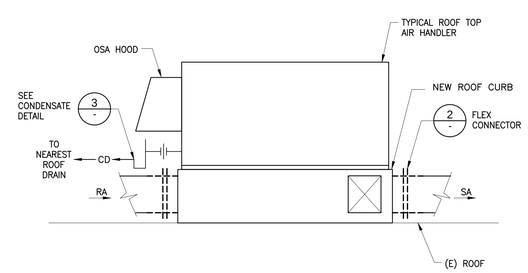

TYPICAL AIR HANDLER UNIT DETAIL (4 / M2.1)

SCALE: N.T.S.

AEPC Group, LLC
DESIGN • CONSTRUCTION • MANAGEMENT

Northern California Office
5000 Executive Parkway, Suite 475
San Ramon, CA 94583
Telephone: 925-277-3050 / Facsimile: 925-824-0102

ROOFING:

GALE

Gale Associates, Inc.
Engineers and Planners

2570 W. El Camino Real | Suite 320
Mountain View, Ca 94040
P 650.941.1112 F 650.941.1154 www.gainc.com

Boston Baltimore Orlando San Francisco

Registration Stamp

Client:

CITY OF SUNNYVALE CALIFORNIA

Project:

CITY of SUNNYVALE
PERFORMING ARTS CENTER
& CREATIVE ARTS CENTER
HVAC UPGRADE & ROOF
REPLACEMENT PROJECT

PROJECT NUMBER:
PR-08/03-08

Issued for

No.	Description	Issue Date
	RECORD SET	5-9-08

Designed by:		Date:	
Checked by:		Date:	
Drawn by:		Date:	
Approved by:		Date:	
Project #:	SUNY-8-061		
Scale:	N.T.S.		

MECHANICAL DETAILS

Drawing Number:

PA-M6.1

FILE: J:\AE\Project Files\SUNY Projects\SUNY-8-061 Theater-Craft HVAC Upgrade\Cad\Current\Theater Building\SUNY-8-061-PA-M6.1.dwg Jan 30, 2012 - 11:13am $(GETVAR,?') sshanley
XREF: SUNY-THEATER-XBRD.dwg

COPYRIGHT © 2002 AEPC GROUP, LLC

ELECTRICAL SYMBOLS (NOT ALL SYMBOLS APPLICABLE)

- RECESSED FLUORESCENT LIGHT FIXTURE
- FLUORESCENT EMERGENCY LIGHT FIXTURE.
- SURFACE FLUORESCENT LIGHT FIXTURE
- EXIT LIGHT, SINGLE FACE, CEILING MOUNTED.
- EXIT LIGHT, SINGLE FACE, WALL MOUNTED.
- WALL MOUNTED LIGHT
- CEILING MOUNTED DOWNLIGHT
- (E) CEILING MOUNTED EMERGENCY LIGHT
- (E) WALL MOUNTED EMERGENCY LIGHT
- PENDANT MOUNTED LIGHT FIXTURE
- (F1) LIGHTING FIXTURE IDENTIFICATION TAG
- LIGHT TRACK – APPROXIMATE LENGTH AS SHOWN ON DRAWINGS
- S_x SWITCH, SINGLE POLE 20A, 277V, HUBBELL NO. HBL1221I x INDICATES UNITS CONTROLLED. +42" AFF U.O.N.
- S_{2x} SWITCH, TWO POLE, 20A, 277V, HUBBELL NO. HBL1222I x INDICATES UNITS CONTROLLED. +42" AFF U.O.N.
- S_{TS} SPRING–WOUND MECHANICAL TIMER 0–6HRS. TORK #A506H.
- $ SINGLE–POLE DOUBLE–POLE MOMENTARY SWITCH FOR PROJECTION SCREEN OR DRAPERY CONTROL.
- S_M MANUAL MOTOR STARTER WITH OVERLOAD PROTECTION.
- S_{Dx} SWITCH, DIMMER 20A, 120V. x INDICATES UNITS CONTROLLED. LUTRON #NTF–40.
- POWER OUTLET SEE DRAWING FOR RATING & TYPE.(1PH)
- POWER OUTLET SEE DRAWING FOR RATING & TYPE.(3PH)
- RECEPTACLE, DUPLEX 20A, 125V, 1ø, STRAIGHT BLADE NEMA NO. 5–20R, HUBBELL NO. HBL5362I. +15" AFF U.O.N.
- CEILING MOUNTED RECEPTACLE
- RECEPTACLE, DOUBLE DUPLEX 20A, 125V, 1ø, STRAIGHT BLADE NEMA NO. 5–20R, HUBBELL NO. HBL5362I. +15" AFF U.O.N.
- GFCI DUPLEX RECEPTACLE WITH GROUND FAULT CIRCUIT INTERRUPTER + 6" ABOVE COUNTERTOP U.O.N.
- FLUSH FLOOR BOX WITH DUPLEX RECEPTACLE AND COMPARTMENT FOR 2–DATA OUTLETS – WALKER # RESOURCE–RFB
- WIREMOLD TYPE G4000 WITH QUAD,20A,125V,1ø AT EVERY 6'–0" MTD. AT 42" AFF.
- F FIRE ALARM HORN, & STROBE.
- F F FIRE ALARM STROBE LIGHT ONLY. WALL CEILING MOUNTED.
- F FIRE ALARM HORN ONLY
- F MANUAL PULL STATION – +38"
- TS PS TEMPER/PRESSURE SWITCH
- DSD DUCT SMOKE DETECTOR
- SFD SMOKE FIRE DAMPER
- WH 1 MECHANICAL EQUIPMENT DESIGNATION
- T THERMOSTAT
- X MOTOR, SINGLE PHASE – X DENOTES HORSEPOWER
- T TRANSFORMER X=KVA RATING
- X CONSTRUCTION NOTE
- TS DIGITAL TIMESWITCH, SPDT, 120 VOLT TORK #DGU100
- PC PHOTOCELL, TORK #EPC–1
- R RELAY, MECHANICALLY HELD WITH 120 VOLT COIL. SQUARE D #8501–X040XL–V02
- PANEL, 120/208/240 VOLT, 3PH, 4W. SURFACE MOUNTED.
- PANEL, 277/480 VOLT, 3PH, 4W. SURFACE MOUNTED.
- ELECTRIC CONDUIT RUN EXPOSED OR CONCEALED IN WALLS, OR ABOVE CEILING WHERE WALLS AND CEILING PERMIT.
- —T— TELECOMMUNICATION CONDUIT WITH PULL CORD
- – – – – CONDUIT RUN BELOW GRADE OR FLOOR
- —F— FIRE ALARM SYSTEM CONDUIT AND WIRE
- J JUNCTION OR OUTLET BOX WITH BLANK COVER – 4S UNLESS OTHERWISE NOTED
- OS OCCUPANCY SENSOR, WALL MOUNTED +38" AFF
- OS OCCUPANCY SENSOR, CEILING MOUNTED
- OS OCCUPANCY SENSOR, CEILING MOUNTED WITH POWER PACK
- P4–10 DESTINATION (PANEL–CIRCUIT NO.) CONDUIT (3/4" MIN. U.O.N.)
- GROUND CONDUCTOR, NEUTRAL CONDUCTOR, HOT CONDUCTORS: #12 WIRE U.O.N. NO HASH MARKS INDICATE 2#12 AND 1#12 GND.
- E EMERGENCY BATTERY PACK
- POWER POLE
- CR CARD READER STATION
- DC DOOR CONTACT POINT FOR SECURITY ALARM
- J RECEPTACLE DOUBLE DUPLEX,20A,125V, CEILING MOUNTED. SEE INSTALLATION DETAIL.
- SWITCH SAFETY, NON–FUSIBLE, 3–POLE, NEMA 1 U.O.N. 30 AMP, Y=SWITCH SIZE IN AMPS LINE VOLTAGE THERMOSTAT
- COMBINATION MOTOR STARTER WITH DISCONNECT SWITCH.
- MOTOR STARTER
- SWITCH SAFETY, FUSIBLE, 3–POLE, NEMA 1, U.O.N.
- REMOTE PENDANT STATION
- DEMOLITION DESIGNATION
- (MCC) MOTOR CONTROL CENTER

GENERAL ELECTRICAL NOTES (NOT ALL NOTES APPLICABLE)

1. ALL WORK SHALL COMPLY WITH THE CEC 2007 OR LATEST EDITION OF THE NATIONAL ELECTRICAL CODE AND ALL OTHER APPLICABLE FEDERAL, STATE, AND LOCAL CODES. WHERE THE PLANS SHOW MORE RESTRICTIVE REQUIREMENTS, THE PLANS SHALL GOVERN, BUT NOTHING ON THESE PLANS SHALL BE INTERPRETED AS AUTHORITY TO VIOLATE ANY CODE OR REGULATION.
2. ALL MATERIALS AND EQUIPMENT SHALL BE NEW AND SHALL BEAR THE UNDERWRITERS' LABORATORY LABEL (UL) 1990 PUBLICATION, ELECTRICAL CONSTRUCTION MATERIAL DIRECTORY, AND SHALL BE INSTALLED IN THE MANNER FOR WHICH THEY ARE DESIGNED AND APPROVED.
3. FLUORESCENT FIXTURES PROVIDED FOR THIS PROJECT SHALL INCLUDE ENERGY SAVING LAMPS AND ELECTRONIC BALLASTS THAT HAVE BEEN LISTED AS CERTIFIED BY THE CALIFORNIA ENERGY COMMISSION.
4. UNLESS OTHERWISE NOTED, ALL WIRE SHALL BE COPPER, STRANDED ONLY, UL LISTED, RATED FOR 600 VOLTS, TYPE THHN/THWN, NO. 12 AWG MINIMUM FOR POWER AND #14 AWG MINIMUM FOR CONTROL.
5. UNLESS OTHERWISE NOTED, CONDUIT TYPES SHALL BE EMT. MINIMUM SIZE 3/4" U.O.N.
6. THE CONTRACTOR SHALL INSTALL ALL CONDUITS AND WIRES WITH A MINIMUM NUMBER OF BENDS AND IN SUCH A MANNER AS TO CONFORM TO THE STRUCTURE, AVOID OBSTRUCTIONS, PRESERVE HEAD ROOM, KEEP OPENINGS AND PASSAGEWAYS CLEAR, AND MEET ALL STRUCTURAL CODE REQUIREMENTS.
7. ALL CONDUIT CONNECTIONS TO EQUIPMENT SUBJECT TO VIBRATION SHALL BE MADE WITH SEALTIGHT FLEX CONDUIT. PROVIDE SUFFICIENT SLACK TO ELIMINATE VIBRATION. ARRANGE CONNECTIONS TO PREVENT THE ENTRANCE OF MOISTURE.
8. THE ENTIRE ELECTRICAL INSTALLATION SHALL BE GROUNDED AS REQUIRED BY ALL APPLICABLE CODES. ALL CONDUIT RUNS SHALL INCLUDE A CODE SIZED GROUND WIRE WHETHER OR NOT SO INDICATED.
9. ALL BRANCH CIRCUITS SHALL INCLUDE A CODE SIZED GROUND WIRE. ISOLATED/DEDICATED BRANCH CIRCUITS SHALL INCLUDE A SEPARATE GROUND WIRE CONNECTED TO THE DESIGNATED SINGLE POINT GROUND FOR EACH DUPLEX OUTLET ON A CIRCUIT.
10. INSTALL ISOLATED CIRCUIT GROUND CONNECTIONS SO THAT NO ELECTRICAL CONNECTIONS IS MADE TO THE MAIN BODY OR THE NEUTRAL BUS OF A DISTRIBUTION PANEL. PROVIDE SINGLE POINT GROUNDING WHERE INDICATED ON THE DRAWINGS.
11. ALL TERMINATION POINTS WILL HAVE SCREW–IN, CLAMP–TYPE CONNECTIONS, UNLESS OTHERWISE PRIOR APPROVAL IS GIVEN BY CLIENT'S FACILITIES REPRESENTATIVE.
12. THE ENTIRE WIRING SYSTEM TO BE TESTED FOR SHORT CIRCUITS, GROUNDS, AND INSULATION RESISTANCE BETWEEN CONDUCTORS AND TO GROUND.
13. THE CONTRACTOR SHALL PROVIDE SUPPORT FOR ALL FIXTURES AND ELECTRICAL EQUIPMENT TO COMPLY WITH THE SEISMIC REQUIREMENTS OF THE UNIFORM BUILDING CODE AND ALL LOCAL ORDINANCES.
14. PROVIDE A MANUAL DISCONNECTING MEANS, CAPABLE OF BEING LOCKED IN THE OPEN POSITION, AT MOTOR FOR ALL MOTORS NOT WITHIN SIGHT OF OR MORE THAN TWENTY–FIVE (25) FEET FROM ITS CONTROLLER.
15. ALL CIRCUIT BREAKERS, FUSES, AND ELECTRICAL EQUIPMENT SHALL HAVE AN INTERRUPTING RATING NOT LESS THAN THE MAXIMUM SHORT CIRCUIT CURRENT TO WHICH THEY MAY BE SUBJECTED & NO LESS THAN THE WITHSTAND RATING OF THE BUS THEY ARE CONNECTED TO.
16. PROVIDE A NAMEPLATE FOR EACH INDIVIDUALLY MOUNTED CIRCUIT BREAKER OR DISCONNECT SWITCH, ELECTRICAL PANELS, TRANSFORMERS, DISTRIBUTION BOARDS, ETC, PULL BOX, ARKTITE RECEPTACLE, AND FOR ANY OTHER CONTROL DEVICE OR MAJOR ITEM OF ELECTRICAL EQUIPMENT AS FOLLOWS:

    1 –– PROVIDE LAMINATED NAMEPLATES ENGRAVED IN 1/4" HIGH LETTERS TO CORRESPOND WITH THE DESIGNATION ON THE DRAWINGS. PROVIDE OTHER OR ADDITIONAL INFORMATION ON NAMEPLATES WHERE INDICATED. ORANGE FOR 480V.

    2 –– ATTACH NAMEPLATES TO EQUIPMENT WITH RIVETS, BOLTS, OR APPLICABLE SHEET METAL SCREWS. GLUE–ON TYPES AND POP–RIVETS TYPE ARE NOT ACCEPTABLE.

    LABEL ALL RECEPTACLES, OUTLETS, JUNCTION BOXES, WITH DYMO–TYPE EMBOSSED TAPE AS FOLLOWS:

    1 –– RECEPTACLES AND JUNCTION BOXES: PANEL AND CIRCUIT NUMBER.

    2 –– USE BLACK TAPE FOR 240V AND LESS.

    3 –– USE ORANGE TAPE FOR 277V AND ABOVE.

    INDICATE ON THE DEVICE IF THE CIRCUIT IS DEDICATED OR ISOLATED.
17. PROVIDE UPDATED, TYPED CIRCUIT BREAKER PANEL SCHEDULES THAT ACCURATELY REFLECT ALL CHANGES MADE.
18. THE ELECTRICAL DRAWINGS ARE DIAGRAMMATIC AND DO NOT SHOW ALL OFFSETS, BENDS, FITTINGS, JUNCTION BOXES, PULL BOXES, AND EXPANSION FITTINGS REQUIRED TO MEET FIELD CONDITIONS. CONTRACTOR SHALL DETERMINE ACTUAL MATERIAL AND HARDWARE REQUIREMENTS AND VERIFY ALL DIMENSIONS.
19. CONTRACTOR SHALL PROVIDE PULL LINE IN ALL EMPTY CONDUITS.
20. FUNCTIONALLY TEST THE ELECTRICAL INSTALLATION FOR PROPER OPERATION AND ROTATION.
21. FURNISH AND INSTALL ALL CONDUITS, WIRES, BOXES, SWITCHES, LIGHT FIXTURES (WITH LAMPS), RECEPTACLES, SERVICE DEVICES, PANELBOARDS AND OTHER EQUIPMENT SHOWN ON THE DRAWINGS AS REQUIRED FOR A COMPLETE AND OPERATIONAL ELECTRICAL SYSTEM.
22. LOCATIONS SHOWN ON THE ARCHITECTURAL AND MECHANICAL DRAWINGS SHALL TAKE PRECEDENCE OVER THOSE SHOWN ON THE ELECTRICAL DRAWINGS. REFER TO THE REFLECTED CEILING PLAN AND THE ARCHITECTURAL FLOOR PLANS FOR EXACT LOCATIONS OF DEVICES. REFER TO THE MECHANICAL DRAWINGS FOR LOCATIONS OF HEATING, VENTILATING AND AIR CONDITIONING EQUIPMENT, PLUMBING, FIRE SUPPRESSION EQUIPMENT, ETC. VERIFY EXISTING SITE CONDITIONS, SERVICE REQUIREMENTS, AND EXACT LOCATIONS OF SERVICE FACILITIES BEFORE SUBMITTING BID.
23. INDEPENDENTLY SUPPORT ALL CONDUIT ABOVE SUSPENDED CEILING. SEISMIC WIRES ARE NOT TO BE USED FOR SUPPORT.
24. CONTRACTOR SHALL BE ALLOWED TO COMBINE CIRCUIT HOMERUNS. HOMERUNS SHALL NOT BE ALLOWED TO EXCEED MORE THAN THREE PHASE CONDUCTORS. ALL PHASE CONDUCTORS MUST BE FROM EACH OF THREE PHASES PROVIDED. WHERE NOT OTHERWISE REQUIRED A DOUBLE SIZED NEUTRAL SHALL BE INSTALLED TO BE SHARED BY ALL THREE PHASES.
25. PROVIDE PHASE ROTATION SIGN INSIDE ALL 480V PANEL BOARDS.
26. PROVIDE COLOR CODED AS SHOWN:

COLOR CODE WILL BE CARRIED THROUGHOUT ALL BRANCHES ON A SINGLE CIRCUIT.

	APPLICATION	COLOR CODING
1.	3–PHASE – 480/277 VOLT	A = BROWN B = ORANGE C = YELLOW NEUTRAL = WHITE GROUND = GREEN
2.	3–PHASE – 120/208 VOLT	A = BLACK B = RED C = BLUE NEUTRAL = WHITE GROUND = GREEN
3.	1–PHASE – 120 VOLT ISOLATED CIRCUIT (ORANGE RECEPTACLE ONLY)	HOT = ORANGE NEUTRAL = WHITE GROUND = GREEN
4.	1–PHASE – 120 VOLT CIRCUIT	HOT = BLACK, RED, OR BLUE DEPENDING ON PHASE NEUTRAL = WHITE
5.	DOOR SWITCHES	HOT = RED SWITCHED = BLUE
6.	FIRE CIRCUITS	RED

DEMOLITION NOTES

1. UNDER THIS SECTION, THE CONTRACTOR BEFORE SUBMITTING BID SHALL VISIT THE SITE, REVIEW ANY EXISTING DRAWINGS AVAILABLE AND ALLOW FOR ALL DEMOLITION THAT IS NECESSARY FOR COMPLETE INSTALLATION OF NEW ELECTRICAL WORK.
2. REMOVE ALL ABANDONED WIRING AND EQUIPMENT. SUCH ITEMS WILL EITHER BE STORED AT A PREDETERMINED LOCATION OR REMOVED FROM THE PREMISES AS DIRECTED BY THE OWNER.
3. EXISTING CONDUIT, FITTINGS, WIRE, ETC, REMOVED FROM THE EXISTING FACILITY SHALL NOT BE REUSED UNLESS SPECIFICALLY APPROVED BY OWNER.
4. WHEREVER EXISTING WIRING OR EQUIPMENT IS ABANDONED AS A RESULT OF THIS CONTRACT, IT SHALL BE REMOVED IN SO FAR AS POSSIBLE. THIS INCLUDES BUT IS NOT LIMITED TO:
   A. REMOVE ALL WIRE AND CABLE
   B. REMOVE ALL DEVICES AND EQUIPMENT.
   C. REMOVE ALL EXPOSED CONDUIT AS FAR AS POSSIBLE.
   D. CUT OFF AND CAP ALL ABANDONED CONDUIT. STUBS SHALL NOT BE EXTENDED ABOVE FLOOR.
   E. PROVIDE CLOSURE PLATES FOR ALL ABANDONED FLUSH OUTLETS.
   F. REMOVE ALL ABANDONED ELECTRICAL AND TELEPHONE CABINETS.
5. WHERE REMOVAL OF EXISTING OUTLET OR EQUIPMENT FEED WILL RESULT IN LOSS OF CIRCUIT CONTINUITY, THE ISOLATED PORTIONS OF THE CIRCUIT OR FEED SHALL BE RECONNECTED TO PROVIDE SERVICE TO ALL OUTLETS AND EQUIPMENT. IF SITE CONDITIONS MAKE RECONNECTION IMPOSSIBLE, CONNECTION SHALL BE MADE FROM AN ADJACENT AVAILABLE POWER SOURCE AS NOTED AND/OR DIRECTED BY OWNER.

ELECTRICAL ABBREVIATIONS

A	AMPERE
AFF	ABOVE FINISHED FLOOR
ARCH	ARCHITECTURAL
A/V	AUDIO VISUAL
BLDG.	BUILDING
C	CONDUIT
CB	CIRCUIT BREAKER
CKT	CIRCUIT
CLG.	CEILING
CO	CONDUIT ONLY
CU	COPPER
DWG	DRAWING
DEMO	DEMOLITION
(E)	EXISTING
(ERL)	EXISTING TO BE RELOCATED
ELEC	ELECTRIC(AL)
EMT	ELECTRIC METALLIC TUBING
EP	EXPLOSION PROOF
(ER)	EXISTING TO REMAIN
F	FUSED
FA	FIRE ALARM
FACP	FIRE ALARM CONTROL PANEL
FIXT	FIXTURE
FLA	FULL LOAD AMPERES
FLEX	FLEXIBLE
FSS	FUSED SAFETY SWITCH
FT	FOOT OR FEET
G; GND	GROUND(ED)
GFCI	GROUND FAULT CIRCUIT INTERRUPTER
HOA	HAND–OFF–AUTOMATIC
HP	HORSEPOWER
HT	HEIGHT
IMC	INTERMEDIATE METAL CONDUIT
JB	JUNCTION BOX
KAIC	AMPERE INTERRUPTING CAPACITY, IN THOUSANDS
LEL	LOWER EXPLOSION LEVEL
LCP	LOCAL CONTROL PANEL (HVAC)
LDA	LIGHTING DESIGN ALLIANCE
LT(G)	LIGHT(ING)
MCB	MAIN CIRCUIT BREAKER
MECH	MECHANICAL
MIN	MINIMUM
MLO	MAIN LUGS ONLY
MTD	MOUNTED
(N)	NEW
NE	NON ELECTRICAL
NEUT	NEUTRAL
NEC	NATIONAL ELECTRICAL CODE
NL	NIGHT LIGHT
NFSS	NON FUSED SAFETY SWITCH
NTS	NOT TO SCALE
P	POLE
PNL	PANEL
RECEPT	RECEPTACLE
REF	REFERENCE
RGC	RIGID GALVANIZED STEEL CONDUIT
REQ	REQUIRED
RM	ROOM
SC	SHORT CIRCUIT
SM	MANUAL MOTOR SWITCH
SPC	SPACE
SPEC	SPECIFICATION(S)
SPR	SPARE
STAT	STATION
SWGR	SWITCHGEAR
TEL	TELEPHONE
TTB	TELEPHONE TERMINAL BACKBOARD
TYP	TYPICAL
U.O.N.	UNLESS OTHERWISE NOTED
UTY	UTILITY
VFD	VARIABLE FREQUENCY DRIVE
W/	WITH
WP	WEATHERPROOF
XFMR/TR	TRANSFORMER

AEPC Group, LLC
DESIGN • CONSTRUCTION • MANAGEMENT

Northern California Office
5000 Executive Parkway, Suite 475
San Ramon, CA 94583
Telephone: 925-277-3050 / Facsimile: 925-824-0102

ROOFING:

GALE

Gale Associates, Inc.
Engineers and Planners

2570 W. El Camino Real | Suite 320
Mountain View, Ca 94040
P 650.941.1112 F 650.941.1154 www.gainc.com

Boston Baltimore Orlando San Francisco

Registration Stamp

Client:

CITY OF SUNNYVALE CALIFORNIA

Project:

CITY of SUNNYVALE
PERFORMING ARTS CENTER & CREATIVE ARTS CENTER HVAC UPGRADE & ROOF REPLACEMENT PROJECT
PROJECT NUMBER: PR-08/03-08

Issued for

	RECORD SET	5-9-08

No.	Description	Issue Date

Designed by: Date:
Checked by: Date:
Drawn by: Date:
Approved by: Date:
Project #: SUNY–8–061
Scale: N.T.S.

ELECTRICAL LEGEND, ABBREVIATIONS, NOTES & SYMBOLS

Drawing Number:

PA-E0.1

FILE: J:\AE\Project Files\SUNY Projects\SUNY-8-061 Theater-Craft HVAC Upgrade\Cad\Current\Theater Building\SUNY-8-061-PA-E0.1.dwg Jan 30, 2012 - 10:54am $(GETVAR,?) sshanley
XREF: SUNY- THEATER-XGRID.dwg

COPYRIGHT © 2002 AEPC GROUP, LLC

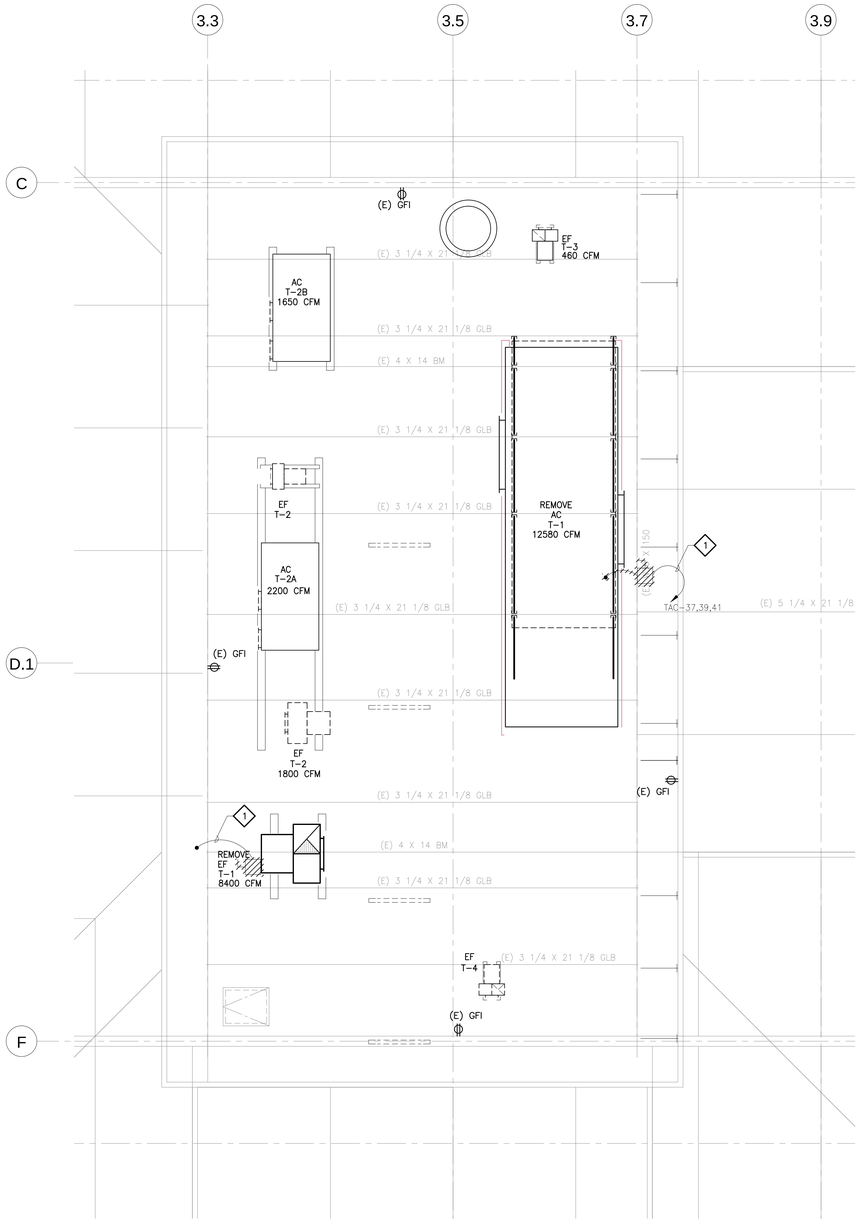

ROOF DEMOLITION PLAN

SCALE: 1/4"=1'-0"

1
-

N

0 1' 2' 4' 8'
SCALE: 1/4"=1'-0"

DEMOLITION NOTE:

1 SALVAGE THE EXISTING CIRCUIT FOR REUSE.

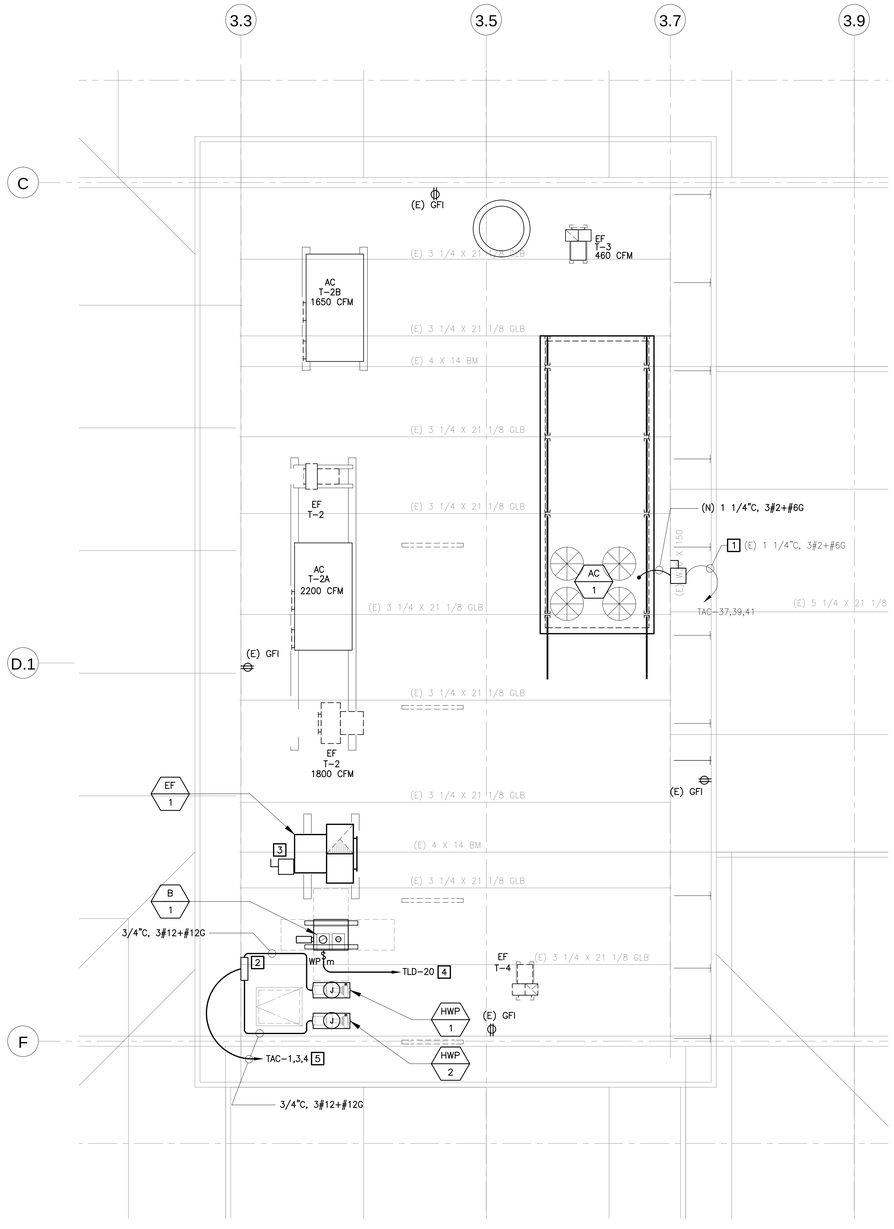

ROOF PLAN

SCALE: 1/4"=1'-0"

2
-

N

0 1' 2' 4' 8'
SCALE: 1/4"=1'-0"

KEYED NOTES:

1. REUSE EXISTING CIRCUIT & WIRING TO FEED NEW AC-1. PROVIDE 200A/3P/480V/NEMA 3R/HP RATED DISCONNECT SWITCH.
2. HOT WATER PUMP CONTROLLERS TO BE PROVIDED UNDER DIVISION 15 AND INSTALLED BY THE ELECTRICAL CONTRACTOR.
3. RECONNECT THE EXISTING CIRCUIT TO FEED NEW EF-1. PROVIDE NEW DISCONNECT SWITCH. THE ELECTRICAL CONTRACTOR TO VERIFY THE OVERLOAD RELAY TO MATCH NEW EF-1 MOTOR FLA.
4. PROVIDE 20A/1P CIRCUIT BREAKER IN SPACE 20 OF PANEL TLD.
5. PROVIDE 15A/3P CIRCUIT BREAKER IN SPACES 1, 3 & 5 OF PANEL TAC.

AEPC Group, LLC
DESIGN • CONSTRUCTION • MANAGEMENT

Northern California Office
5000 Executive Parkway, Suite 475
San Ramon, CA 94583
Telephone: 925-277-3050 / Facsimile: 925-824-0102

ROOFING:

GALE

Gale Associates, Inc.
Engineers and Planners

2570 W. El Camino Real | Suite 320
Mountain View, Ca 94040
P 650.941.1112 F 650.941.1154 www.gainc.com

Boston Baltimore Orlando San Francisco

Registration Stamp

Client:

CITY OF SUNNYVALE CALIFORNIA

Project:

CITY of SUNNYVALE
PERFORMING ARTS CENTER
& CREATIVE ARTS CENTER
HVAC UPGRADE & ROOF
REPLACEMENT PROJECT

PROJECT NUMBER:
PR-08/03-08

Issued for

	RECORD SET	5-9-08

No.	Description	Issue Date

Designed by:	Date:
Checked by:	Date:
Drawn by:	Date:
Approved by:	Date:
Project #: SUNY-8-061	
Scale: N.T.S.	

ELECTRICAL
ROOF PLAN

Drawing Number:

PA-E2.1

FILE: J:\AE\Project Files\SUNY Project\SUNY-8-061 Theater-Craft HVAC Upgrade\Cad\Current\Theater Building\SUNY-8-061-PA-E2.1.dwg Jan 30, 2012 - 10:53am $(GETVAR,"T") sshanley
XREF: SUNY-THEATER-XBRD.dwg X-GRID.dwg X-ROOF.dwg X-HVAC-Roof-Exist.dwg X-HVAC-Roof-New.dwg

COPYRIGHT © 2002 AEPC GROUP_LLC

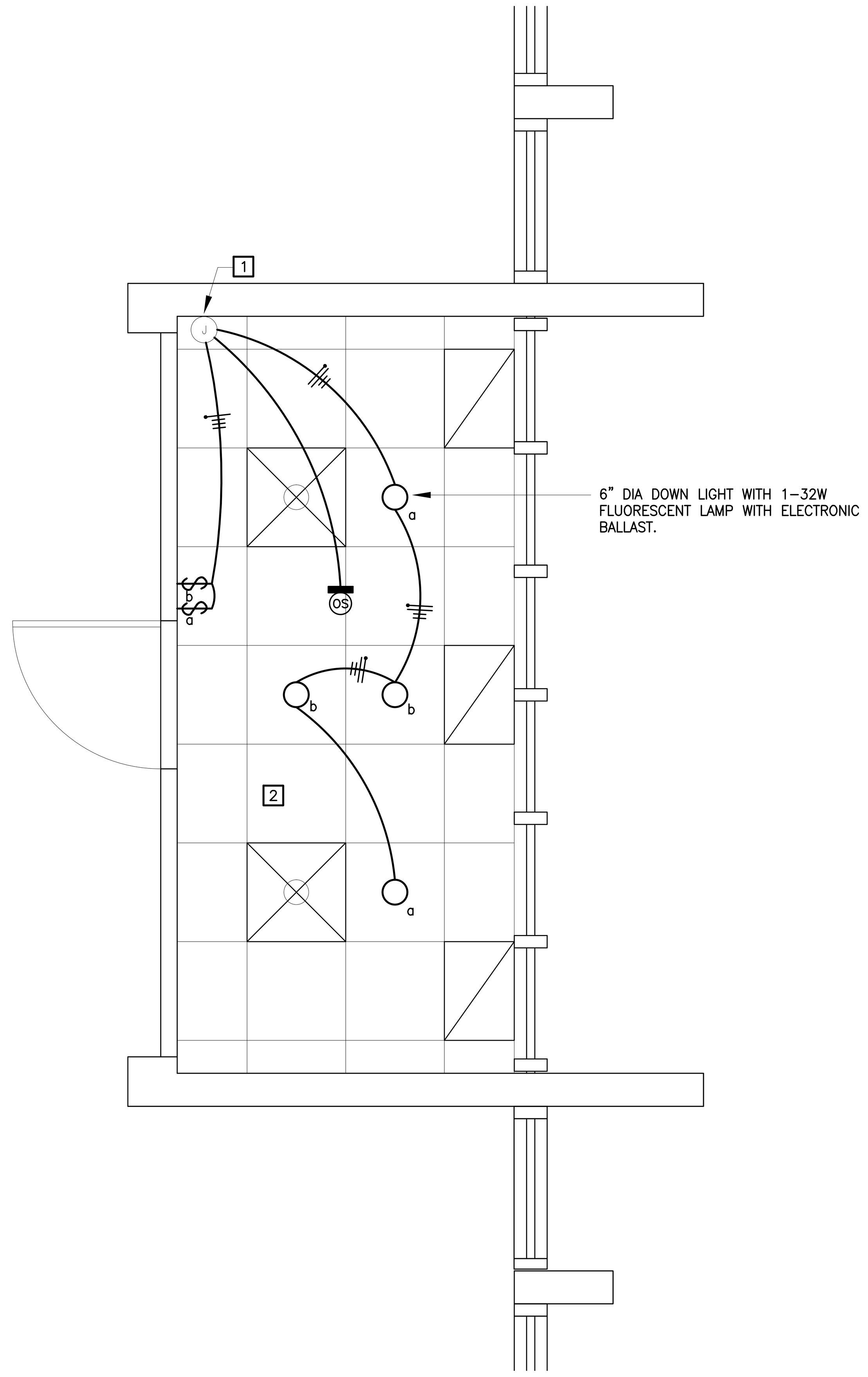

PARTIAL FIRST FLOOR PLAN - BOX OFFICE

SCALE: 1/2"=1'-0"

1 / -

N

0 1' 2' 4'
SCALE: 1/2"=1'-0"

Panel Schedule

PANELBOARD IDENTIFICATION: TAC (E) — SECTION NUMBER 1 OF 1 — PANEL TYPE: LIGHTING AND APPLIANCE / ✓ POWER & DISTRIBUTION

LOCATION: ELECTRICAL ROOM — MOUNTING: SURFACE — MAIN: 225A — BUS: 225A — VOLTS: 480/277 — PHASE: — WIRE:

PROTECTIVE DEVICES: RMS SYMMETRICAL AMPS MINIMUM — GROUND BUS REQUIRED: ✓ YES / NO

DESCRIPTION	VOLT-AMP A	VOLT-AMP B	VOLT-AMP C	BREAKER AMP	BREAKER POLE	CKT POLE #	CKT POLE #	BREAKER AMP	BREAKER POLE	VOLT-AMP A	VOLT-AMP B	VOLT-AMP C	DESCRIPTION
HOT WATER PUMP CONTROLLER	0.5			15		1	2	20		0.8			E PFR
		0.5				3	4				0.8		
			0.5		3	5	6		3			0.8	
E AC-T2	5.2			40		7	8	30		5.0			E DUST COLLECTOR
		5.2				9	10				5.0		
			5.2		3	11	12		3			5.0	
E AC-T3	4.1			40		13	14	50		10.0			E 30 KVA XFMR
		4.1				15	16				10.0		
			4.1		3	17	18		3			10.0	
E SPARE	0.0			20		19	20	30	1	3.5			E AC-T5
		0.0				21	22	20			0.0		E SPARE
			0.0		3	23	24					0.0	
				20		25	26		3	0.0			
						27	28	20	1		1.0		E LOAD
					3	29	30	20	1			1.0	E LOAD
				20		31	32	20	1	1.0			E LOAD
						33	34	20	1		0.0		E SPARE
					3	35	36	20	1			0.0	E SPARE
NEW AC-1	32.7			150		37	38	-	-	-			
		32.7				39	40	-	-		-		
			32.7		3	41	42	-	-			-	

VOLT-AMPERES TOTAL: BUS A 43 BUS B 43 BUS C 43 ODD; 23 17 17 EVEN

SUBTOTALS 66 59 59 = TOTAL LOAD 184.74 KVA

LINE AMPS TOTAL = 222.471

LINE AMPS LARGEST PHASE 79.5

CERTIFICATE OF COMPLIANCE (Part 1 of 4) LTG-1-C

PROJECT NAME: Performing Arts Center HVAC Upgrade	DATE: 6/15/2007
PROJECT ADDRESS: Remington Drive and Michelangelo Drive, Sunnyvale, CA	Building Permit #
PRINCIPAL DESIGNER - LIGHTING: Ali Khan — TELEPHONE: (925) 277-3050	Checked by/Date
DOCUMENTATION AUTHOR: Ali Khan — TELEPHONE: (925) 277-3050	Enforcement Agency Use

GENERAL INFORMATION

DATE OF PLANS: 6/15/2007 — BUILDING CONDITIONED FLOOR AREA: 120 sqft — CLIMATE ZONE: 4

BUILDING TYPE: ☒ NONRESIDENTIAL ☐ HIGH RISE RESIDENTIAL ☐ HOTEL/MOTEL GUEST

☒ CONDITIONED SPACES ☐ UNCONDITIONED SPACES ☐ INDOOR/OUTDOOR SIGNS

PHASE OF CONSTRUCTION: ☐ NEW ☐ ADDITION ☒ ALTERATION

METHOD OF COMPLIANCE

☐ PERFORMANCE ☐ COMPLETE BUILDING ☒ AREA CATEGORY ☐ TAILORED ☐ COMMON LIGHTING

STATEMENT OF COMPLIANCE

This Certificate of Compliance lists the building features and performance specifications needed to comply with Title 24, Parts 1 and 6 of the California Code of Regulations. This certificate applies only to building lighting requirements.
The documentation preparer hereby certifies that the documentation is accurate and complete.

DOCUMENTATION AUTHOR: Ali Khan — SIGNATURE: — DATE: 6/15/2007

The Principal Lighting Designer hereby certifies that the proposed building design represented in this set of construction documents is consistent with the other compliance forms and worksheets, with the specifications, and with any other calculations submitted with this permit application. The proposed building has been designed to meet lighting requirements contained in applicable parts of Sections 110, 119, 130-132, 146, & 149 of Title 24, Part 6.

- ☐ The plans & specifications meet the requirements of Part 6 (Sections 10-103a). ☐ The installation certificates meet the requirements of Part 6 (10-103a 3).
- ☐ The operation & maintenance information meet the requirements of Part 6 (10-103c).
  Please check one: (These sections of the Business and Professions Code are printed in full in the Nonresidential Manual.)
- ☒ I hereby affirm that I am eligible under the provisions of Division 3 of the Business and Professions Code to sign this document as the person responsible for its preparation; and that I am licensed in the State of California as a civil engineer or electrical engineer, or I am a licensed architect.
- ☐ I affirm that I am eligible under the provisions of Division 3 of the Business and Professions Code by section 5537.2 or 6737.3 to sign this document as the person responsible for its preparation; and that I am a licensed contractor performing this work.
- ☐ I affirm that I am eligible under Division 3 of the Business and Professions Code to sign this document because it pertains to a structure or type of work described as exempt pursuant to Business and Professions Code Sections 5537, 5538 and 6737.1.

PRINCIPAL LIGHTING DESIGNER - NAME: Ali Khan — SIGNATURE: — DATE: 6/15/2007 — LIC. #: E17115

LIGHTING MANDATORY MEASURES

☐ Indicate location on plans of Note Block for Mandatory Measures — Sheet E2.2

LIGHTING COMPLAINCE FORMS & WORKSHEETS (check box if worksheet is included)

☒	LTG-1-C, Parts 1 of 4 and 2 of 4	Certificate of Compliance. Parts 1 of 4 and 2 of 4 are required for all submittals
☐	LTG-1-C, Part 3 of 4	Certificate of Compliance. Part 3 of 4 submittal is required only if Control Credits are claimed
☒	LTG-1-C, Part 4 of 4	Certificate of Compliance. Part 4 of 4 submittal is required when lighting controls are installed
☒	LTG-2-C	Interior Lighting Schedule
☐	LTG-3-C	Portable Lighting Worksheet
☐	LTG-4-C	Lighting Controls Credit Worksheet
☒	LTG-5-C	Interior Lighting Power Allowance
☐	LTG-6-C	Tailored Method Worksheet
☐	LTG-7-C	Room Cavity Ratio Worksheet
☐	LTG-8-C	Common Lighting Systems Method Worksheet
☐	LTG-9-C	Line Voltage Track Lighting Worksheet
☐	OLTG-1-C	Signs (See OLTS-1-C Sign Worksheet in Chapter 6, Outdoor Lighting and Signs Chapter)

2005 Nonresidential Compliance Forms — April 2005

SHEET NOTES:

1. USE (E) LIGHTING CIRCUIT AVAILABLE IN THE (E) J-BOX.
2. DEMOLISH (E) LIGHTING FIXTURES.

INTERIOR LIGHTING POWER ALLOWANCE LTG-5

PROJECT NAME: Performing Arts Center HVAC Upgrade — DATE: 6/15/2007

ALLOWED LIGHTING POWER (Choose One Method)

COMPLETE BUILDING METHOD– CONDITIONED SPACES

BUILDING CATEGORY (From § 146 Table 146-B)	WATTS PER (sqft)	COMPLETE BLDG. AREA	ALLOWED WATTS

AREA CATEGORY METHOD – CONDITIONED SPACES

A	B	C	D
AREA CATEGORY (From § 146 Table 146-C)	WATTS PER (sqft)	AREA (sqft)	ALLOWED WATTS
Theaters - Motion picture	1.3	120	156
			0
			0
			0
			0
			0
			0
			0
			0
			0
			0
			0
			0
			0
			0
			0
	TOTALS	120 AREA	156 WATTS

TAILORED METHOD– CONDITIONED SPACES

TOTAL ALLOWED WATTS (From LTG-6-C): 0

UNCONDITIONED SPACES

A	B	C	D
Complete Building and Area Category Methods CATEGORY (From § 146 Table 146-B & C)	WATTS PER (sqft)	AREA (sqft)	ALLOWED WATTS
			0
			0
			0
			0
			0
			0
	TOTALS	0 AREA	0 WATTS

TAILORED METHOD– UNCONDITIONED SPACES

TOTAL UNCONDITIONED SPACES ALLOWED WATTS (From LTG-5-C and LTG-6-C): 0

INTERIOR LIGHTING SCHEDULE (Part 1 of 2) LTG-2-C

PROJECT NAME: Performing Arts Center HVAC Upgrade — DATE: 6/15/2007

INSTALLED LIGHTING POWER FOR CONDITIONED SPACES

Luminaire A	B	Lamps/Ballasts C	D	E	F	Installed Watts G	H	I	J
Name	Type Description	Lamp Type	Number of Lamps per Luminaire	Watts Per Lamp	Number of Ballast per Luminaire	Watts per Luminaire	x If CEC Default	Number of Luminaires	Installed Watts (GxI)
A	DOWNLIGHT	FLUOR.	1	32	1	34		4	136

PAGE TOTAL	136
BUILDING TOTAL (sum of all pages for conditioned spaces)	+ 136
PORTABLE LIGHT (From LTG-3-C)	+ 0
CONTROL CREDIT (From LTG-4-C)	- 0
ADJUSTED ACTUAL WATTS	= 136

2005 Nonresidential Compliance Forms — April 2005

CERTIFICATE OF COMPLIANCE (Part 4 of 4) LTG-1-C

PROJECT NAME: Performing Arts Center HVAC Upgrade — DATE: 6/15/2007

Designer:

This form is to be used by the designer and attached to the plans. Listed below are all the acceptance tests for lighting systems. The designer is required to check the boxes by all acceptance tests that apply and list all equipment that require an acceptance test. If all equipment of a certain type requires a test, list the equipment description and the number of systems to be tested in parentheses. The NJ number designates the Section in the Appendix of the Nonresidential ACM Manual that describes the test. Also indicate the person responsible for performing the tests (i.e. the installing contractor, design professional or an agent selected by the owner). Since this form will be part of the plans, completion of this section will allow the responsible party to budget for the scope of work appropriately.

Building Departments:

Systems Acceptance. Before an occupancy permit is granted for a newly constructed building or space, or a new space-conditioning system serving a building or space is operated for normal use, all control devices serving the building or space shall be certified as meeting the Acceptance Requirements for Code Compliance. In addition a Certificate of Acceptance, MECH-1-A, Forms shall be submitted to the building department that:

A. Certifies plans, specifications, installation certificates, and operating and maintenance information meet the requirements of §10-103(b) and Title 24 Part 6.

Test Description	Test Performed By:
LTG-2-A: Lighting Control Acceptance Document x Occupancy Sensor Acceptance • Manual Daylight Controls Acceptance • Automatic Time Switch Control Acceptance Equipment requiring acceptance testing: Occupancy Sensor	Contractor
☐ LTG-3-A: Automatic Daylighting Controls Acceptance Document Equipment requiring acceptance testing	

2005 Nonresidential Compliance Forms — April 2005

CERTIFICATE OF COMPLIANCE (Part 2 of 4) LTG-1-C

PROJECT NAME: Performing Arts Center HVAC Upgrade — DATE: 6/15/2007

INSTALLED INTERIOR LIGHTING POWER FOR CONDITIONED AND UNCONDITIONED SPACES

	INSTALLED WATTS
INSTALLED LIGHTING, CONDITIONED SPACES (From LTG-2-C)	136
PORTABLE LIGHTING (From LTG-3-C)	+ 0
LIGHTING CONTROL CREDIT, CONDITIONED SPACES (From LTG-4-C)	- 0
CONDITIONED SPACE ADJUSTED INSTALLED LIGHTING POWER	= 136
INSTALLED LIGHTING, UNCONDITIONED SPACES (From LTG-2-C)	0
LIGHTING CONTROL CREDIT, UNCONDITIONED SPACES (From LTG-4-C)	- 0
UNCONDITIONED SPACE ADJUSTED INSTALLED LIGHTING POWER	= 0

ALLOWED INTERIOR LIGHTING POWER FOR CONDITIONED SPACES

☐ COMPLETE BUILDING METHOD (from LTG-5-C)
x AREA CATEGORY METHOD (from LTG-5-C)
☐ TAILORED METHOD (from LTG-5-C)

ALLOWED LIGHTING POWER — ALLOWED WATTS: 156

ALTERNATE COMPLINCE

☐ PERFORMANCE METHOD
☐ COMMON LIGHTING SYSTEM (from LTG-8-C)

ALLOWED INTERIOR LIGHTING POWER FOR UNCONDITIONED SPACES (From LTG-5-C): 0 Watts

MANDATORY LIGHTING MEASURES FOR INTERIOR LIGHTING AND DAYLIT AREAS

MANDATORY INTERIOR AND DAYLIGHTING AUTOMATIC CONTROLS

CONTROL LOCATION (Room #, Area #, or Description)	CONTROL IDENTIFICATION	CONTROL TYPE (Auto Time Switch, Dimming, Photosensor, etc.)	SPACE CONTROLLED Lists the location of controlled lights	x If Control is for Daylighting	NOTE TO FIELD
SEE DWGS			SEE DWGS		

2005 Nonresidential Compliance Forms — April 2005

LIGHTING MANDATORY MEASURES

- ● **Building Lighting Shut-off**
  The building lighting shut-off system consists of an automatic time switch, with a zone for each floor: or
  the building is separately metered and less than 5,000 square feet; exempt from the shut-off requirement.
- ○ **Override for Building Lighting Shut-off**
  The automatic building shut-off system is provided with a manual accessible override switch in sight of the lights. The area of override is not to exceed 5,000 square feet.
- ● **Automatic Control Devices Certified**
  All automatic control devices specified are certified, all alternate equipment shall be certified and installed as directed by the manufacturer.
- ● **Fluorescent Ballast and Luminaires Certified**
  All fluorescent fixtures subject to certification and specified for the projects are certified.
- ○ **Tandem Wiring for Two-Lamp Ballast**
  All one and three fluorescent fixtures are tandem wired with two (2) lamp ballast where required by Standards Section 132; or
  All three lamp fluorescent fixtures are specified with electronic high-frequency ballast's and are exempt from two-lamp tandem wiring requirements.
- ● **Individual Room/Area Controls**
  Each room and area in this building is equipped with a separate switch or occupancy sensor device for each area with floor-to-ceiling walls.
- ● **Uniform Reduction for Individual Rooms**
  All rooms and areas greater than 100 square feet and more than 1.0 watts per square foot of lighting load shall be controlled with Bi-level switching for uniform reduction of lighting within the room.
- ○ **Daylit Area Control**
  All rooms with windows and skylights, that are greater than 250 square feet, and that allow for the effective use of daylight in the area shall have 50 percent of the lamps in each daylit area controlled by a separate switch; or
  The effective use of daylight throughout cannot be accomplished because windows are continuously shaded by a building on the adjacent lot. Diagram of shading during different times of year is included on plans.
- ○ **Control of Exterior Lights**
  Exterior mounted fixtures and served from the electrical panel inside the building are controlled with a directional photo cell control on the roof and a corresponding relay in the electrical panel.

AEPC Group, LLC
DESIGN • CONSTRUCTION • MANAGEMENT
Northern California Office
5000 Executive Parkway, Suite 475
San Ramon, CA 94583
Telephone: 925-277-3050 / Facsimile: 925-824-0102

ROOFING:

GALE
Gale Associates, Inc.
Engineers and Planners
2570 W. El Camino Real | Suite 320
Mountain View, Ca 94040
P 650.941.1112 F 650.941.1154 www.gainc.com
Boston Baltimore Orlando San Francisco

Registration Stamp

Client:

CITY OF SUNNYVALE CALIFORNIA

Project:

CITY of SUNNYVALE
PERFORMING ARTS CENTER & CREATIVE ARTS CENTER HVAC UPGRADE & ROOF REPLACEMENT PROJECT

PROJECT NUMBER: PR-08/03-08

Issued for

No.	Description	Issue Date
	RECORD SET	5-9-08

Designed by:		Date:
Checked by:		Date:
Drawn by:		Date:
Approved by:		Date:
Project #:	SUNY-8-061	
Scale:	N.T.S.	

ELECTRICAL PARTIAL FIRST FLOOR PLAN, TITLE 24 & PANEL SCHEDULE

Drawing Number:

PA-E2.2

FILE: J:\AE\Project Files\SUNY Projects\SUNY-8-061 Theater-Craft HVAC Upgrade\Cad\Current\Theater Building\SUNY-8-061-PA-E2.2.dwg Jan 30, 2012 - 10:52am $(GETVAR,??) sshanley
XREF: SUNY-THEATER-XBRD.dwg X-FIRST-FLOOR.dwg X-FIRST-FLOOR RCP.dwg