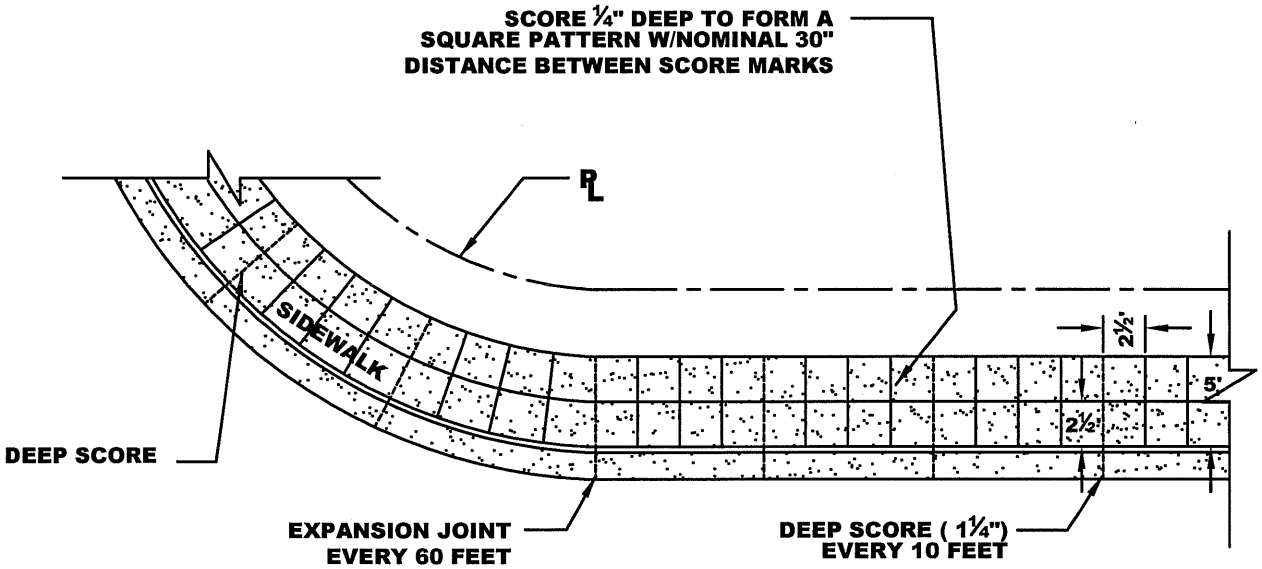


**PLAN VIEW**
NO SCALE

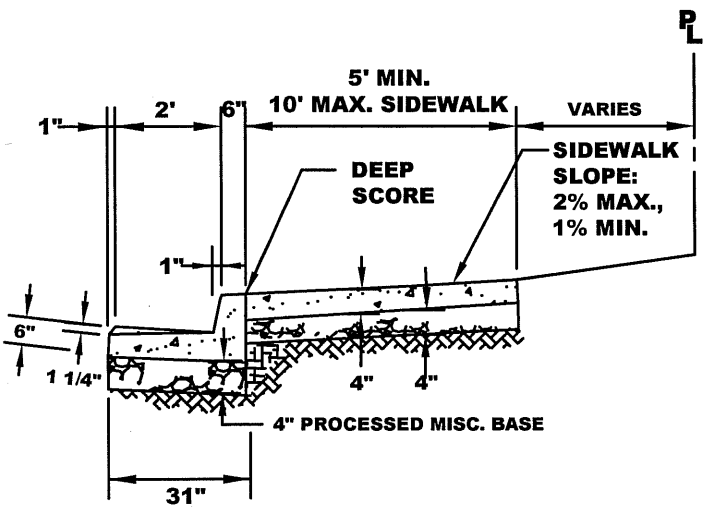


**NON-MONOLITHIC SECTION**
**(FOR NEW CONSTRUCTIONS)**

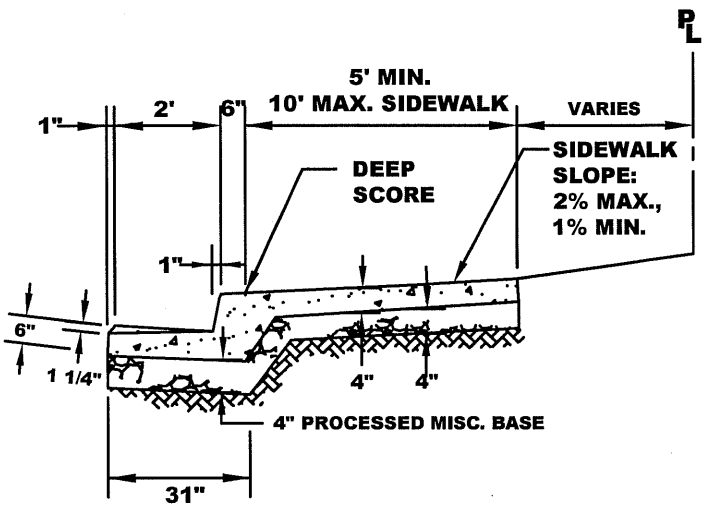


**MONOLITHIC SECTION**
**(ACCEPTABLE SUBJECT TO CITY'S APPROVAL)**

**NOTE:** SEE STANDARD DETAILS 13F & 14F FOR INSTALLATION OF ROOT BARRIER, IF CITY DETERNINES ROOT BARRIER IS NECESSARY.

WHEN REPLACING EXISTING CURB W/ NEW, REPLACE PRE-EXISTING CURB MARKS & PAINT (ESPECIALY THOSE MARKS IDENTIFYING SEWER OR VALVE FEATURES).
USE 1 PINT LAMPBLACK PER CUBIC YARD OF CONCRETE

| | | |
|---|---|---|
| **CURB, GUTTER & SIDEWALK SECTION** | APPROVED BY: | |
| | DATE : JUNE 30, 2006<br>REVISED : SEPT, 2006 | DWG. 9C |

2006 STANDARD DETAILS